GEMÜ® news

Magazine for the customers, partners and friends of the GEMÜ Group

Edition 02/2014

Innovative power, quality and customer proximity

Knowing and understanding the past is important when seeking to shape the future. 50 years of GEMÜ was therefore a reason for us to reflect on the company's history and work on the vision for the next half century.

New challenges can only be accepted and overcome by reviewing what has gone before, including previous experience, and then drawing the right conclusions. The level of competition has increased for all companies in virtually all sectors over the last few years. The days of companies competing solely based on price are over. In future, focus will increasingly shift to competition in innovation. Only innovative companies are capable of growing faster than their competitors in the long term and achieving greater margins by refusing to concentrate exclusively on price competition. We are investing in, and relying on, our creative employees in this regard. After all, we have stood for precisely this innovative power, as well as the quality of our products and our customer proximity, for 50 years.

With 24 subsidiaries and a tight-knit network of commercial partners, we have operations on every continent. Each of GEMÜ's three European manufacturing sites focuses on a specific field of expertise. The stainless steel products are manufactured in Germany, the plastic products come from the production centre in Switzerland and our French manufacturing operations are responsible for elastomer parts. In addition to this, products for the US market are adapted locally in the US, while special products for the respective local market and standard products for the entire GEMÜ Group are produced both in China and Brazil.

We have already been supplying our European customers via the European Production and Logistics Centre in Kupferzell since 2013. We are now transferring the knowledge and experience we have gained in this endeavour to the Asian market. The Asian Production and Logistics Centre in Shanghai will be ready to commence operations early next year. Aside from this, the process for founding a new sales company in Mexico to intensify our activities and expand our market share in this country is also underway. We see great opportunities for our core business here. This intelligent location policy allows GEMÜ to be close to the market, and thereby close to its customers too.

Our vision for the next 50 years is not based simply on hitting a specific figure in year X. Instead, we are keen to improve in areas where we are already enjoying success, while at the same time considering visionary approaches that will allow us to develop new markets in the future and offer our customers a genuine advantage. Our curiosity and our flexibility enable us to react to market requirements in a fast and targeted way, realigning activities where necessary. Working with our valued customers and our motivated and qualified workforce, we look forward to achieving the goals we have set ourselves and promoting both growth and prosperity for everyone involved.

Gert Müller
Managing Director/Partner
Engineering & Sales

Stephan Müller
Managing Director
Finance & Operations

GEMÜ Denmark praised by financial newspaper Børsen

Danish financial newspaper Børsen votes each year for the few so-called "Gazelle" companies among the 500,000 Danish companies. This year, GEMÜ Denmark is among the award winners and has been praised for its extraordinary business development.

The prerequisite for the "Gazelle" prize is that the company in question has doubled its turnover over the last four years and has also achieved a certain amount of turnover. GEMÜ Denmark has exceeded these parameters and was therefore distinguished by the financial newspaper Børsen as a "Gazelle" company.

"Our headquarters in Ingelfingen and the impressive products featuring German quality made a crucial contribution towards the success of GEMÜ Denmark. In addition, we have optimised our internal structures and procedures in recent years," explained Stefan A. H. Holmgren, Office Manager in Denmark. He accepted the award on 29th October 2014, on behalf of all employees of GEMÜ Denmark. "In addition to the pharmaceuticals market, we are currently focusing on the industrial area. Our butterfly valves and ball valves for this sector provide the optimal solution for many applications," explained Stefan A. H. Holmgren.

GEMÜ ApS in Denmark

The Danish subsidiary GEMÜ ApS was founded in 2007 and is based in Ballerup near Copenhagen. It is the 15th subsidiary of the GEMÜ group, which has 24 locations around the globe.
At present, four employees are working in External Sales. They are actively supported by three colleagues in Internal Sales.

Contact:
Stefan A. H. Holmgren
Office Manager GEMÜ Denmark
stefan.holmgren@gemue.dk

Innovative methods for freeze-drying pharmaceutical products

GEMÜ 490 butterfly valve plays a key role

Many pharmaceutical manufacturing procedures are based on bio-technological processes. Often, their molecular structure is extremely complex and their liquid form is unstable, which is why many bio-pharmaceuticals cannot be stored directly. Freeze-drying is the gentlest procedure for conserving the active ingredient solution.

Conventional freeze-drying

During conventional freeze-drying (lyophilization), the active ingredient solutions are typically filtered and filled into so-called vials, for example, along with additives. Among other things, the additives help stabilization, thereby protecting the product during the freeze-drying process. They also ease subsequent reconstitution* by the administering doctor.

In the dry-freezing plant, the solution is deep-frozen in the vials stored in utility spaces, initially at temperatures around -60 °C. A vacuum is then applied and the temperature is increased successively, thereby extracting liquid from the frozen solution (sublimation**). After the final drying procedure, during which the remaining, non-frozen liquid molecules are removed, freeze-dried powder is left in the vials. This means that the pharmaceutical preparation retains its bioactivity and can often be kept for several years. This time-consuming process takes up to several days. Before the compounds can be used, they must be dissolved in a solvent (reconstitution) and can then be injected.

Disadvantage of previous freeze-dried products

There is little or no flexibility with regard to the quantity of pharmaceuticals to be preserved, as the vials must be used during this freeze-drying process. Consequently, if a different quantity of the active substance is required in the final product, i.e. in the vial, this would have to be added in liquid form. Furthermore, the compound does not freeze homogeneously in the vial, so that dosing is difficult, which is already a problem due to the poor flow characteristics of the freeze-dried product. In addition, handling the vials is logistically challenging.

Dynamic freeze-drying of bulkware

In order to combat these disadvantages, the company Meridion developed an innovative technology which makes it possible to freeze-dry pharmaceuticals in bulk. The process is divided into the following steps:

- **Transfer of spray liquid**
  The active ingredient solution, which already contains additives, is fed into the precision nozzles of a cooling tower.
- **Drop formation**
  The medium is atomized in the container. Simultaneously, a resonant frequency is superimposed which makes the droplets the same size. As a result, 3000 to 4000 droplets are generated, created per nozzle and second.
- **Freezing the droplets to microspheres**
  While the drops pass through the cooling tower (-80 to -120 °C) from the top downwards as a result of gravity, the frozen round particles (microspheres) are continuously fed into a pre-cooled rotation freeze-dryer which is under the cooling tower.
- **Freeze-drying**
  The globules are lyophilized under vacuum and are continuously and gently blended. The sublimation energy – the required energy to extract the globules of liquid – is supplied via IR radiation and temperature-controlled drum surfaces.
- **Draining/filling**
  Closed draining is then carried out in the bulk container.

GEMÜ 650 diaphragm valve

GEMÜ 4222 combi switchbox

GEMÜ 490 butterfly valve with pneumatic actuator

Advantages of dynamic freeze-drying

- Dust-free product with good flow characteristics
- Higher drying speed
- Variable batch quantities
- Flexibility in production, with primary packaging materials (e.g. vial) and during formulation
- No handling of vials
- Combination of different lyophilized products

GEMÜ 490 butterfly valve

The GEMÜ 490 butterfly valve has a key role. After the frozen globules have fallen through the cooling tower and are collected in the freeze-dryer, the butterfly valve closes upwards and the vacuum can be applied. The butterfly valve in DN 200 with stainless steel body must withstand a temperature of -80 °C and remain sealed under a high level of vacuum (up to 10 µbar) – but simultaneously be suitable for steam pressure sterilization conditions (2 bar, > 121 °C), as it is a sterile system.

Other GEMÜ 650 diaphragm valves with combi switchbox 4222 with integrated 3/2-way pilot valve are used for purification processes .

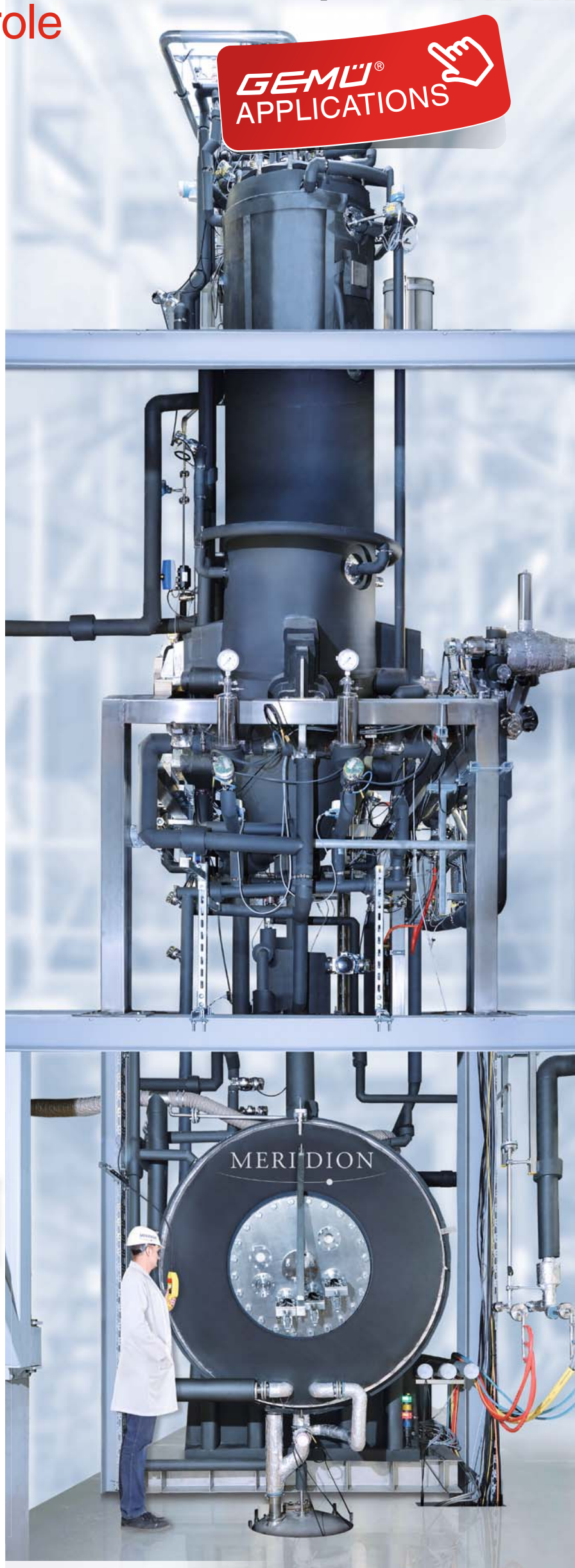

Dynamic freeze-dryer

*Delivery of the finished medicinal product in its ready-to-use form just before use

**Transition of a substance from solid to gaseous aggregate state

Contact:
Mareike Monninger
Sales Marketing
mareike.monninger@gemue.de

Individualised standard products
for processes in the foodstuff industry

GEMÜ is among the global market leaders in valves for sterile applications, particularly in the pharmaceutical and biotechnology industries.

Globe and control valves from GEMÜ have a very wide range of uses. These range from the pharmaceutical and biotechnology industries, through food and beverage industries, to plastics processing and water treatment. Among other things, the valves are used in heat exchangers, for controlling steam and sterile air, in filling processes and in steam control, as well as in the control of gases, for example nitrogen.
Globe valves are especially suited to automated tasks with numerous cycle duties and high switching frequency. In conjunction with the corresponding positioners or process controllers, they can also be used very well as control valves. Depending on the requirements, valves are used with a straight seat or angle seat design and corresponding flow restrictors.

From the GEMÜ modular system

Depending on their design, GEMÜ globe valves can be used at operating pressures of up to 40 bar and a maximum operating temperature of 180 °C as standard. Vacuum compatibility is given up to a value of 20 mbar (abs).
Many customers prefer pneumatic or manual operation, however, motorized versions are becoming increasingly popular. An individualised standard product can be generated from the GEMÜ modular system, depending on customer requirements and planned application. Different materials and designs are available not only for the actuator components, but also for the valve bodies.
For processes in the pharmaceutical industry and foodstuff industry, stainless steel actuators and valve bodies are preferably combined with a PTFE seat.

In addition to a number of different connections and nominal sizes, GEMÜ customers can also choose from ultra-high quality surfaces with a grade of up to Ra ≤ 0.4µm.
In addition to the standard globe valves from the GEMÜ 530, 534, 550 and 554 series, the product range includes a special pure steam valve (GEMÜ 555) with stainless steel bellows and reduced dead spaces. For process automation, GEMÜ also offers its customers a corresponding selection of electrical position indicators and positioners or process controllers.

GEMÜ 550 globe valve with GEMÜ 1434 µPos® positioner

Contact:
Automation Department
auto@gemue.de

Steam sterilisation of solids
GEMÜ globe valves and ball valves in use

The combined influence of steam and pressure allows micro-organisms to be inactivated or removed. In steam sterilisation there are special requirements on the valves employed, which is why the GEMÜ 550 globe valve and GEMÜ 751 ball valve are used.

The steam sterilisers currently under construction by Holzner will be deployed at a large pharmaceutical company. Among other things, they will be used to sterilise cages and animal feed and drink solutions for the purposes of animal research. The advantages of steam sterilisation are low environmental impact, good controllability and a relatively good cost-benefit ratio. Furthermore, after sterilisation, no toxic residues are left on the sterilised material.

Requirements of the sterilisation material

The material must first be thoroughly cleaned to reduce bacterial exposure to a minimum before the sterilisation process is initiated. It also has to be pressure-resistant and heat-resistant. Safe, reproducible steam sterilisation which can be validated is only possible if there is free access to all external and internal surfaces of the product for the steam. This involves opening containers or lab equipment and dismantling complicated instruments. In addition, the material must not be packed in the baskets too tightly.

Venting the sterilisation chamber

The sterilisation chamber must be completely vented before the actual sterilisation process. Efficient steam sterilisation can only be ensured if the steam has fully displaced the air in the chamber. When sterilising solids, the fractionated pre-vacuum is a proven method that is predominately used in modern sterilisers. Here, air is sucked out of the chamber via the GEMÜ 751 ball valve using a vacuum pump and is replaced with steam. This process is repeated several times. Finally, steam is added until the required operating pressure is reached. GEMÜ 550 globe valves are fitted in the steam and air lines.

Sterilisation and drying

Sterilisation is typically performed at 121 °C for 20 minutes or at 134 °C for 5 minutes. If the saturated steam condenses on the sterilised material, thereby emitting energy, the protein in the cell is destroyed. It is essential that this heat is damp. While it is possible to sterilise with dry heat, considerably higher temperatures and longer exposure times are required. Once the sterilisation process is completed, the steam is vacuumed off and the chamber is evacuated to 120 mbar in order to dry the product. Any existing condensate evaporates due to the vacuum and is discharged via the vacuum line and GEMÜ 550 globe valves. Pulsated drying, during which the air is fed into the system in phases, has proven itself to be a tried and tested method. Before discharging, the chamber is cooled and pressurized with cooling water via the jacket. GEMÜ 751 ball valves with female thread are used to cool the jacket.

Contact:
Mareike Monninger
Sales Marketing
mareike.monninger@gemue.de

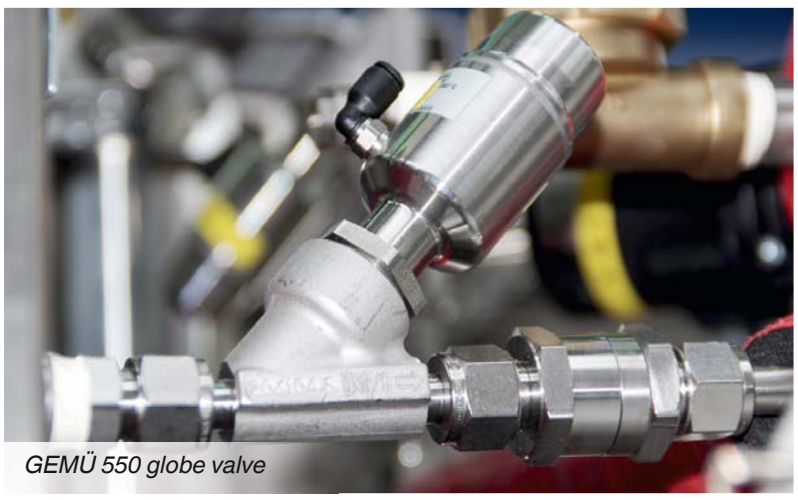

GEMÜ 550 globe valve

GEMÜ 550 globe valves in the condensate line

IMPRINT
Publisher:
GEMÜ Gebr. Müller Apparatebau GmbH & Co. KG
Fritz-Müller-Straße 6–8
74653 Ingelfingen-Criesbach
Phone +49 (0) 7940/123-0
gemuenews@gemue.de
www.gemu-group.com
Editors:
Annette Wenk (Text)
Birgit Seuffert (factum I adp)
Gabriela Mildner (GEMÜ)
Eva Zink (GEMÜ)
Circulation:
4,000 in German
2,000 in English

GEMÜ® APPLICATIONS

Small cause, great effect
Sophisticated selection of suitable valve technology

All of the processes and procedures with which we are familiar use technologies to monitor substance and material flows. We generally refer to this as valve technology. Whether we are dealing with liquids, gases, solids or a mixture of these media, every situation has specific process engineering requirements.

Compared to other components and plant components, valve technology is not considered to be particularly important. This may be because valves do not generally constitute more than one to three per cent of the total asset value. But if we consider that, in the worst case scenario, the failure of a single valve can bring an entire production plant to a standstill, it is obvious that the topic of valve technology should be given the attention it deserves and that it is important right from the start to choose the right type of valve and the appropriate materials, and to adapt the function to the prevailing operating parameters. It is not uncommon for plants and installations to be designed for a lifetime of 25 to 30 years. With these long operating times, small details such as the torque or force to be applied in order to operate valves, flow rate valves, pressure loss, resistance to wear and the service life of the valves used can sometimes have a huge impact. Over time, this can result in substantial extra costs.

GEMÜ butterfly valves at the Niedernhall waterworks in nominal sizes up to DN 150

Rotary or quarter turn valve

Several criteria are taken into consideration when choosing the best valve technology for a specific process. For example, when choosing the type of valve, we distinguish between rotary and quarter turn valves. The difference is that quarter turn valves can be opened and closed with a single 90° rotation, while rotary valves require several rotary movements to fully open or close them.

Where solids, slurries or media containing solids in suspension are involved, mechanical wear (abrasion) and deposits in the system are often the cause of failures. A full-bore design and, where possible, no moving parts in the valve are important features when considering how best to deal with these types of operating conditions. Suitable valve types to be considered here include diaphragm valves (in the full-bore or weir type valve design), knife-gate valves and pinch valves. Ball valves are also sometimes used, for example when slurries need to be conveyed over long distances or with high pressure. However, the above-mentioned valve types with full-flow bore can quickly reach their limits, despite all their features and advantages.
As soon as additional requirements such as controllability, versatility in the choice of materials, installation size, space requirements and investment costs of the valve need to be considered, it is often necessary to compromise and use alternative technologies. These valve types are now rarely used above a nominal size of DN 300, either because they are no longer available on the market, or because they are very bulky and also very expensive. Only knife-gate valves can still keep up here due to their narrow installation width.

Adaptable solution

Compared to other valve technologies, butterfly valves have key characteristics. Out of all the valve types, they have by far the greatest versatility when it comes to adapting the valve to the operating conditions (materials, connections, operator types, control characteristics, etc.). Another feature, which also applies to other valve types, is the two-way flow direction of the medium through the obturator. Due to its short construction, and the design and shutting-off principle, the butterfly valve is the most cost-effective and adaptable solution. Advantages such as the small and light design make it easier to install and service, particularly if large nominal sizes are required. Many of the valve types previously mentioned cover the nominal size range of DN 15 to DN 300.
In comparison, the largest butterfly valves being made today have already reached a nominal size of DN 4000. Depending on the operating conditions required (pressure, temperature and type of medium), we can differentiate between concentric and eccentric butterfly valves. The sealing principle of concentric butterfly valves is based on the penetration of the disc in a liner that is manufactured from elastomer which has been adapted to the relevant conditions. The most frequently used elastomers are EPDM, NBR and FPM. Various other elastomeric materials are also used, whereby the optimum material is chosen based on the conditions of use.

GEMÜ Victoria® concentric butterfly valve with elastomer seat, available in nominal sizes DN 25 to DN 600

Source: Verfahrenstechnik
Edition 9.2013
Vereinigte Fachverlage GmbH
Text: Claudio Darpin,
Managing Director GEMÜ South Africa

Butterfly valve test rig at the GEMÜ research centre: Here, customised valve designs can be tested.

Internal and external tightness

The elastomer liner, or seat, is the heart of a concentric butterfly valve. Properties such as internal and external tightness, the force required for opening and closing (torque), the service life of the butterfly valve and, last but not least, costs primarily depend on the physical-chemical properties of the elastomer and on the geometry of the seat. A deciding factor in whether the valve is considered high quality or cost-effective is the secure anchoring of the elastomer lining in the valve body.

The nature of the sealing surface of the disc, the design of the pin ends and the way in which the disc geometry matches the liner mould are further criteria which determine the torque and tightness of a butterfly valve. In order to address the specific conditions, such as system pressure – particularly where work is carried out in a vacuum and a high switching frequency at increased temperatures is also required – it is beneficial to glue the liner to the body or to fix it to the body through vulcanisation.

Soft-sealing butterfly valves are used at an operating pressure of up to 25 bar. The maximum media temperature is approx. 140 °C. This is very much dependent on the elastomer material, medium, system pressure, size of the butterfly valve and switching frequency. Where there are additional requirements, such as high corrosion resistance in particular, as is often required in the chemical industry, or applications where the elastomeric materials can no longer withstand the current conditions, a combination of the soft-sealing principle coupled with the use of PTFE or copolymers of PTFE (e.g. PFA and TFM) is used. In terms of corrosion resistance, PTFE and PFA have practically no limitations. A prime example of this is the extraction of chlorine in electrolytic procedures.

In cases such as these, where the requirements relating to corrosion are so high and safety is exceptionally important, PTFE butterfly valves with a titan disc are used. The temperature stability is also far higher than on conventional soft-sealing butterfly valves. An additional advantage of PTFE butterfly valves is that they can be used in the high purity segment. For applications in which no foreign matter must be passed on to the medium, materials such as PTFE, TFM and PFA are particularly good as they contain no additives that can leach out.

Explosion-protected components

If there is a requirement to comply with ATEX directives, the TFM liner and, in the case of PFA-coated discs, the PFA are enhanced with graphite, which gives the polymer electrical conductivity. This means that electrostatic build-up and therefore discharges such as sparks can be avoided.

Double or triple eccentric butterfly valves – otherwise known as HP butterfly valves (high performance) – are used to cover the area of application outside the capabilities of the elastomer materials, i.e. at temperatures between – 100 °C and + 500 °C and at high pressures. Typical areas of application are saturated steam, hot water, corrosive and hot gases from combustion processes and roasting processes, bitumen or cryogenic applications. The sealing principle of HP butterfly valves differs from that of concentric valves since the rotation of the disc in one direction is offset from the geometric middle of the valve, resulting in a different type of rotary movement.

In order to achieve the longest possible service life for butterfly valves and other types of valves, we must know the exact process conditions and define a solution that is adapted to these. The pressure-temperature diagram, which specifically shows the limitations of use for each valve type, is important here.

Contact:
Industrial Department
industry@gemue.de

GEMÜ Sweden well-established in municipal water management

The VA-mässan trade fair is the largest meeting place of its kind in Sweden for engineers, technicians, service personnel and purchasers in the municipal water and waste water treatment sector. GEMÜ Sweden attended the trade fair for the second time this year. As a specialist in valves, measurement and control systems, it's an event GEMÜ couldn't afford to miss.

The VA-mässan took place this year from 30 September to 2 October in Elmia in Jönköping. GEMÜ Sweden exhibited its wide range of products for municipal water and waste water applications. Once again, the aim this year was to make a number of new contacts with construction and engineering companies as well as with OEMs and end users. Numerous companies, with whom GEMÜ already has working relations, also took the opportunity to visit our exhibition stand. "We can draw on very positive feedback", says Lars Hillgren, Head of Sales Nordic Countries.

As GEMÜ Sweden is looking to establish itself further in the municipal water and waste water treatment sector, a number of targeted measures have been taken in recent years. Participation in the VA-mässan is a part of this strategy.

Lackarebäck waterworks Göteborg

A good example of the benefits of taking part in trade fairs is the possibility to meet customers like the company Purac. Purac appointed GEMÜ Sweden as one of the main suppliers for the Lackarebäck waterworks in Göteborg. The scope of delivery comprises almost 200 valves, ranging in size from DN 100 to DN 600, including GEMÜ 480 Victoria®, both manually and pneumatically operated, and check valves. The Lackarebäck waterworks is currently one of the largest waterworks for drinking water in Europe. It supplies Göteborg with 180,000 m³ of water daily. The waterworks uses a very special water filter to ensure that very small organisms, such as the parasite cryptosporidium, can be eliminated. The filter system contains more than 40,000 km of extremely finely perforated tubes, through which the water must flow, filtering out the smallest particles. This technology is already well-known in larger European cities, however this is the first time that the system is being used in Sweden. "Now that we have established ourselves as a supplier for Purac, we hope that we can tender successfully for similar projects in the future, as this technology will be used increasingly to counteract new parasites and viruses appearing in drinking water", says Lars Hillgren.

Contact:
Lars Hillgren
Head of Sales Nordic Countries
lars.hillgren@gemu.se

Exhibitions 2015

Interphex Osaka	04.02. – 06.02.	Osaka (JP)
Semicon Korea	04.02. – 06.02.	Seoul (KR)
ExpoSolidos	17.02. – 19.02.	Barcelona (ES)
Cfia Rennes	10.03. – 12.03.	Rennes (FR)
M+R	11.03. – 12.03.	Antwerpen (BE)
Semicon China	17.03. – 19.03.	Shanghai (CN)
Pharma-Kongress	24.03. – 25.03.	Düsseldorf (DE)
Anuga FoodTec	24.03. – 27.03.	Köln (DE)
Cippe	26.03. – 28.03.	Peking (CN)
Korea Pack	17.04. – 24.04.	Seoul (KR)
Interphex USA	21.04. – 23.04.	New York (USA)
Wetex	21.04. – 23.04.	Dubai (AE)
Hispack	21.04. – 24.04.	Barcelona (ES)
MSR Spezial Chemiedreieck	22.04.	Halle (DE)
VisionPharma	19.05. – 21.05.	Stuttgart (DE)
Interphex Singapore	01.06.	Suntech City (SG)
SEPEM Industries Avignon	02.06. – 04.06.	Avignon (FR)
Fooma Japan	09.06. – 12.06.	Tokio (JP)
Achema	15.06. – 19.06.	Frankfurt (DE)

Innovative stainless steel globe valve for controlling small volumes

GEMÜ® PRODUCT

GEMÜ further expands its expertise in the control valve sector with the innovative Type GEMÜ 566 globe valve.

The GEMÜ 566 stainless steel globe valve has a valve body in which the control mechanism is already integrated. In addition to a pneumatic actuator, there is also a manually operated version and a motorized version.
By integrating the control mechanism into the valve body, it is possible to subsequently switch from a manual actuation type to an automated actuation type at any time. The particular advantage of this is that the components involved are located outside the medium-wetted area. This means that from the start, the plant operator enjoys a very high degree of flexibility with regard to potential changes to their operational processes. The medium-wetted part is separated from the control mechanism by an additional separating diaphragm. The diaphragm is available in EPDM or FPM materials. The investment casting, stainless steel valve body has a threaded socket and is available in the nominal sizes DN 8 to DN 15.

The GEMÜ 566 valve was developed especially for controlling small volumes and provides a flow rate from 63 up to 2500 l/h. For all three actuation types, there are options for optical and electronic position feedback. The motorized version can also be equipped with a positioner. The same applies to the pneumatic actuator, for which a process controller is also available as an optional extra.

GEMÜ 566 manually operated

GEMÜ 566 pneumatically operated with GEMÜ 1434 µPos® positioner

GEMÜ 566 motorized

Contact:
Automation Department
auto@gemue.de

Globe valve with membrane actuator adept at control tasks

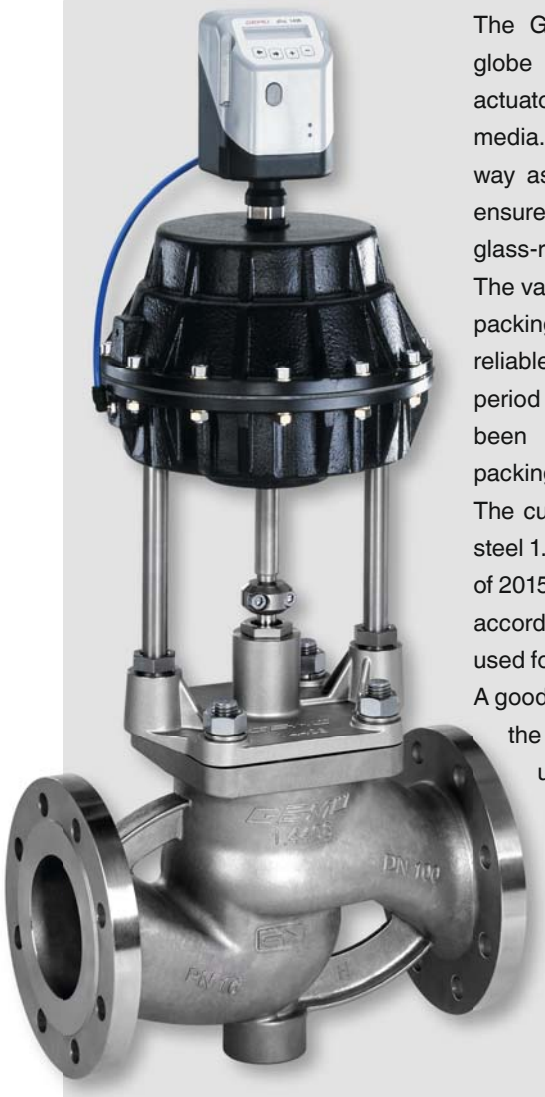

GEMÜ 536 globe valve with GEMÜ 1436 cpos® process controller

The GEMÜ 536 pneumatically operated 2/2-way globe valve has a low maintenance membrane actuator which can be controlled by inert gaseous media. The valve plug is fixed to the spindle in such a way as to allow flexing during closure in order to ensure tight shut off. Steel and PTFE as well as a fibre glass-reinforced PTFE version are available as seats. The valve spindle is sealed by a self-adjusting gland packing. This provides a low-maintenance and reliable valve spindle seal even after an extended period of operation. The wiper ring which has also been introduced additionally protects the gland packing from contamination and damage.
The customer has a choice between cast stainless steel 1.4408 or SG iron GGG40.3 (from the beginning of 2015) for the material of the valve body. A flange in accordance with EN 1092 or ANSI cl. 125/150 RF is used for the piping connection.
A good flow rate and controllability is achieved due to the globe valve design. Standard control caps are used in the control valve design. Thanks to the high-quality design, GEMÜ 536 is also suitable for high operating temperatures and pressures. A version according to ATEX is also available as an option.

Angled valve bodies for globe valves save on space and installation time

For its globe and control valves in the 507, 514, 548, 550 and 554 series, GEMÜ has developed an angled valve body. These are currently available with a "threaded socket" connection type in accordance with DIN ISO 228 (code 1) and NPT (code 3D) in nominal sizes DN 15 to DN 50. As well as the standard version, the valve bodies can also be ordered in a version with a reduced seat. The material used is stainless steel 1.4408.
Using valve bodies with an angled design allows better use of the often limited space available in system configuration. In addition, this type of layout reduces the number of fittings, unions and weld seams, thereby also reducing installation time.

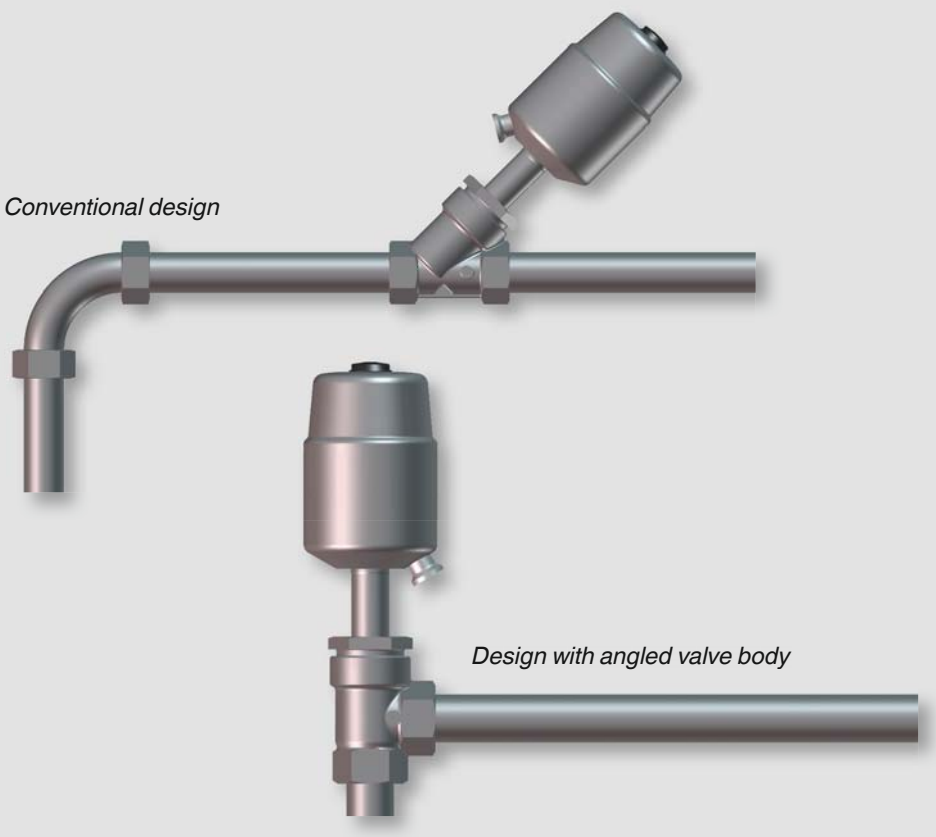

All from a single source
Valve designs in chemical and high purity media supply

In high purity applications and in critical fluid management, high quality and product purity are essential. As a provider of standard components and flexible customer solutions, GEMÜ has established itself as a specialist in the field of valve design.

In many industrial processes, chemical substances in any state of aggregation have become indispensable. GEMÜ offers its customers a wide range of services in chemical supply, particularly in critical fluid management.
The highly resistant valves from the GEMÜ CleanStar® and GEMÜ iComLine® series can be used in all kinds of applications to meet various system requirements. Furthermore, the sealing technology of the iComLine® valve series allows the valves to be assembled as a multi-port valve block solution. As well as providing a layout that makes the most of both space and resources, it also allows the integration of measuring and sensor technology.

Strict purity requirements must be met in all production processes involved in the manufacture and supply of chemicals. The high purity acids and chemicals required for the manufacture of microchips are produced by specialist companies under ultra pure conditions. Valves, tubing systems and measurement devices for the control and monitoring of the media are also subject to these requirements. In this regard, GEMÜ can rely on its own modern cleanroom plant in Switzerland.

For resistance purposes, all medium wetted parts are made of high-quality PFA or PTFE. In addition to valves from the GEMÜ CleanStar® and GEMÜ iComLine® series, other high purity products are available, for use in chemical supply systems among other things.

GEMÜ offers a wide range of PFA fittings and PFA tubing for the distribution and connection of valves and components. The GEMÜ TubeStar® tubing is available as a 400 metre spool and as a 6 metre straight piece in ¼ to 1¼ inch sizes. The GEMÜ FlareStar® fitting range offers over 1,200 variations for creating the appropriate connections in the supply installation.

The GEMÜ SonicLine® ultrasonic flowmeter allows extremely precise measurements, even with very small flow rates. The pressure measurement devices from the GEMÜ HydraLine series have a high-quality pressure sensor and a patented 3-fold diaphragm, which enables a very high degree of accuracy. There are no movable or fixed components in the measured length of any flow meters or pressure gauges, so that the medium can flow unhindered. The GEMÜ product range is completed with automation components such as position indicators and positioners or process controllers.

C31 HydraLine

iComLine®

C60 CleanStar®

FlareStar®

FlareStar®

C38 SonicLine®

TubeStar®

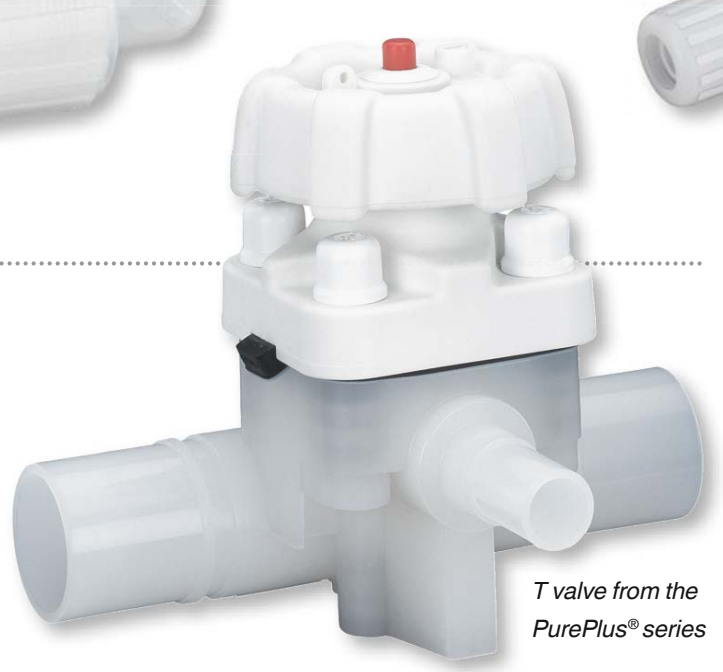

T valve from the PurePlus® series

Contact:
Semiconductor Department
semicon@gemue.de

Uncompromising purity
and resistance to media

Originally developed in close cooperation with users and designers of plant from the semiconductor industry, the diaphragm valves from the GEMÜ PurePlus® series are the perfect choice for high purity and resistance to media.

In the year 1964, Fritz Müller developed a process valve made of plastic. With this valve he created a milestone in the automation of electroplating plant. Just over 25 years later, the first diaphragm valves from the GEMÜ PurePlus® series were launched. Looking back, the company can now reflect on 50 years of expertise in plastics as well as 25 years experience in the manufacture of high-performance plastic valves.
The valves from the GEMÜ PurePlus® series are in use all over the world in the most demanding conditions and across a wide range of applications. They can be found, for example, in the chemical supply of the semiconductor or solar energy industry, the treatment of corrosive waste water, high-purity media supply or water treatment (e.g. DI or UHP water treatment).
The GEMÜ PurePlus® valves have an extremely resistant plastic body made of the materials PVDF or PP. The seals used are made of PTFE. This type of diaphragm valve is manufactured under clean room conditions in the state-of-the-art GEMÜ clean room plant in Switzerland. Depending on customer requirements, the valves can be fitted with different operators (manual, pneumatic, motorized) and various automation components, such as position indicators or positioners. The GEMÜ PurePlus® product range is additionally complemented with variable area flowmeters, which are also made of PVDF.

New intake makes a start

GEMÜ TRAINING

GEMÜ started its new training year on 1 September 2014 with 20 new apprentices and four new students. The first week featured a varied program to help the new intake settle in to this new phase of their lives. The aim of the week was to introduce the company while also helping to build a sense of community among the young people.

The new apprentices and students were welcomed by GEMÜ's Managing Director, Stephan Müller, during an orientation meeting. Afterwards, they met the trainers from the various departments as well as the apprentice spokespersons. This was followed up by a tour in small groups of all the company departments. The apprentices had to complete various tasks, including solving a riddle and learning how to use the telephone system. They also had to learn how to assemble an actuator and check its functionality. After enjoying a shared lunch, the new intake were taken to the GEMÜ Dome in Niedernhall-Waldzimmern for a tour. A casual get-together at the Ingelfinger Fass, followed by a walk through the vineyards back to the company offices in Criesbach, completed the day.

On the second day, the apprentices – who are training, for example, as electronics technicians, industrial mechanics, technical product designers or industrial clerks – were given an introduction to occupational safety, in order to minimise risks at work. "Making the most of your new career" was the subject of an interesting seminar that took place on Wednesday. Thursday morning started with a data protection training course. This was followed in the afternoon by a fascinating tour through the European Production and Logistics Centre in the Hohenlohe business park.

The week drew to a close on Friday with a day out for the apprentices – where the "old" apprentices finally met the "new" ones. The group visited Schwäbisch Hall, where they enjoyed an interesting tour of GEMÜ's customer, Optima, followed by the highlight of the day, the "Highland Games". The apprentices competed against each other in teams, wearing traditional Scottish kilts, and tested their skills, balance and strength across a number of events, including the apple catapult, tossing the caber and milk churns, and the tug-of-war.

Highland Games with tug of war …

… archery

… and tossing the caber

Contact:
Lena-Kristin Hafner
Head of Training/
Personnel Marketing
lena.hafner@gemue.de

Apprentices and students in their first year of study

Avramoff, Alexander	Bachelor of Arts, Industrial Processes
Barabanow, Michael	Machine and plant operator
Bissinger, Felix	Electronics technician for devices and systems
Blattau, Katharina	Industrial clerk
Böger, Fabian	Machine and plant operator
Dewald, Katharina	Warehouse logistics operator
Fischer, Samuel	Tool mechanic
Gottschlich, Marcel	Warehouse logistics operator
Hofmann, Jens	Tool mechanic
Kempe, Benjamin	Electronics technician for devices and systems
Knaus, Pascal	Technical product designer
Kopf, Fabian	Tool mechanic
Krämer, Robin	Tool mechanic
Krajcek, Ines	Bachelor of Engineering, Industrial Engineering and Management, International Technical Sales Management
Masur, Tobias	Cooperative study model, Electrical Technology study programme
Michel, Tobias	Electronics technician for devices and systems
Renner, Maximilian	Bachelor of Engineering, Mechanical Engineering
Roloff, Marc	Tool mechanic
Rumm, Simon	Expert information technician
Senger, Anton	Industrial electrician
Stirn, Mona	Industrial clerk with additional qualifications in international business management
Weber, Max	Tool mechanic
Weigel, Johannes	Electronics technician for devices and systems

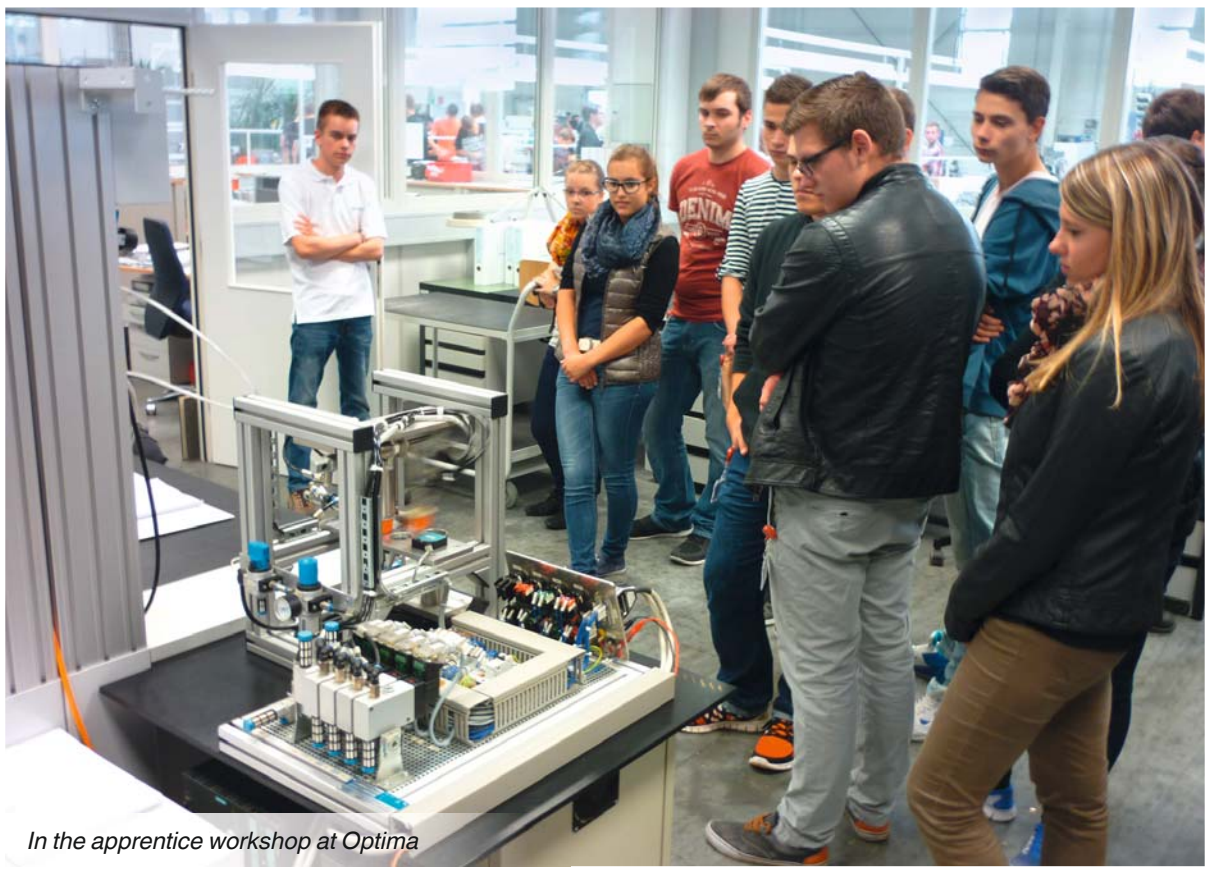

In the apprentice workshop at Optima

Minister Nils Schmid visits
the Production and Logistics Centre Europe

The Finance and Economic Affairs Minister and Deputy State Premier of Baden-Württemberg, Nils Schmid, visited the family-owned enterprise GEMÜ in the Production and Logistics Centre Europe in the middle of September.

Nils Schmid (middle), Gert Müller (left) and Stephan Müller (right) on the tour through the Production and Logistics Centre

The Minister was welcomed by GEMÜ's Managing Directors, Gert Müller and Stephan Müller, after which discussions were held about a number of current issues, including inheritance tax and export controls. Nils Schmid was particularly interested in Industry 4.0 as well as the area of intralogistics. A tour of the Production and Logistics Centre, the newest location of the GEMÜ group, helped illustrate to our guest how this subject is being implemented at GEMÜ. "Logistics processes have become leaner and more efficient thanks to our Production and Logistics Centre", explains Gert Müller. The Minister was given the opportunity during his tour to chat with some of the employees from the assembly and logistics areas.

Nils Schmid regularly visits companies in various regions of Baden-Württemberg. He was in the Hohelohe district in the middle of September. GEMÜ was selected due to its impressive company history: From a one-man, family-owned enterprise to a leading technology company in the valve, measurement and control system sectors. "However, GEMÜ is not just a successful global company: Its commitment to research, to promoting young talent and to social issues is also exemplary", says Nils Schmid.

Contact:
Patrick Hofacker
Management Advisor
patrick.hofacker@gemue.de

Nils Schmid was particularly interested in efficient intralogistics at GEMÜ

Apprentices as learning guides
GEMÜ supports MINTec projects

Once a week, apprentices from GEMÜ become learning guides at the Georg-Wagner school in Künzelsau. As part of the MINTec project, an educational initiative for the promotion of science and technology among children and young people, they help students develop practical areas of technical expertise.

Students of the Georg-Wagner school with their teacher Matthias Maier and GEMÜ apprentices Lukas Müller and Lars Hofmann

"The teacher in charge of the project at the school contacted us and asked us if we could provide support," says trainer Wolfgang Wick. The technology lessons take place every Wednesday afternoon at the school. To enable the students to gain practical, hands-on experience, more than two teachers are needed in the classroom. Now that the GEMÜ apprentices are on board, there are another two learning guides to help show the fifth graders how to understand a construction drawing, or how to get to grips with drills, soldering irons and other tools. "The project always runs for seven sessions," explains Wolfgang Wick. "Then it's the turn of the next school group." At which point, the apprentices from GEMÜ also change over. In the first year, Hendrik Guttzeit and Lukas Müller took part in the school project. They are serving their apprenticeship at GEMÜ as tool mechanics, which is perfect for helping the students with DT.

GEMÜ apprentices and students at work

Enthusiastic apprentices

"It would have simply been too much for two teachers with the class size involved," says Lukas Müller. "We apprentices were able to provide additional help to the students." To help prepare the apprentices, they were given some initial training on working with children. The course was organized by MINTec Hohenlohe. "It was very interesting and a lot of fun," says Hendrik Guttzeit. "It was a new experience for us to work with the children. But they were all very nice and really got stuck in." Wolfgang Wick is also very pleased with how his apprentices have got on. Currently, a second parallel project is starting with the training college in Niedernhall. There will then be four GEMÜ apprentices involved every week as learning guides at the two schools. The schools really appreciate the commitment. Matthias Maier, the course leader for MINTec at the Georg-Wagner school in Künzelsau, expresses his heartfelt thanks for the support. "The GEMÜ apprentices helping as learning guides has really helped to make the "intensive technology project class 5" the great success that it has been this year. The students have been really touched, as have teaching colleagues, school management and parents. Thank you so much for your commitment!"

Contact:
Wolfgang Wick
Head of the Special Engineering department and Training Manager Metals
wolfgang.wick@gemue.de

New record!
85 GEMÜ runners in the ebm-papst marathon

GEMÜ® ACTIVE

For almost 20 years, the ebm-papst marathon has been an established running event in Hohenlohe. In 2014, thousands of runners turned out for the 19th ebm-papst marathon. And among them was a large team from GEMÜ. In the year of the company's 50th anniversary, the motto "50 years, 50 runners" was chosen.

The planned number was far exceeded. In total 85 participants registered for the different disciplines. Most took part in the 10 km race. Six junior talents took to the track for the Bambini race for employees' children. "The ebm-papst marathon is a great event for us," said Managing Director Stephan Müller, who took part in it himself. "Members of staff from all departments and areas get involved. Sporting ambition is of no relevance, but rather the shared fun that everyone has in taking part." He sees a benefit for the entire region, even beyond the event itself. "Events of this kind are an important element in location marketing. They allow us to show applicants from outside the region just how attractive Hohenlohe is in terms of leisure activities too." At GEMÜ, the ebm-papst marathon gains more fans every year. "A few years ago we started with just over ten participants," said Sebastian Naundorf, Management Advisor, who is responsible for organising the participation of GEMÜ runners. "In 2013 we had 39 runners and this year all our expectations were exceeded." The runners were rewarded for their participation. Everyone who took part received a sporty gift in the form of a drinks bottle and hand towel. At the in-house GEMÜ meeting point, the runners were well looked after and were able to have a massage, if they wished.

GEMÜ donates €4,500

In addition, everyone was running for a good cause. For each kilometre run, the company donated five Euros. With a total of 813 kilometres run this year, the considerable sum of €4,065 € was raised. Managing Director Gert Müller rounded this amount up to €4,500. The donation was given in equal portions to the Elterngruppe für Früh- und Risikogeborene Schwäbisch Hall e.V. (parents' group for premature and high-risk births Schwäbisch Hall) and the Hofmann-Haus, a centre for dementia in Künzelsau, for the development of in-house meeting places.
In the overall rankings by kilometres run, the GEMÜ team achieved a remarkable fourth place.

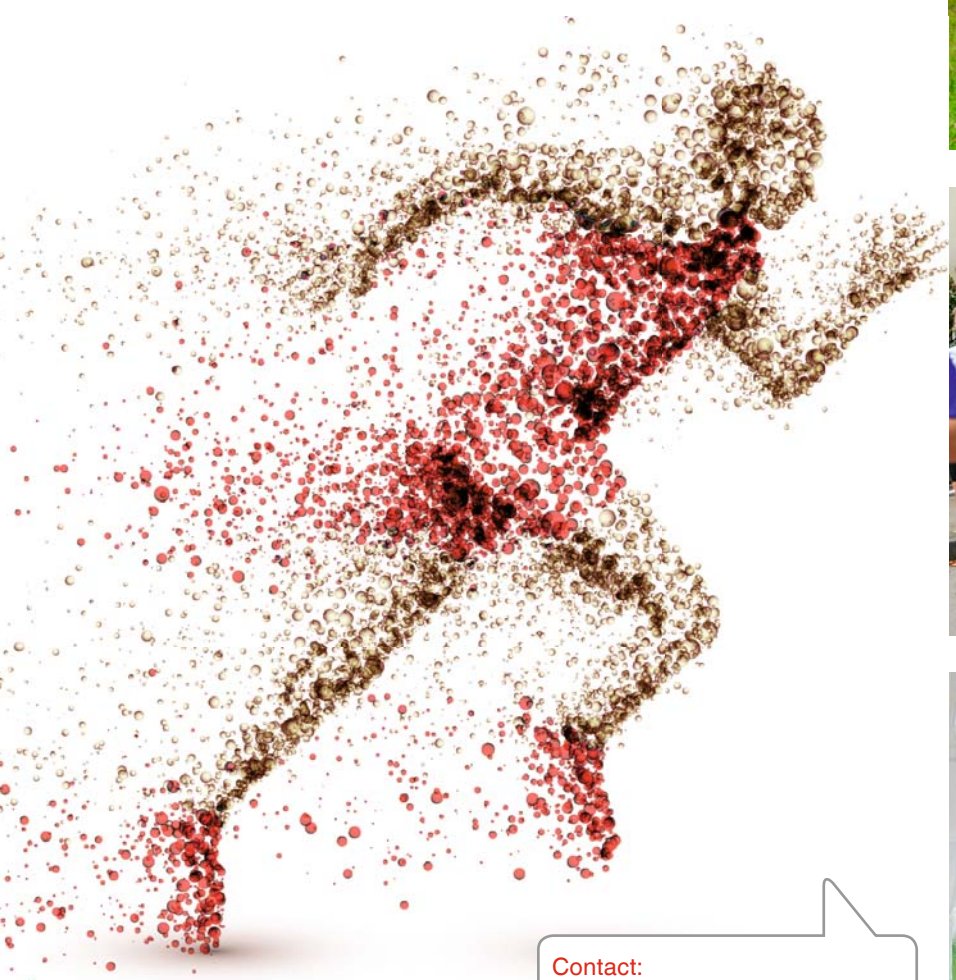

Contact:
Sebastian Naundorf
Management Advisor
sebastian.naundorf@gemue.de