Product application for textile industries

Oxidation protection for textile dyes

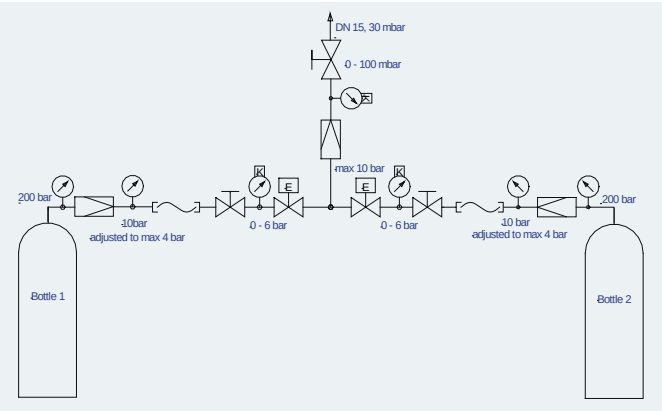

Application

Various substances can react with oxygen rendering them unusable, and amongst these are dyes for the textile dying industries. In order to protect these dyes against oxidation, their supply tanks must be continuously exposed to a nitrogen overpressure. The nitrogen is provided in compressed gas cylinders. An automatic changeover system ensures that the plant changes over to another filled cylinder before the previous one is fully emptied.

System technology

A constant pressure of approx. 100 bar is present in the nitrogen cylinder, but this is initially reduced to approx. 10 bar by a conventional pressure control device on the gas cylinder. After this, it is coupled to the actual gas distribution system and the limit value for the required operating pressure can be set using a pressure gauge. If it falls below the limit value, a motorized butterfly valve is actuated. It opens further and more nitrogen flows into the system. If the filling level of the gas cylinder has reduced to the extent that it has fallen below the limit value despite a fully opened butterfly valve, the control will switch over to a second gas cylinder. The emptied gas cylinder can be replaced by a filled one while the nitrogen flows out of the second. Before this nitrogen enters the dye vessel, a second pressure reduction to approx. 30 mbar overpressure occurs.

Solution

Motorized butterfly valves have proven their merit in this application thanks to their rapid and effective opening area. The pressure control and changeover occurs via two GEMÜ 428 butterfly valves, DN 15, body material 1.4581, sealing material FPM with 24V DC motorized actuator. This powerful actuator is able to turn 90 degrees in less than four seconds in such a way that the butterfly valves can be rapidly actuated despite using a motorized actuator. The motorized actuator has a low-maintenance encapsulated transmission. A sturdy trapezoidal threaded spindle allows the lever to move to the required butterfly position. Two limit switches secure the device against an overload. The GEMÜ 428 butterfly valve has a mechanical emergency manual override and an optical position indicator. As a plastic butterfly valve, the device has the designation GEMÜ 423. Its adapter flange (NAMUR) means that the motorized actuator can also be adapted to other quarter turn valves and can be operated as an independent actuator with the designation GEMÜ 9428. It is available in various versions from 6 to 15 Nm. For larger nominal sizes and torques to 400 Nm, the GEMÜ 9468 motorized actuator is available.

Subject to alteration / 02-2007 / / 88294039

GEMÜ® VALVES, MEASUREMENT AND CONTROL SYSTEMS
Gebr. Müller Apparatebau GmbH & Co. KG · Fritz-Müller-Str. 6-8
D-74653 Ingelfingen · Tel. +49 (0)7940/123-0 · Fax +49 (0) 7940/123-224
info@gemue.de · www.gemu-group.com