GEMÜ 1240

Electrical position indicator

Features

- Position feedback via microswitches, optionally via 2-wire NAMUR proximity switches or 3-wire proximity switches
- Adjustable switch point tolerances using locking levers
- Can be fitted to GEMÜ valves or third-party actuators

Description

The GEMÜ 1240 electrical position indicator is suitable for mounting to pneumatically operated linear actuators. The position of the valve spindle is reliably detected electronically and fed back via microswitches or proximity switches, using play-free and non-positive mounting. The product has been designed specially for valves with a stroke of 5 to 75 mm.

Technical specifications

- **Ambient temperature:** 0 to 60 °C
- **Linear measuring range:** 5 to 75 mm
- **Supply voltages:** 24 V DC I 250 V AC I 8 V NAMUR
- **Protection class:** IP 67
- **Electrical connection type:** M16 cable gland I M12 plug
- **Switch types:** Microswitch I 2-wire proximity switch (NAMUR) I 3-wire proximity switch

Technical data depends on the respective configuration

further information
webcode: GW-1240

Product line

	GEMÜ 1240	**GEMÜ 1241**	**GEMÜ 1242**
Linear measuring range	5 to 75 mm	5 to 75 mm	2 to 75 mm
Radial measuring range	-	0 - 90°	0 - 90°
Ambient temperature	0 to 60 °C	0 to 60 °C	0 to 60 °C
Optical position indicators			
High visibility LED	-	-	●
Mechanical	●	●	-
On-site LED	-	-	●
Electrical connection types			
Cable glands	●	●	-
Connectors	●	●	●
Switch types			
Microswitch	●	-	-
2-wire proximity switch (NAMUR)	●	●	-
3-wire proximity switch	●	-	-
Communication modes			
AS-Interface	-	-	●
DeviceNet	-	-	●
IO-Link	-	-	●
None	●	●	-
Supply voltage			
24 V DC	●	-	●
250 V AC	●	-	-
8 V DC	●	●	-
Conformities			
ATEX	-	●	●
CSA	-	-	●
EAC	-	-	●
ETL Listed C US	-	-	●
IECEx	-	●	●
NEC 500	-	-	●

Product description

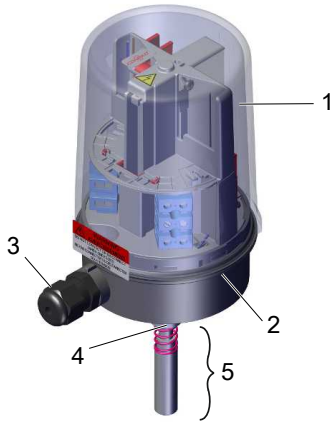

Item	Name	Materials
1	Housing cover	PC
2	Housing base	PPS
3	Electrical connection	SS, PP
4	Adapter piece	SS
5	Mounting kit, valve specific	SS, PP
	Seals	NBR

GEMÜ CONEXO

The interaction of valve components that are equipped with RFID chips and an associated IT infrastructure actively increase process reliability.

Thanks to serialization, every valve and every relevant valve component such as the body, actuator or diaphragm, and even automation components, can be clearly traced and read using the CONEXO pen RFID reader. The CONEXO app, which can be installed on mobile devices, not only facilitates and improves the "installation qualification" process, but also makes the maintenance process much more transparent and easier to document. The app actively guides the maintenance technician through the maintenance schedule and directly provides him with all the information assigned to the valve, such as test reports, testing documentation and maintenance histories. The CONEXO portal acts as a central element, helping to collect, manage and process all data.

For further information on GEMÜ CONEXO please visit:
www.gemu-group.com/conexo

Ordering

GEMÜ Conexo must be ordered separately with the ordering option "CONEXO".

Installing the RFID chip (1)

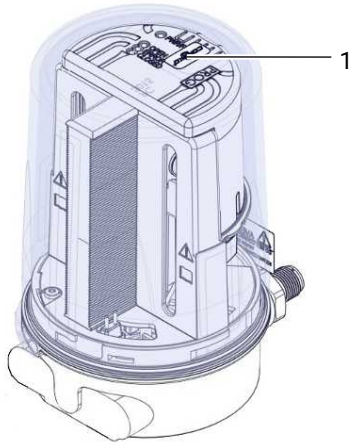

Order data

The order data provide an overview of standard configurations.

Please check the availability before ordering. Other configurations available on request.

Note: A valve specific mounting kit is required for assembly. For designing the mounting kit, the valve type, nominal size, control function and actuator size must be stated.

Order codes

1 Type	Code
Electrical position indicator	1240

2 Fieldbus	Code
Without	000

3 Accessory	Code
Accessory	Z

4 Housing material	Code
PPS base, PC cover	01

5 Device version	Code
Open	A0
Open/closed	AZ
Closed	Z0

6 Electrical connection	Code
M12 plug, 5-pin	01
M16 Skintop cable gland	03

7 Option	Code
Without	00

8 Switch	Code
Change-over contact, microswitch, 24 V DC, 250 V AC Crouzet, V4S, SPDT	M1
Proximity switch, 2-wire, NAMUR P+F, NJ1,5-6,5-15-N-Y180094	N1
Proximity switch, 3-wire, normally open contact, PNP, 10 - 30 V DC Balluff, BES 516-371-SA 16	P1

9 Connection diagram	Code
Microswitch, change-over contact, SPDT	M1
Terminals, NAMUR	N1
3-wire	P1

10 Travel sensor version	Code
Potentiometer, 75 mm length	075

11 CONEXO	Code
Without	
Integrated RFID chip for electronic identification and traceability	C

Order example

Ordering option	Code	Description
1 Type	1240	Electrical position indicator
2 Fieldbus	000	Without
3 Accessory	Z	Accessory
4 Housing material	01	PPS base, PC cover
5 Device version	A0	Open
6 Electrical connection	03	M16 Skintop cable gland
7 Option	00	Without
8 Switch	M1	Change-over contact, microswitch, 24 V DC, 250 V AC Crouzet, V4S, SPDT
9 Connection diagram	M1	Microswitch, change-over contact, SPDT
10 Travel sensor version	075	Potentiometer, 75 mm length
11 CONEXO		Without

Technical data

Temperature

Ambient temperature: 0 — 60 °C

Storage temperature: -10 — 70 °C

Product conformity

EMC Directive: 2014/30/EU

Low Voltage Directive: 2014/35/EU

Mechanical data

Installation position: Optional

Weight: 420 g

Protection class: IP 67

Travel sensor: 5 — 75 mm

Electrical data

Electrical connection type:

M12 cable gland

Connection thread: M16 x 1.5, WAF 19
Cable diameter: 4.5 to 10 mm
Recommended wire cross section: 0.75 mm² x 8 cables

Switch type:

Code M1	Code N1	Code P1
Microswitch, change-over contact, SPDT	2-wire NAMUR	3-wire, normally open contact, PNP

Supply voltage:

Switch		
Code M1	Code N1	Code P1
24 V DC, 250 V AC	8 V DC	10 to 30 V DC

Rated current/ current consumption:

Switch		
Code M1	Code N1	Code P1
for DC: 5 mA to 5 A for AC: 100 mA to 6 A	≥ 3 mA (undamped) ≤ 1 mA (damped)	0–200 mA

Dimensions

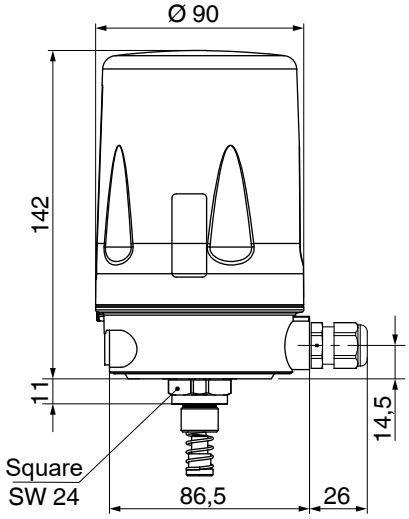

Dimensions in mm

Electrical connection

Microswitch, ordering option Connection diagram code M1

Connection diagram

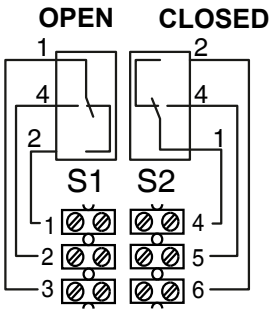

Electrical connection Code 03

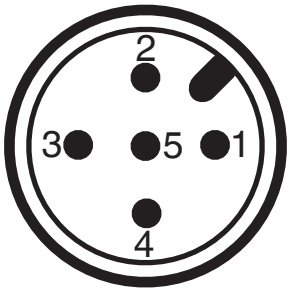

Electrical connection Code 01

Connection	Terminal	Signal	M12 plug
S1 switch OPEN	1	Normally closed	-
	2	Normally open	Pin 1
	3	Common	Pin 2
S2 switch CLOSED	4	Common	Pin 3
	5	Normally open	Pin 4
	6	Normally closed	-

2-wire NAMUR proximity switch, ordering option Connection diagram code N1

Connection diagram

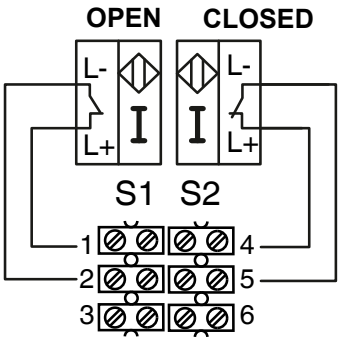

Electrical connection Code 03

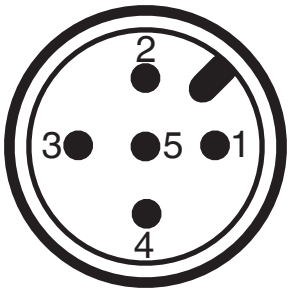

Electrical connection Code 01

Connection	Terminal	Signal	M12 plug
S1 switch OPEN	1	L + 8 V DC	Pin 1
	2	L -	Pin 2
	3	NC	NC
S2 switch CLOSED	4	L + 8 V DC	Pin 3
	5	L -	Pin 4
	6	NC	NC
NC = not connected			

3-wire proximity switch, ordering option Connection diagram code P1

Connection diagram

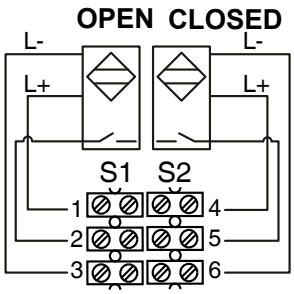

Electrical connection Code 03

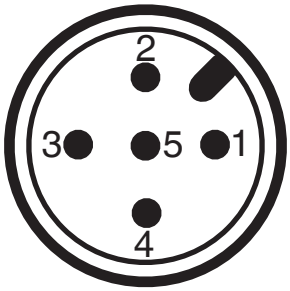

Electrical connection Code 01

Connection	Terminal	Signal	M12 plug
S1 switch OPEN	1	L + 10 to 30 V DC operating voltage	Pin 1
	2	Load	Pin 4
	3	L - GND	Pin 3
S2 switch CLOSED	4	L + 10 to 30 V DC operating voltage	Pin 1
	5	Load	Pin 2
	6	L - GND	Pin 3

GEMÜ Gebr. Müller Apparatebau GmbH & Co. KG
Fritz-Müller-Straße 6-8, 74653 Ingelfingen-Criesbach, Germany
Phone +49 (0) 7940 1230 · info@gemue.de
www.gemu-group.com

Subject to alteration | 12.2023 | 88772322