GEMÜ 567 BioStar control

Pneumatically operated control valve

Features

- Hermetic separation between medium and actuator due to PD sealing technology
- Easy, fast, and error-optimized maintenance
- Actuator can be replaced under operating pressure without contaminating the medium
- FDA compliant as standard and suitable for contact with food according to Regulation (EC) No. 1935/2004
- Highly suitable for precise control applications
- Actuator size 2 and 3 suitable as standard for vacuum up to 10 mbar (a)
  actuator size 4 and 5 suitable as standard for vacuum up to 200 mbar (a)

Description

The GEMÜ 567 BioStar Control 2/2-way diaphragm globe valve is designed for use in sterile applications. Flow rates range from 80 l/h to 63,000 l/h, depending on the version. The sealing concept of the valve is based on the GEMÜ PD design. All actuator parts (except the seals) are made from stainless steel. Normally Closed, Normally Open and Double Acting control functions are available.

Technical specifications

- **Media temperature:** -10 to 160 °C
- **Ambient temperature:** -10 to 60 °C
- **Operating pressure :** 0 to 10 bar
- **Nominal sizes:** DN 8 to 65
- **Body configurations:** Angle valve body I Multi-port body
- **Connection types:** Clamp I Spigot
- **Connection standards:** ASME I DIN I EN I ISO
- **Body materials:** 1.4410, block material I 1.4435 (316L), block material I 1.4435 (BN2), block material I 1.4529, block material I 1.4539 (904L), block material I 2.4602, block material
- **Seal materials:** PTFE I Stainless steel/FKM/PTFE
- **Conformities:** 3A I ATEX I EAC I FDA I Oxygen I Reg. (EU) No. 10/2011 I Regulation (EC) No. 1935/2004 I Regulation (EC) No. 2023/2006 I USP

Technical data depends on the respective configuration

further information
webcode: GW-567

Contents

1 Product comparison ... 3

2 Product description ... 4

2.1 Construction ... 4

2.2 Flow direction ... 4

2.5 GEMÜ CONEXO ... 6

3 Availability ... 7

3.1 Availability of valve bodies ... 7

3.1.1 Spigot without bypass ... 7

3.1.2 Spigot with bypass ... 7

3.1.3 Clamp without bypass ... 8

3.1.4 Clamp with bypass ... 8

3.2 Availability of grades of surface finish ... 9

4 Order data ... 10

5 Technical data ... 13

5.1 Medium ... 13

5.2 Temperature ... 13

5.3 Pressure ... 13

5.4 Product compliance ... 17

5.5 Mechanical data ... 17

6 Dimensions ... 18

6.1 Actuator dimensions ... 18

6.2 Body dimensions ... 19

Product comparison

	GEMÜ 567 eSyDrive	**GEMÜ 567 servoDrive**	**GEMÜ 567 BioStar control**	**GEMÜ 567 BioStar control**
Operation				
Manual	-	-	●	-
Pneumatic	-	-	-	●
Motorized	●	●	-	-
Nominal sizes	DN 8 to 65	DN 8 to 20	DN 8 to 25	DN 8 to 65
Operating pressure	0 to 10 bar	0 to 7 bar	0 to 10 bar	0 to 10 bar
Body material				
1.4410, block material	●	●	●	●
1.4435 (316L), block material	●	●	●	●
1.4435 (BN2), block material	●	●	●	●
1.4529, block material	●	●	●	●
1.4539 (904L), block material	●	●	●	●
2.4602, block material	●	●	●	●
Connection types				
Clamp	●	●	●	●
Spigot	●	●	●	●

Product description

Construction

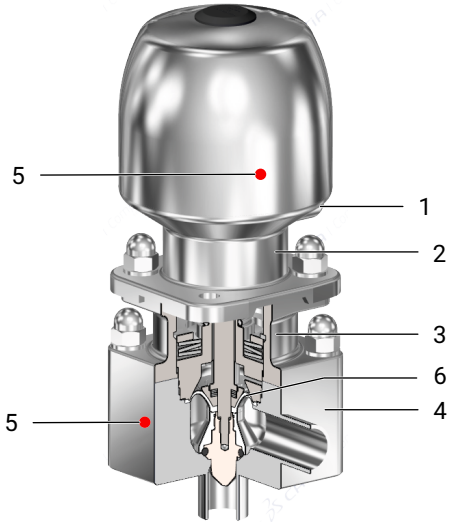

Item	Name	Materials
1	Pneumatic actuator connection	
2	Actuator housing	1.4305
3	Distance piece	1.4404
4	Valve body with leak detection hole	1.4435, 1.4539, 2.4602, 1.4410, 1.4529
5	CONEXO RFID chip	
6	Plug diaphragm	PTFE

Flow direction

Installation position for optimized draining

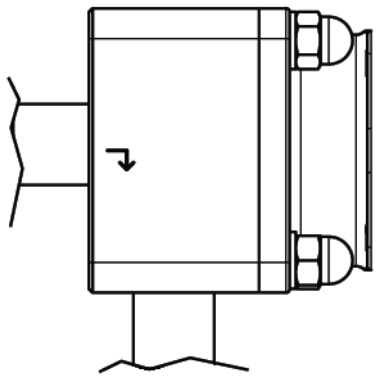

in closed and open position

Actuator horizontal

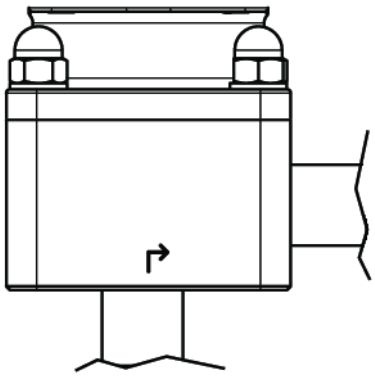

in open position

Actuator horizontal or vertical

Control range

We recommend designing the valves in such a way that the control range is within an opening stroke of 20% to 90% of the control valve.

PD seal system without bypass

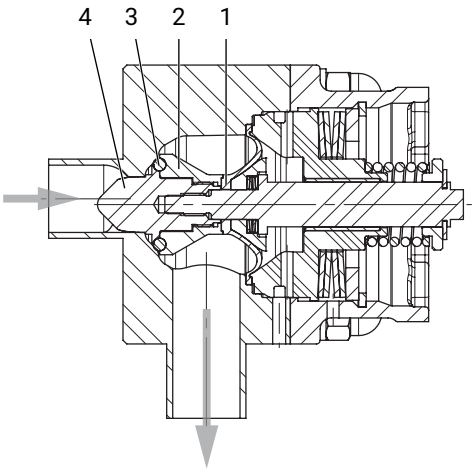

Seal material code 4

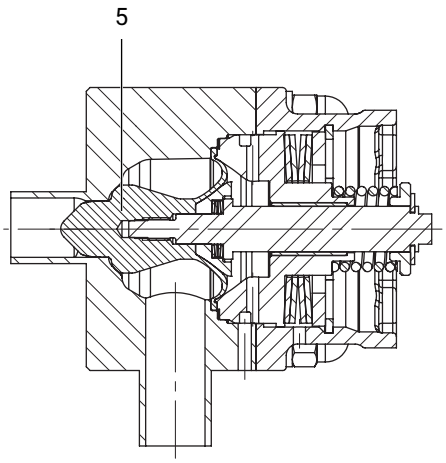

Seal material code 5

Item	Name	Materials
1	Plug diaphragm	PTFE
2	Support ring	1.4435, 1.4539, 2.4602, 1.4410, 1.4529
3	O-ring	FKM
4	Regulating cone	1.4435, 1.4539, 2.4602, 1.4410, 1.4529
5	Plug diaphragm with regulating cone	PTFE

PD seal system with bypass

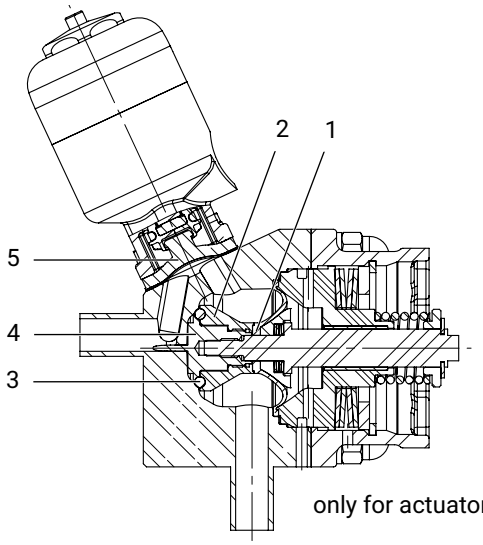

only for actuator size 2

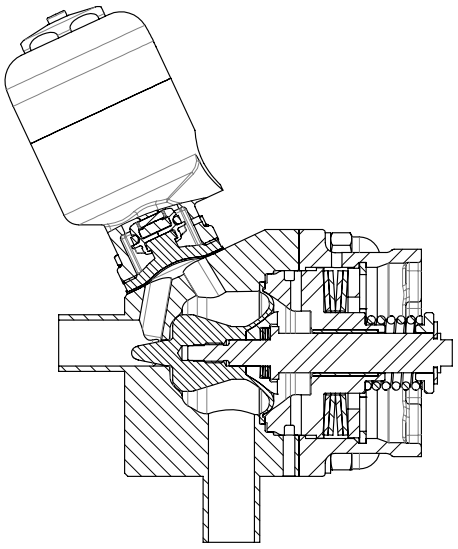

Item	Name	Materials
1	Plug diaphragm FKM, PTFE	PTFE
2	Support ring	1.4435, 1.4539, 2.4602, 1.4410, 1.4529
3	O-ring	FKM, FFKM
4	Regulating cone	1.4435, 1.4539, 2.4602, 1.4410, 1.4529
5	Bypass valve diaphragm	PTFE-EPDM, EPDM

GEMÜ CONEXO

The interaction of valve components that are equipped with RFID chips and an associated IT infrastructure actively increase process reliability.

Thanks to serialization, every valve and every relevant valve component such as the body, actuator or diaphragm, and even automation components, can be clearly traced and read using the CONEXO pen RFID reader. The CONEXO app, which can be installed on mobile devices, not only facilitates and improves the "installation qualification" process, but also makes the maintenance process much more transparent and easier to document. The app actively guides the maintenance technician through the maintenance schedule and directly provides him with all the information assigned to the valve, such as test reports, testing documentation and maintenance histories. The CONEXO portal acts as a central element, helping to collect, manage and process all data.

For further information on GEMÜ CONEXO please visit:
www.gemu-group.com/conexo

Ordering

GEMÜ Conexo must be ordered separately with the ordering option "CONEXO".

Availability

Availability of valve bodies

Spigot without bypass

AG	DN	Connection type code [1]			
		0	17	59	60
2	8	-	X	-	X
	10	-	X	-	X
	15	X	X	X	X
	20	-	-	X	-
3	20	X	X	-	X
	25	X	X	X	X
4	32	-	X	-	X
	40	-	X	X	X
	50	-	-	X	-
5	50	-	X	-	X
	65	-	-	X	-

AG = actuator size

1) **Connection type**
Code 0: Spigot DIN
Code 17: Spigot EN 10357 series A (formerly DIN 11850 series 2)/DIN 11866 series A
Code 59: Spigot ASME BPE / DIN 11866 series C
Code 60: Spigot ISO 1127/EN 10357 series C/DIN 11866 series B

Spigot with bypass

AG	DN	Connection type code [1]			
		0	17	59	60
2	8	-	X	-	X
	10	-	X	-	X
	15	X	X	X	X
	20	-	-	X	-

AG = actuator size

1) **Connection type**
Code 0: Spigot DIN
Code 17: Spigot EN 10357 series A (formerly DIN 11850 series 2)/DIN 11866 series A
Code 59: Spigot ASME BPE / DIN 11866 series C
Code 60: Spigot ISO 1127/EN 10357 series C/DIN 11866 series B

Clamp without bypass

AG	DN	Connection type code [1]		
		82	86	88
2	8	X	X	-
	10	X	X	-
	15	X	X	X
	20	-	-	X
3	20	X	X	-
	25	X	X	X
4	32	X	X	-
	40	X	X	X
	50	-	-	X
5	50	X	X	-
	65	-	-	X

AG = actuator size

1) **Connection type**
Code 82: Clamp DIN 32676 series B
Code 86: Clamp DIN 32676 series A
Code 88: Clamp ASME BPE

Clamp with bypass

AG	DN	Connection type code [1]		
		82	86	88
2	8	X	X	-
	10	X	X	-
	15	X	X	X
	20	-	-	X

AG = actuator size

1) **Connection type**
Code 82: Clamp DIN 32676 series B
Code 86: Clamp DIN 32676 series A
Code 88: Clamp ASME BPE

Availability of grades of surface finish

Internal surface finishes for block material bodies [1)]

Readings for Process Contact Surfaces	Mechanically polished [2)]		Electropolished	
	Hygienic class DIN 11866	Code	Hygienic class DIN 11866	Code
Ra ≤ 0.40 µm	H4	1536	HE4	1537
Ra ≤ 0.25 µm [3)]	H5	1527	HE5	1516

Readings for Process Contact Surfaces according to ASME BPE 2016 [4)]	Mechanically polished [2)]		Electropolished	
	ASME BPE Surface Designation	Code	ASME BPE Surface Designation	Code
Ra Max. = 0.51 µm (20 µinch)	SF1	SF1	SF5	SF5
Ra Max. = 0.38 µm (15 µinch)	-	-	SF4	SF4

Ra acc. to DIN EN ISO 4288 and ASME B46.1

1) Surface finishes of customized valve bodies may be limited in special cases.

2) Or any other finishing method that meets the Ra value (acc. to ASME BPE).

3) The maximum Ra finish achievable for pipe connections with an internal pipe diameter < 6 mm is 0.38 µm.

4) When using these surfaces, the bodies are marked according to the specifications of ASME BPE.
The surfaces are only available for valve bodies which are made of materials (e.g. GEMÜ material code 41) and use connections (e.g. GEMÜ connection codes 59, 80, 88) according to ASME BPE.

Order data

The order data provide an overview of standard configurations.

Please check the availability before ordering. Other configurations available on request.

Order codes

1 Type	Code
Control valve	567

2 DN	Code
DN 8	8
DN 10	10
DN 15	15
DN 20	20
DN 25	25
DN 32	32
DN 40	40
DN 50	50
DN 65	65

3 Body configuration	Code
2-way angle body	E
2-way angle body with bypass	M

4 Connection type	Code
Spigot	
Spigot DIN	0
Spigot EN 10357 series A (formerly DIN 11850 series 2)/DIN 11866 series A	17
Spigot ASME BPE / DIN 11866 series C	59
Spigot ISO 1127/EN 10357 series C/DIN 11866 series B	60
Clamp	
Clamp DIN 32676 series B	82
Clamp DIN 32676 series A	86
Clamp ASME BPE	88

5 Valve body material	Code
1.4435 (316L), block material	41
1.4435 (BN2), block material, Δ Fe < 0.5%	43
1.4539, block material	44
2.4602, block material Alloy 22, (NiCr21Mo14W)	A3
1.4410, block material	A7
1.4529, block material	A8

6 Seal material	Code
Actuator seal PTFE / seat seal FKM	4
Actuator seal PTFE / seat seal PTFE	5
Actuator seal PTFE / seat seal FKM / bypass seal EPDM bypass diaphragm code 13	43
Actuator seal PTFE / seat seal FKM / bypass seal PTFE bypass diaphragm code 54	45
Actuator seal PTFE / seat seal FKM / bypass seal EPDM bypass diaphragm code 17	47
Actuator seal PTFE / seat seal PTFE / bypass seal PTFE bypass diaphragm code 54	55

6 Seal material	Code
Actuator seal PTFE / seat seal FFKM	F
Actuator seal PTFE / seat seal FFKM / bypass seal PTFE bypass diaphragm code 54	F5

7 Control function	Code
Normally closed (NC)	1
Normally open (NO)	2
Double acting (DA)	3

8 Actuator version	Code
Actuator size 2, pneumatically operated	2T1
Actuator size 3, pneumatically operated	3T1
Actuator size 4, pneumatically operated	4T1
Actuator size 5T1	5T1

9 Control characteristic	Code
Modified equal-percentage	G
Linear	L

10 Kv value	Code
80 l/h	AA
100 l/h	AB
160 l/h	BC
250 l/h	BD
400 l/h	BE
630 l/h	CF
1.0 m³/h	CG
1.6 m³/h	DH
2.6 m³/h	EJ
4.1 m³/h	G1
8.0 m³/h	H2
12.5 m³/h	J3
14.0 m³/h	K4
18.0 m³/h	K5
25.0 m³/h	K6
32.0 m³/h	M7
40.0 m³/h	M8
50.0 m³/h	N9
63.0 m³/h	NK

11 Bypass actuator version	Code
Pneumatically operated, normally closed, diaphragm size 8,	11
Pneumatically operated, normally open, diaphragm size 8,	12

11 Bypass actuator version	Code
Manually operated, with seal adjuster, diaphragm size 8,	S0

12 Special specification	Code
Ra ≤ 0.25 µm (10 µin.) for media wetted surfaces *), in accordance with DIN 11866 HE5, electropolished internal/external, *) for inner pipe diameters < 6 mm, in the spigot Ra ≤ 0.38 µm	1516
Ra ≤ 0.25 µm (10 µin.) for media wetted surfaces *), in accordance with DIN 11866 H5, mechanically polished internal, *) for inner pipe diameters < 6 mm, in the spigot Ra ≤ 0.38 µm	1527
Ra ≤ 0.4 µm (15 µin.) for media wetted surfaces, in accordance with DIN 11866 H4, mechanically polished internal	1536
Ra ≤ 0.4 µm (15 µin.) for media wetted surfaces, in accordance with DIN 11866 HE4, electropolished internal/external	1537
Ra max. 0.51 µm (20 µin.) for media wetted surfaces, in accordance with ASME BPE SF1, mechanically polished internal	SF1
Ra max. 0.38 µm (15 µin.) for media wetted surfaces, in accordance with ASME BPE SF4, electropolished internal/external	SF4
Ra max. 0.51 µm (20 µin.) for media wetted surfaces, in accordance with ASME BPE SF5, electropolished internal/external	SF5

13 Special version	Code
Special version for 3A	M
Special version for oxygen, maximum medium temperature: 60 °C, media wetted seal materials and auxiliary materials with BAM testing	S

14 CONEXO	Code
Without	
Integrated RFID chip for electronic identification and traceability	C

Order example without bypass

Ordering option	Code	Description
1 Type	567	Control valve
2 DN	15	DN 15
3 Body configuration	E	2-way angle body
4 Connection type	17	Spigot EN 10357 series A (formerly DIN 11850 series 2)/DIN 11866 series A
5 Valve body material	41	1.4435 (316L), block material
6 Seal material	5	Actuator seal PTFE / seat seal PTFE
7 Control function	1	Normally closed (NC)
8 Actuator version	2T1	Actuator size 2, pneumatically operated
9 Control characteristic	G	Modified equal-percentage
10 Kv value	G1	4.1 m³/h
11 Special specification	1536	Ra ≤ 0.4 µm (15 µin.) for media wetted surfaces, in accordance with DIN 11866 H4, mechanically polished internal
12 Special version	M	Special version for 3A
13 CONEXO	C	Integrated RFID chip for electronic identification and traceability

Order example with bypass

Ordering option	Code	Description
1 Type	567	Control valve
2 DN	15	DN 15
3 Body configuration	M	2-way angle body with bypass
4 Connection type	17	Spigot EN 10357 series A (formerly DIN 11850 series 2)/DIN 11866 series A
5 Valve body material	41	1.4435 (316L), block material
6 Seal material	55	Actuator seal PTFE / seat seal PTFE / bypass seal PTFE bypass diaphragm code 54
7 Control function	1	Normally closed (NC)
8 Actuator version	2T1	Actuator size 2, pneumatically operated
9 Control characteristic	G	Modified equal-percentage
10 Kv value	G1	4.1 m³/h
11 Bypass actuator version	S0	Manually operated, with seal adjuster, diaphragm size 8,
12 Special specification	1536	Ra ≤ 0.4 µm (15 µin.) for media wetted surfaces, in accordance with DIN 11866 H4, mechanically polished internal
13 Special version	M	Special version for 3A
14 CONEXO	C	Integrated RFID chip for electronic identification and traceability

Technical data

Medium

Working medium: Corrosive, inert, gaseous and liquid media which have no negative impact on the physical and chemical properties of the body and diaphragm material.

Temperature

Media temperature:

Without bypass	-10 — 160 °C
With bypass	-10 — 100 °C

Observe pressure/temperature diagram

Sterilization temperature:

Seat seal FKM, FFKM without bypass, (code 4, F)	160 °C [1], steam max. 30 min [2]
Seat seal PTFE without bypass, (code 5)	160 °C [1], steam max. 30 min [2]
Seat seal FKM, FFKM bypass diaphragm material EPDM, (code 43, F3)	150 °C [3], max. 30 min
Seat seal FKM, FFKM bypass diaphragm material PTFE/EPDM, PTFE laminated, (code 45, F5)	150 °C [3], max. 30 min
Seat seal FKM, FFKM bypass diaphragm material EPDM, (code 47, F7)	150 °C [3], max. 30 min
Seat seal PTFE bypass diaphragm material PTFE/EPDM, PTFE laminated, (code 55)	150 °C [3], max. 30 min

1) The sterilization temperature is only valid for steam (saturated steam) or superheated water.

2) Longer sterilization times or continuous operation on request.

3) If the sterilization temperatures listed above are applied to the EPDM diaphragms for longer periods of time, the service life of the diaphragms will be reduced. In these cases, maintenance cycles must be adapted accordingly. This also applies to PTFE diaphragms exposed to high temperature fluctuations. The maintenance cycles must be adapted accordingly.

Ambient temperature: -10 — 60 °C

Storage temperature: 0 — 40 °C

Pressure

Operating pressure: 0 — 10 bar

All pressures are gauge pressures. Operating pressure values were determined with static operating pressure applied on one side of a closed valve. Sealing at the valve seat and atmospheric sealing is ensured for the given values.

Information on operating pressures applied on both sides and for high purity media on request.

Operating pressure:

Pressure/Temperature diagram

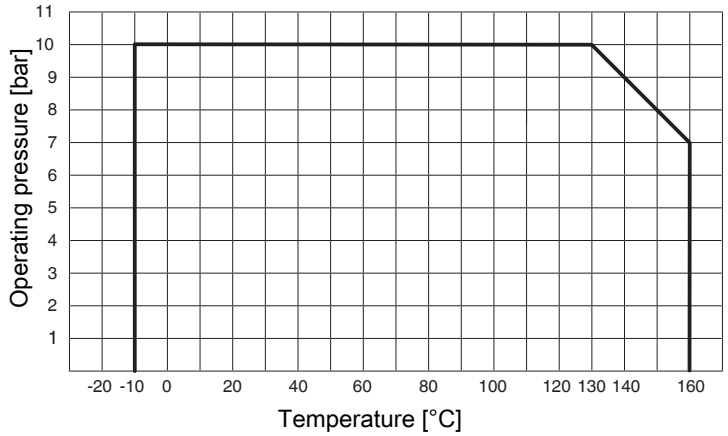

Control pressure:

DN	Actuator size		Control function	Control pressure
8, 10, 15, 20	**2**	Control pressure with main valve actuator	**1**	5.0 to 7 bar
			2 + 3	max. 4.5 bar
		Control pressure with by-pass actuator	**1**	3.5 to 7 bar
			2 + 3	max. 4.5 bar
20, 25	**3**	Without bypass	**1**	4.5 to 7 bar
			2 +3	max. 5.5 bar
32, 40, 50	**4**	Without bypass	**1**	4.5 to 7 bar
			2 +3	max. 5.5 bar
50, 65	**5**	Without bypass	**1**	4.5 to 7 bar
			2 +3	max. 5.5 bar

Control pressure diagram c.f. 2 + 3

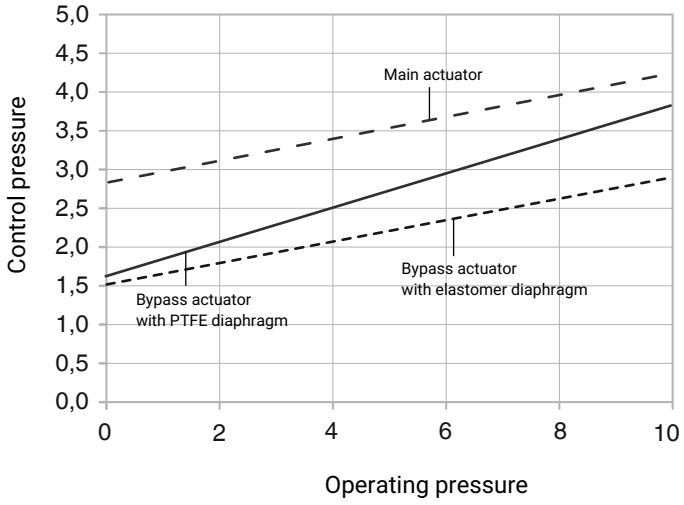

Leakage rate:

Control valve

Seat seal	Standard	Test procedure	Leakage rate	Test medium
FKM, PTFE	DIN EN 60534-4	1	VI	Air

Kv values:

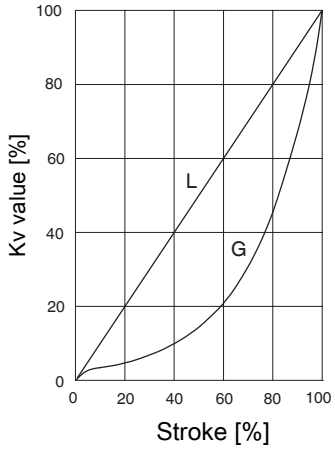

Code 17, 60, 82 and 86

AG	Seal material code	Control characteristic	Kv value	DN 8	DN 10	DN 15	DN 20	DN 25	DN 32	DN 40	DN 50
2	4, 43, 45, 47, F, F5	GAA, LAA	80 l/h	X	X	X	-	-	-	-	-
		GAB, LAB	100 l/h	X	X	X	-	-	-	-	-
		GBC, LBC	160 l/h	X	X	X	-	-	-	-	-
		GBD, LBD	250 l/h	X	X	X	-	-	-	-	-
		GBE, LBE	400 l/h	X	X	X	-	-	-	-	-
	5, 55	GCF, LCF	630 l/h	X	X	X	-	-	-	-	-
		GCG, LCG	1.0 m³/h	-	X	X	-	-	-	-	-
		GDH, LDH	1.6 m³/h	-	X	X	-	-	-	-	-
		GEJ, LEJ	2.6 m³/h	-	-	X	-	-	-	-	-
		GG1, LG1	4.1 m³/h	-	-	X	-	-	-	-	-
3	5	GH2, LH2	8.0 m³/h	-	-	-	X	X	-	-	-
		GJ3, LJ3	12.5 m³/h	-	-	-	-	X	-	-	-
4	5	GK4, LK4	14.0 m³/h	-	-	-	-	-	X	X	-
		GK5, LK5	18.0 m³/h	-	-	-	-	-	X	X	-
		GK6, LK6	25.0 m³/h	-	-	-	-	-	X	X	-
		GM7, LM7	32.0 m³/h	-	-	-	-	-	-	X	-
		GM8, LM8	40.0 m³/h	-	-	-	-	-	-	X	-
5	5	GN9, LN9	50.0 m³/h	-	-	-	-	-	-	-	X
		GNK, LNK	63.0 m³/h	-	-	-	-	-	-	-	X

Kv values:

Code 59 and 88

AG	Seal material code	Control characteristic	Kv value	DN 15	DN 20	DN 25	DN 40	DN 50	DN 65
2	4, 43, 45, 47, F, F5	GAA, LAA	80 l/h	X	X	-	-	-	-
		GAB, LAB	100 l/h	X	X	-	-	-	-
		GBC, LBC	160 l/h	X	X	-	-	-	-
		GBD, LBD	250 l/h	X	X	-	-	-	-
		GBE, LBE	400 l/h	X	X	-	-	-	-
	5, 55	GCF, LCF	630 l/h	X	X	-	-	-	-
		GCG, LCG	1.0 m³/h	X	X	-	-	-	-
		GDH, LDH	1.6 m³/h	X	X	-	-	-	-
		GEJ, LEJ	2.6 m³/h	-	X	-	-	-	-
		GG1, LG1	4.1 m³/h	-	X	-	-	-	-
3	5	GH2, LH2	8.0 m³/h	-	-	X	-	-	-
4	5	GK4, LK4	14.0 m³/h	-	-	-	X	X	-
		GK5, LK5	18.0 m³/h	-	-	-	X	X	-
		GK6, LK6	25.0 m³/h	-	-	-	X	X	-
		GM7, LM7	32.0 m³/h	-	-	-	-	X	-
		GM8, LM8	40.0 m³/h	-	-	-	-	X	-
5	5	GN9, LN9	50.0 m³/h	-	-	-	-	-	X
		GNK, LNK	63.0 m³/h	-	-	-	-	-	X

Kv values - Bypass (only available in AG2)				
Code	DN8	DN10	DN15	DN20
0, 17, 86	1.5 m^3/h	1.8 m^3/h	2.1 m^3/h	-
60, 82	1.8 m^3/h	2.1 m^3/h	2.1 m^3/h	-
59, 88	-	-	1.8 m^3/h	2.1 m^3/h

AG = actuator size
Kv values determined acc.to DIN EN 60534.

Product compliance

Machinery Directive: 2006/42/EC

EMC Directive: 2014/30/EU

Food:
FDA
USP Class VI
Regulation (EC) No. 1935/2004
Regulation (EC) No. 10/2011

Mechanical data

Weight:

Actuator

Actuator size 2	2.7 kg
Actuator size 3	5.1 kg
Actuator size 4	10.3 kg
Actuator size 5	20.4 kg

Valve body

Actuator size 2	1.6 kg
Actuator size 3	2.8 kg
Actuator size 4	4.3 kg
Actuator size 5	7.6 kg

Dimensions

Actuator dimensions

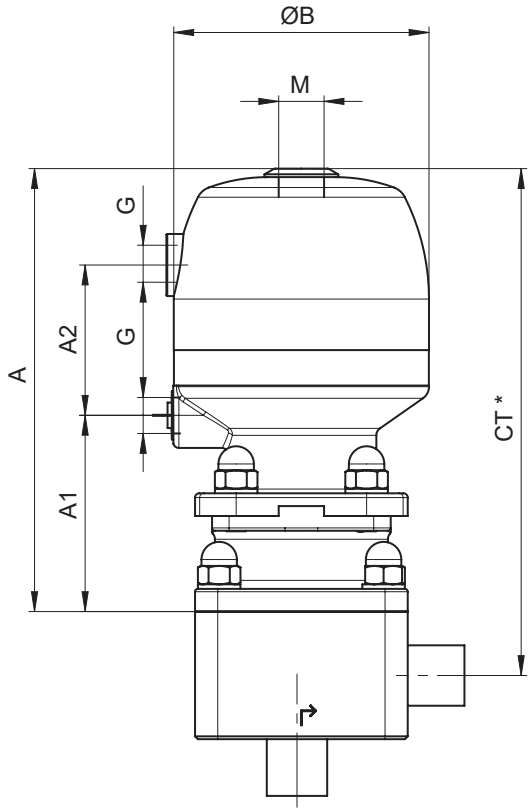

DN	Actuator size	A	A1	A2	G	ØB	M
8, 10, 15, 20	2	170.0	69.2	53.0	G1/4	90.0	M16x1
20, 25	3	199.0	97.0	56.5	G1/4	114.0	M16x1
32, 40, 50	4	250.4	100.0	70.5	G1/4	144.0	M16x1
50, 65	5	317.8	147.5	-	G1/4	240.0	M26x1.5

Dimensions in mm
* CT = A + H1 (see body dimensions)

Body dimensions

Spigot without bypass code 0

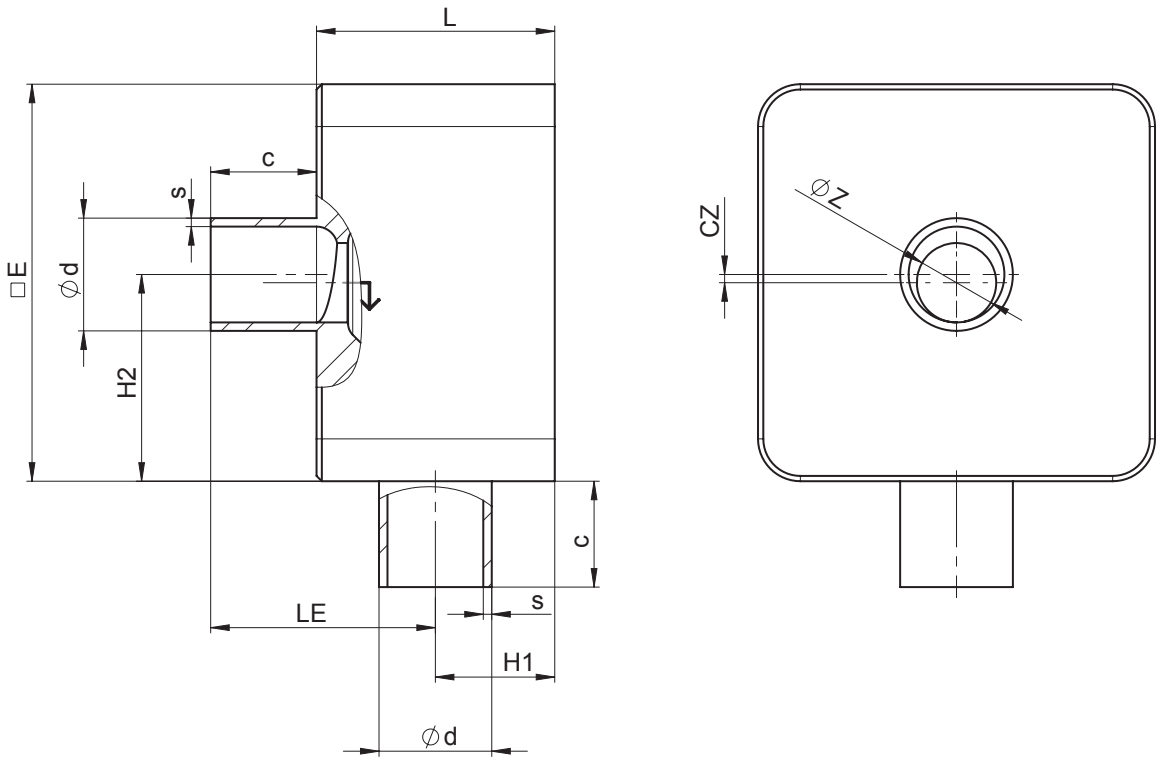

AG	DN	Connection type code 0 [1]										
		Seat size (code)	L	□E	c	Øz	LE	H1	H2	cz	Ød	s
2	15	A	45.0	75.0	20.0	2.0	44.0	21.0	40.5	6.5	18.0	1.5
		B	45.0	75.0	20.0	4.0	44.0	21.0	39.5	5.5	18.0	1.5
		C	45.0	75.0	20.0	6.0	44.0	21.0	38.5	4.5	18.0	1.5
		D	45.0	75.0	20.0	8.0	44.0	21.0	41.0	3.5	18.0	1.5
		E	45.0	75.0	20.0	10.0	44.0	21.0	40.0	2.5	18.0	1.5
		G	45.0	75.0	20.0	15.0	44.0	21.0	37.5	0.0	18.0	1.5
3	20	H	55.0	95.0	25.0	20.0	54.0	26.0	50.0	0.0	22.0	1.5
	25	H	55.0	95.0	25.0	20.0	54.0	26.0	50.0	2.5	28.0	1.5
		J	55.0	95.0	25.0	25.0	54.0	26.0	47.5	0.0	28.0	1.5

Dimensions in mm
AG = actuator size

1) **Connection type**
Code 0: Spigot DIN

Spigot without bypass code 17

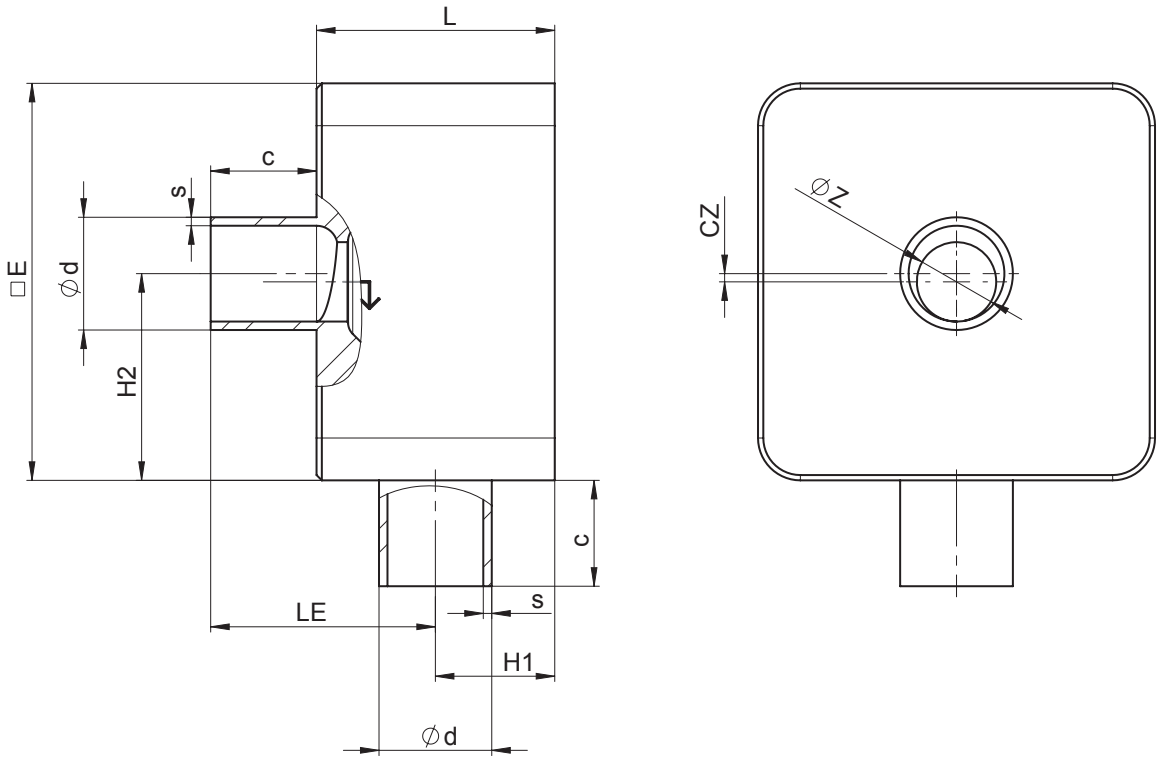

AG	DN	Connection type code 17 [1]										
		Seat size (code)	L	□E	c	Øz	LE	H1	H2	cz	Ød	s
2	8	A	45.0	75.0	20.0	2.0	47.5	17.5	40.5	3.0	10.0	1.0
		B	45.0	75.0	20.0	4.0	47.5	17.5	39.5	2.0	10.0	1.0
		C	45.0	75.0	20.0	6.0	47.5	17.5	38.5	1.0	10.0	1.0
	10	A	45.0	75.0	20.0	2.0	46.5	18.5	41.5	4.0	13.0	1.5
		B	45.0	75.0	20.0	4.0	46.5	18.5	40.5	3.0	13.0	1.5
		C	45.0	75.0	20.0	6.0	46.5	18.5	39.5	2.0	13.0	1.5
		D	45.0	75.0	20.0	8.0	46.5	18.5	38.5	1.0	13.0	1.5
	15	A	45.0	75.0	20.0	2.0	43.5	21.5	44.5	7.0	19.0	1.5
		B	45.0	75.0	20.0	4.0	43.5	21.5	43.5	6.0	19.0	1.5
		C	45.0	75.0	20.0	6.0	43.5	21.5	42.5	5.0	19.0	1.5
		D	45.0	75.0	20.0	8.0	43.5	21.5	41.5	4.0	19.0	1.5
		E	45.0	75.0	20.0	10.0	43.5	21.5	40.5	3.0	19.0	1.5
		G	45.0	75.0	20.0	15.0	43.5	21.5	38.0	0.5	19.0	1.5
3	20	H	55.0	95.0	25.0	20.0	56.5	23.5	47.5	0.0	23.0	1.5
	25	H	55.0	95.0	25.0	20.0	53.5	26.5	50.5	3.0	29.0	1.5
		J	55.0	95.0	25.0	25.0	53.5	26.5	48.0	0.5	29.0	1.5

Dimensions in mm
AG = actuator size

1) **Connection type**
Code 17: Spigot EN 10357 series A (formerly DIN 11850 series 2)/DIN 11866 series A

Spigot without bypass code 17

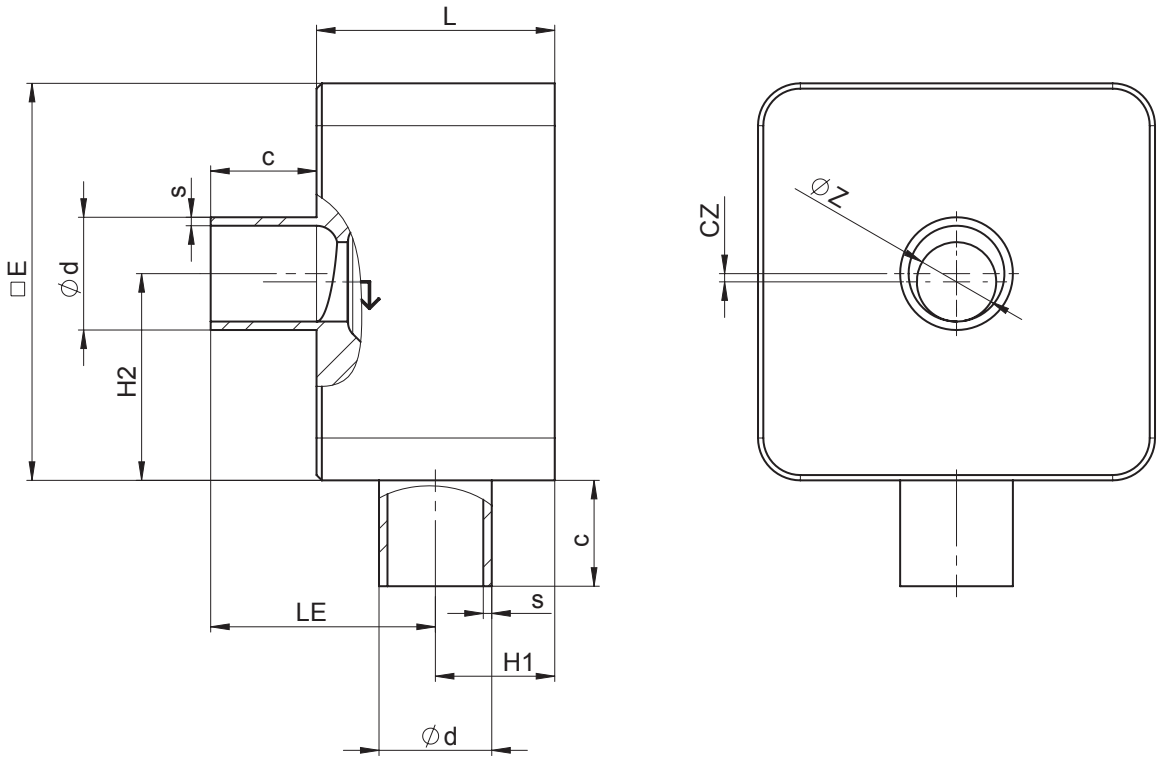

AG	DN	Connection type code 17 [1]										
		Seat size (code)	L	□E	c	Øz	LE	H1	H2	cz	Ød	s
4	32	K	73.0	112.0	20.0	32.0	62.0	31.0	54.5	1.5	38.0	1.5
	40	K	73.0	112.0	20.0	32.0	60.4	32.6	53.0	3.0	41.0	1.5
		M	73.0	112.0	20.0	38.0	60.4	32.6	56.0	0.0	41.0	1.5
5	50	N	84.0	140.0	20.0	50.0	65.4	38.6	90.0	0.0	53.0	1.5

Dimensions in mm
AG = actuator size

1) **Connection type**
Code 17: Spigot EN 10357 series A (formerly DIN 11850 series 2)/DIN 11866 series A

Spigot without bypass code 59

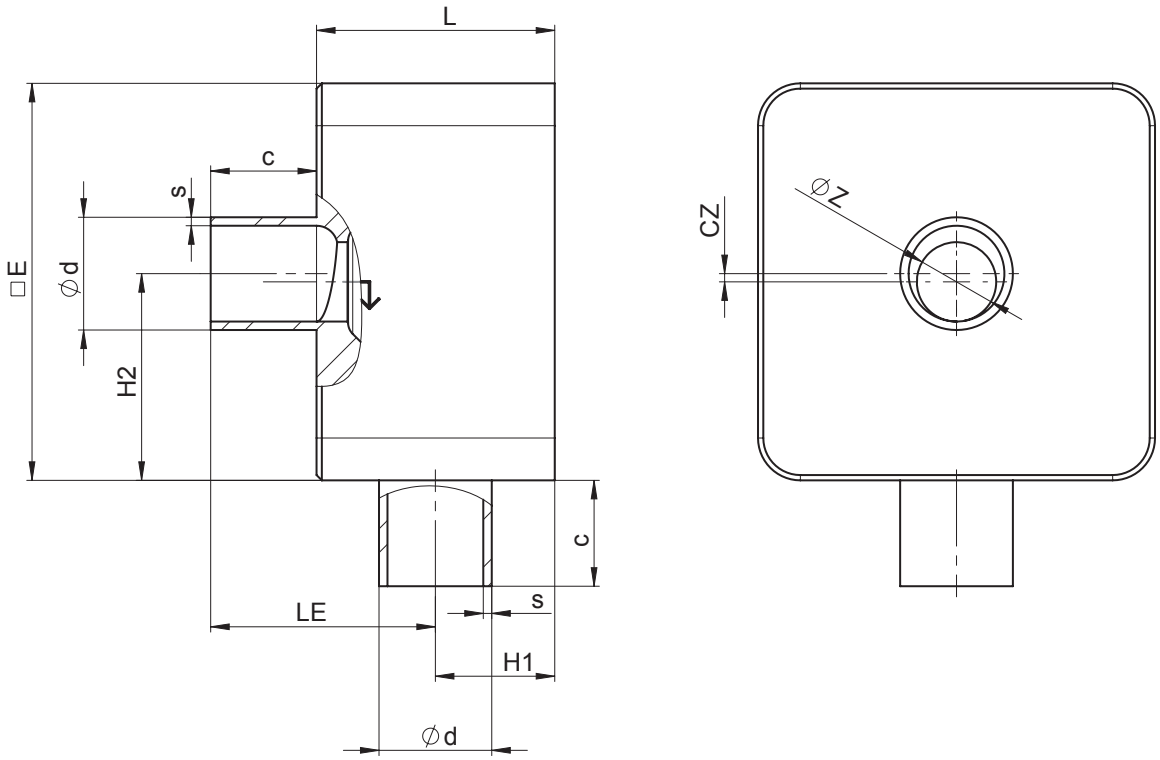

AG	DN	Connection type code 59 [1]										
		Seat size (code)	L	□E	c	Øz	LE	H1	H2	cz	Ød	s
2	15	A	45.0	75.0	20.0	2.0	46.8	18.2	41.20	3.70	12.70	1.65
		B	45.0	75.0	20.0	4.0	46.8	18.2	40.20	2.70	12.70	1.65
		C	45.0	75.0	20.0	6.0	46.8	18.2	39.20	1.70	12.70	1.65
		D	45.0	75.0	20.0	8.0	46.8	18.2	38.20	0.70	12.70	1.65
	20	A	45.0	75.0	20.0	2.0	48.6	21.4	44.38	6.88	19.05	1.65
		B	45.0	75.0	20.0	4.0	43.6	21.4	43.38	5.88	19.05	1.65
		C	45.0	75.0	20.0	6.0	43.6	21.4	42.38	4.88	19.05	1.65
		D	45.0	75.0	20.0	8.0	43.6	21.4	41.38	3.88	19.05	1.65
		E	45.0	75.0	20.0	10.0	43.6	21.4	40.38	2.88	19.05	1.65
		G	45.0	75.0	20.0	15.0	43.6	21.4	37.88	0.38	19.05	1.65
3	25	H	55.0	95.0	25.0	20.0	55.4	24.6	48.60	1.10	25.40	1.65

Dimensions in mm
AG = actuator size

1) **Connection type**
Code 59: Spigot ASME BPE / DIN 11866 series C

Spigot without bypass code 59

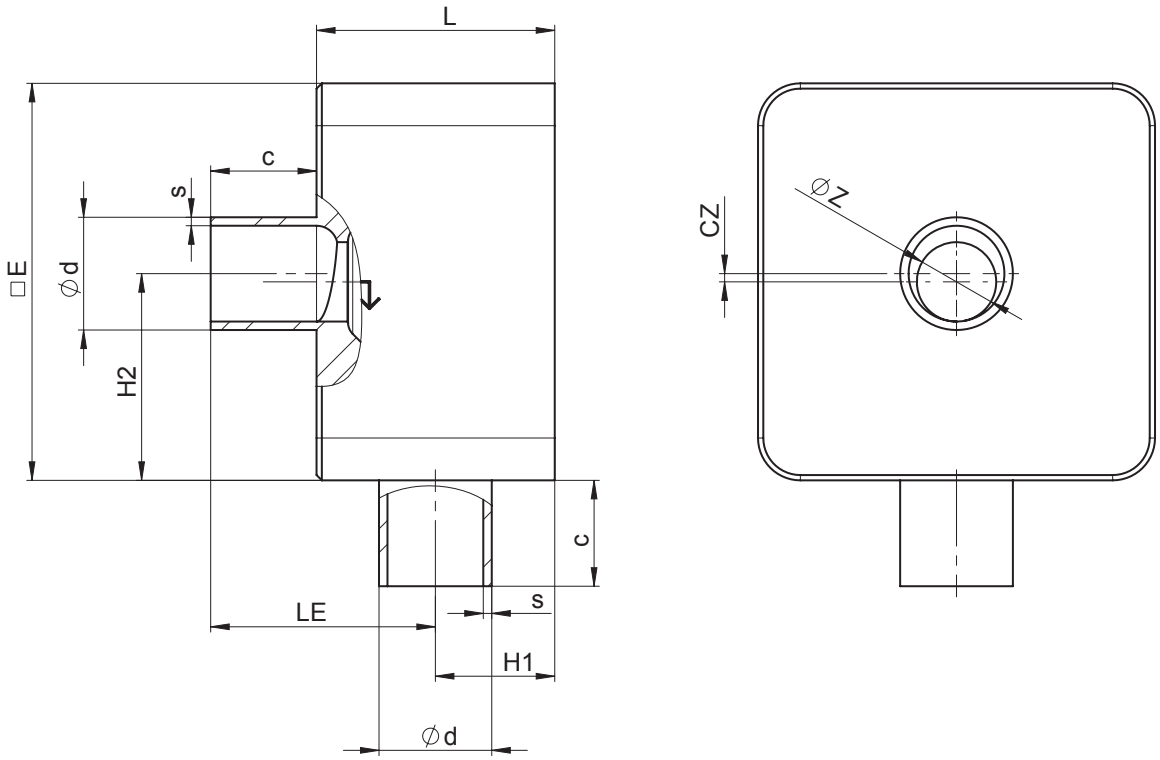

AG	DN	Connection type code 59 [1]										
		Seat size (code)	L	□E	c	Øz	LE	H1	H2	cz	Ød	s
4	40	K	73.0	112.0	20.0	32.0	62.0	31.0	54.6	1.4	38.1	1.65
	50	K	73.0	112.0	20.0	32.0	55.6	37.4	48.25	7.75	50.8	1.65
		M	73.0	112.0	20.0	38.0	55.6	37.4	51.25	4.75	50.8	1.65
5	65	N	84.0	140.0	20.0	50.0	60.3	43.7	84.9	5.1	63.5	1.65

Dimensions in mm
AG = actuator size

1) **Connection type**
Code 59: Spigot ASME BPE / DIN 11866 series C

Spigot without bypass code 60

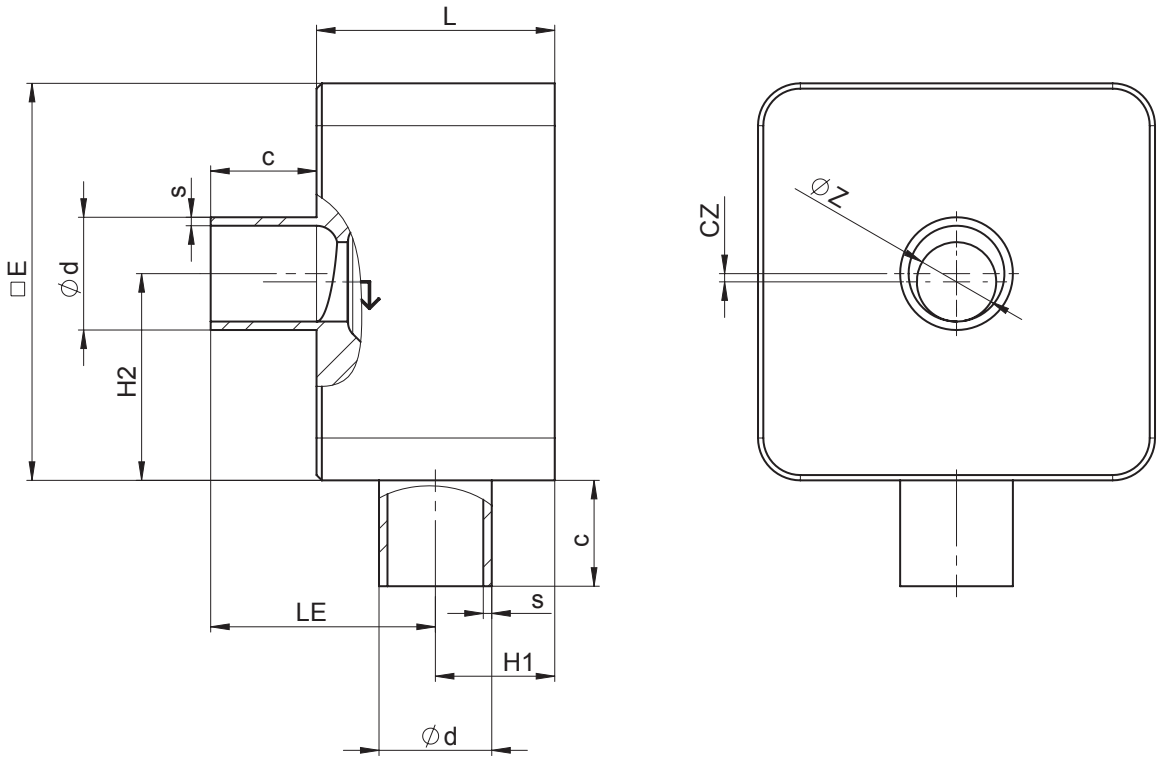

AG	DN	Connection type code 60 [1]										
		Seat size (code)	L	□E	c	Øz	LE	H1	H2	cz	Ød	s
2	8	A	45.0	75.0	20.0	2.0	46.3	18.7	41.65	4.15	13.5	1.6
		B	45.0	75.0	20.0	4.0	46.3	18.7	40.65	3.15	13.5	1.6
		C	45.0	75.0	20.0	6.0	46.3	18.7	39.65	2.15	13.5	1.6
	10	A	45.0	75.0	20.0	2.0	44.5	20.5	43.50	6.00	17.2	1.6
		B	45.0	75.0	20.0	4.0	44.5	20.5	42.50	5.00	17.2	1.6
		C	45.0	75.0	20.0	6.0	44.5	20.5	41.50	4.00	17.2	1.6
		D	45.0	75.0	20.0	8.0	44.5	20.5	40.50	3.00	17.2	1.6
	15	A	45.0	75.0	20.0	2.0	42.4	22.6	45.55	8.05	21.3	1.6
		B	45.0	75.0	20.0	4.0	42.4	22.6	44.55	7.05	21.3	1.6
		C	45.0	75.0	20.0	6.0	42.4	22.6	43.55	6.05	21.3	1.6
		D	45.0	75.0	20.0	8.0	42.4	22.6	42.55	5.05	21.3	1.6
		E	45.0	75.0	20.0	10.0	42.4	22.6	41.55	4.05	21.3	1.6
		G	45.0	75.0	20.0	15.0	42.4	22.6	39.05	1.55	21.3	1.6
3	20	H	55.0	95.0	25.0	20.0	54.6	25.4	49.40	1.90	29.6	1.6
	25	H	55.0	95.0	25.0	20.0	54.6	28.4	52.40	4.90	33.7	2.0
		J	55.0	95.0	25.0	25.0	51.6	28.4	49.90	2.40	33.7	2.0

Dimensions in mm
AG = actuator size

1) **Connection type**
Code 60: Spigot ISO 1127/EN 10357 series C/DIN 11866 series B

Spigot without bypass code 60

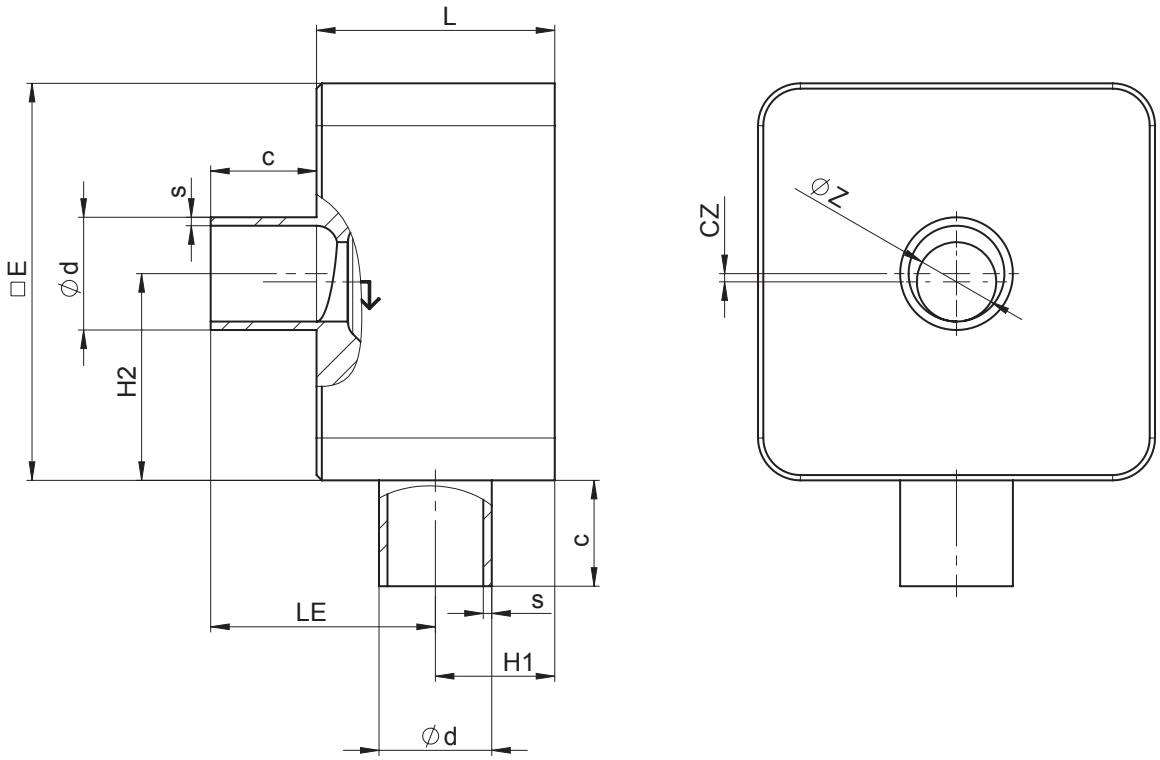

AG	DN	Connection type code 60 [1]										
		Seat size (code)	L	□E	c	Øz	LE	H1	H2	cz	Ød	s
4	32	K	73.0	112.0	20.0	32.0	60.8	32.8	52.8	3.2	42.4	2.0
	40	K	73.0	112.0	20.0	32.0	57.2	35.8	49.85	6.15	48.3	2.0
		M	73.0	112.0	20.0	38.0	57.2	35.8	52.85	3.15	48.3	2.0
5	50	N	84.0	140.0	20.0	50.0	62.3	41.7	93.15	3.15	60.3	2.0

Dimensions in mm
AG = actuator size

1) **Connection type**
Code 60: Spigot ISO 1127/EN 10357 series C/DIN 11866 series B

Spigot with bypass code 0

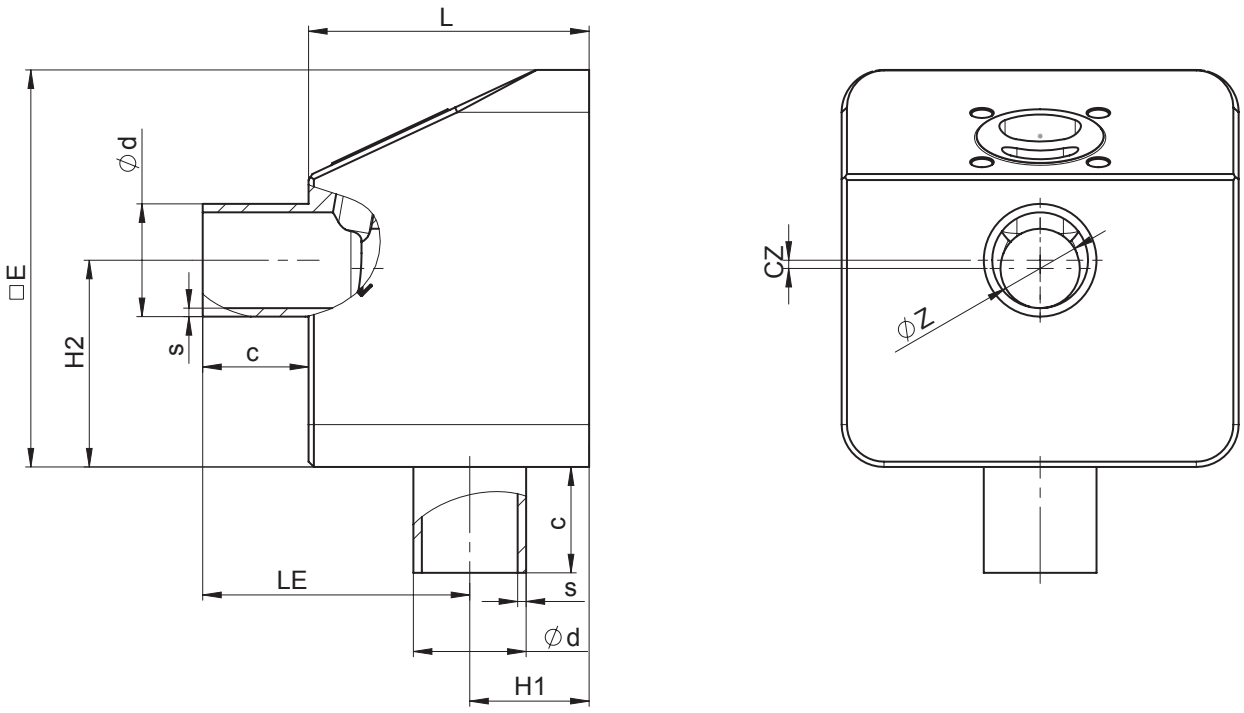

AG	DN	Connection type code 0 [1]									
		Seat size (code)	L	□E	c	Øz	LE	H1	H2	cz	Ød	s
2	15	A	53.0	75.0	20.0	2.0	52.0	21.0	44.0	6.5	18.0	1.5
		B	53.0	75.0	20.0	4.0	52.0	21.0	43.0	5.5	18.0	1.5
		C	53.0	75.0	20.0	6.0	52.0	21.0	42.0	4.5	18.0	1.5
		D	53.0	75.0	20.0	8.0	52.0	21.0	41.0	3.5	18.0	1.5
		E	53.0	75.0	20.0	10.0	52.0	21.0	40.0	2.5	18.0	1.5
		G	53.0	75.0	20.0	15.0	52.0	21.0	37.5	-	18.0	1.5

Dimensions in mm
AG = actuator size

1) **Connection type**
Code 0: Spigot DIN

Spigot with bypass code 17

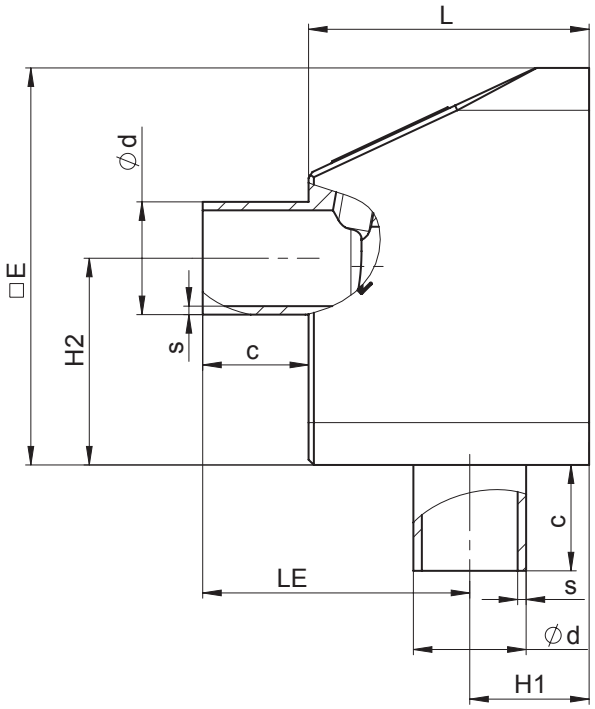

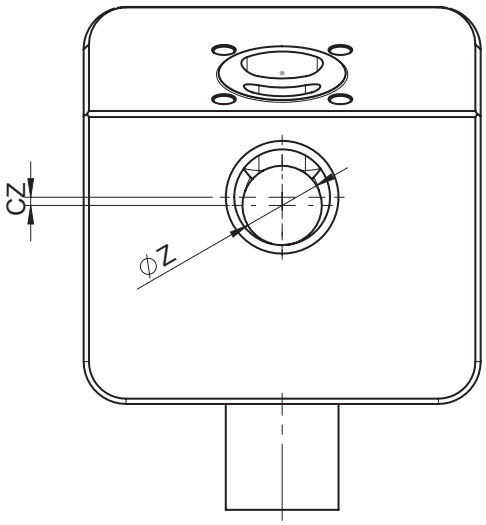

AG	DN	Connection type code 17 [1]										
		Seat size (code)	L	□E	c	Øz	LE	H1	H2	cz	Ød	s
2	8	A	53.0	75.0	20.0	2.0	55.5	17.5	40.5	3.0	10.0	1.0
		B	53.0	75.0	20.0	4.0	55.5	17.5	39.5	2.0	10.0	1.0
		C	53.0	75.0	20.0	6.0	55.5	17.5	38.5	1.0	10.0	1.0
	10	A	53.0	75.0	20.0	2.0	54.5	18.5	41.5	4.0	13.0	1.5
		B	53.0	75.0	20.0	4.0	54.5	18.5	40.5	3.0	13.0	1.5
		C	53.0	75.0	20.0	6.0	54.5	18.5	39.5	2.0	13.0	1.5
		D	53.0	75.0	20.0	8.0	54.5	18.5	38.5	1.0	13.0	1.5
	15	A	53.0	75.0	20.0	2.0	51.5	21.5	44.5	7.0	19.0	1.5
		B	53.0	75.0	20.0	4.0	51.5	21.5	43.5	6.0	19.0	1.5
		C	53.0	75.0	20.0	6.0	51.5	21.5	42.5	5.0	19.0	1.5
		D	53.0	75.0	20.0	8.0	51.5	21.5	41.5	4.0	19.0	1.5
		E	53.0	75.0	20.0	10.0	51.5	21.5	40.5	3.0	19.0	1.5
		G	53.0	75.0	20.0	15.0	51.5	21.5	38.0	0.5	19.0	1.5

Dimensions in mm
AG = actuator size

1) **Connection type**
Code 17: Spigot EN 10357 series A (formerly DIN 11850 series 2)/DIN 11866 series A

Spigot with bypass code 59

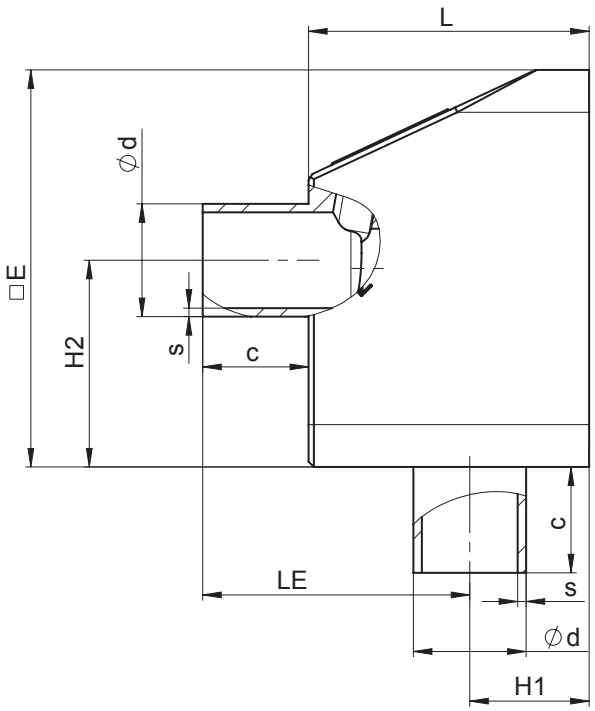

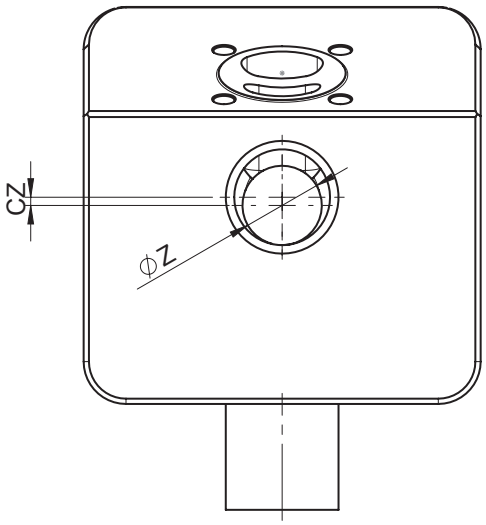

AG	DN	Connection type code 59 [1]										
		Seat size (code)	L	□E	c	Øz	LE	H1	H2	cz	Ød	s
2	15	A	53.0	75.0	20.0	2.0	54.8	18.2	41.20	3.70	12.70	1.65
		B	53.0	75.0	20.0	4.0	54.8	18.2	40.20	2.70	12.70	1.65
		C	53.0	75.0	20.0	6.0	54.8	18.2	39.20	1.70	12.70	1.65
		D	53.0	75.0	20.0	8.0	54.8	18.2	38.20	0.70	12.70	1.65
	20	A	53.0	75.0	20.0	2.0	51.6	21.4	44.38	3.70	12.70	1.65
		B	53.0	75.0	20.0	4.0	51.6	21.4	43.38	2.70	12.70	1.65
		C	53.0	75.0	20.0	6.0	51.6	21.4	42.38	1.70	12.70	1.65
		D	53.0	75.0	20.0	8.0	51.6	21.4	41.38	0.70	12.70	1.65
		E	53.0	75.0	20.0	10.0	51.6	21.4	40.38	2.88	19.05	1.65
		G	53.0	75.0	20.0	15.0	51.6	21.4	37.88	0.38	19.05	1.65

Dimensions in mm
AG = actuator size

1) **Connection type**
Code 59: Spigot ASME BPE / DIN 11866 series C

Spigot with bypass code 60

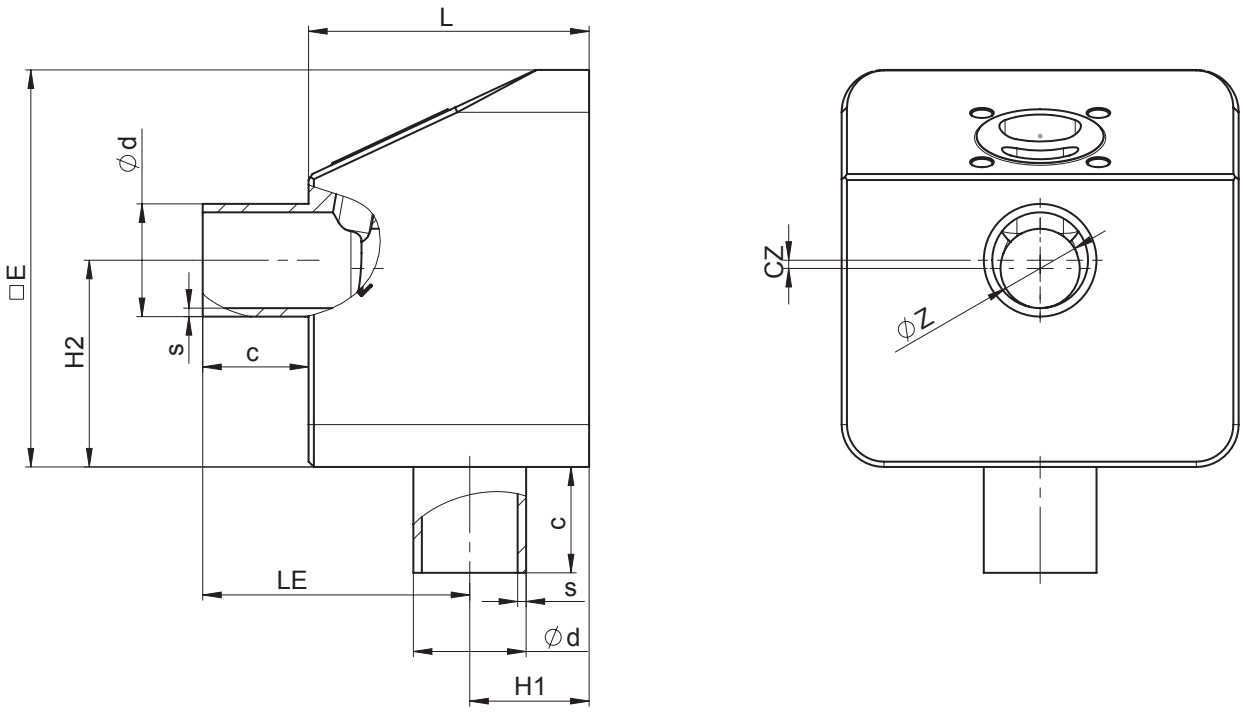

AG	DN	Connection type code 60 [1]										
		Seat size (code)	L	□E	c	Øz	LE	H1	H2	cz	Ød	s
2	8	A	53.0	75.0	20.0	2.0	54.3	18.7	41.65	4.15	13.5	1.6
		B	53.0	75.0	20.0	4.0	54.3	18.7	40.65	3.15	13.5	1.6
		C	53.0	75.0	20.0	6.0	54.3	18.7	39.65	2.15	13.5	1.6
	10	A	53.0	75.0	20.0	2.0	52.5	20.7	43.50	6.00	17.2	1.6
		B	53.0	75.0	20.0	4.0	52.5	20.7	42.50	5.00	17.2	1.6
		C	53.0	75.0	20.0	6.0	52.5	20.5	41.50	4.00	17.2	1.6
		D	53.0	75.0	20.0	8.0	52.5	20.5	40.50	3.00	17.2	1.6
	15	A	53.0	75.0	20.0	2.0	50.4	22.6	45.55	8.05	21.3	1.6
		B	53.0	75.0	20.0	4.0	50.4	22.6	44.55	7.05	21.3	1.6
		C	53.0	75.0	20.0	6.0	50.4	22.6	43.55	6.05	21.3	1.6
		D	53.0	75.0	20.0	8.0	50.4	22.6	42.55	5.05	21.3	1.6
		E	53.0	75.0	20.0	10.0	50.4	22.6	41.55	4.05	21.3	1.6
		G	53.0	75.0	20.0	15.0	50.4	22.6	39.05	1.55	21.3	1.6

Dimensions in mm
AG = actuator size

1) **Connection type**
Code 60: Spigot ISO 1127/EN 10357 series C/DIN 11866 series B

Clamp without bypass code 82

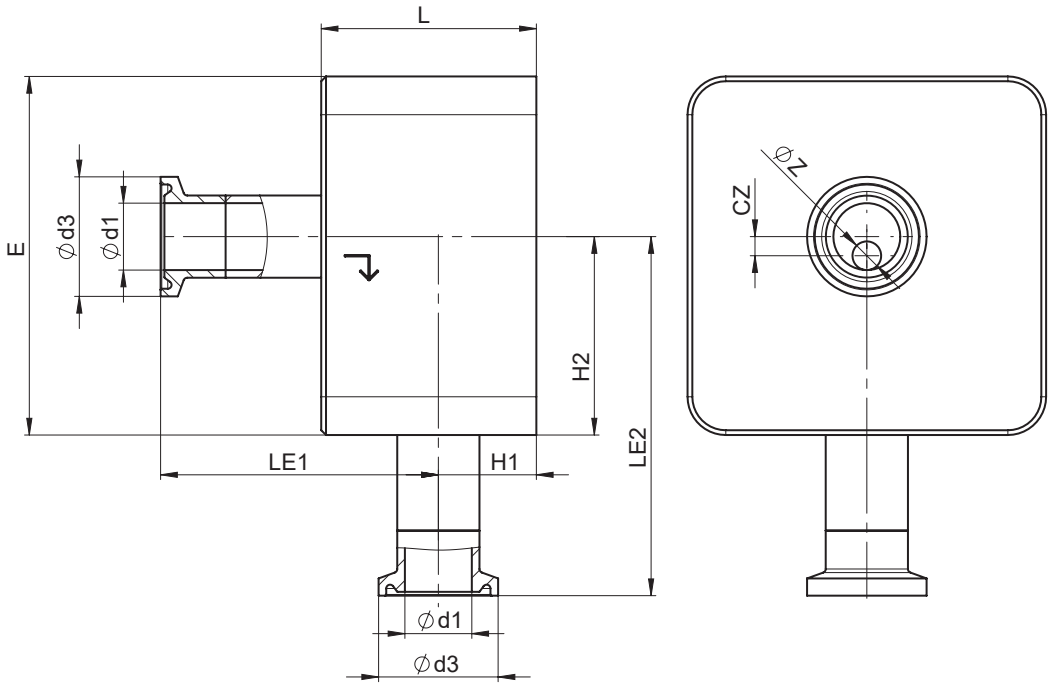

AG	DN	Connection type code 82 [1]										
		Seat size (code)	L	□E	Øz	LE1	LE2	H1	H2	cz	Ød1	Ød3
2	8	A	45.0	75.0	2.0	59.3	74.65	18.7	41.65	4.15	10.3	25.4
		B	45.0	75.0	4.0	59.3	73.65	18.7	40.65	3.15	10.3	25.4
		C	45.0	75.0	6.0	59.3	72.65	18.7	39.65	2.15	10.3	25.4
	10	A	45.0	75.0	2.0	57.5	76.50	20.5	43.50	6.00	14.0	25.4
		B	45.0	75.0	4.0	57.5	75.50	20.5	42.50	5.00	14.0	25.4
		C	45.0	75.0	6.0	57.5	74.50	20.5	41.50	4.00	14.0	25.4
		D	45.0	75.0	8.0	57.5	73.50	20.5	40.50	3.00	14.0	25.4
	15	A	45.0	75.0	2.0	55.4	78.55	22.6	45.55	8.05	18.1	50.5
		B	45.0	75.0	4.0	55.4	77.55	22.6	44.55	7.05	18.1	50.5
		C	45.0	75.0	6.0	55.4	76.55	22.6	43.55	6.05	18.1	50.5
		D	45.0	75.0	8.0	55.4	75.55	22.6	42.55	5.05	18.1	50.5
		E	45.0	75.0	10.0	55.4	74.55	22.6	41.55	4.05	18.1	50.5
		G	45.0	75.0	15.0	55.4	72.05	22.6	39.05	1.55	18.1	50.5
3	20	H	55.0	95.0	20.0	66.0	87.40	27.0	49.40	1.90	19.0	50.5
	25	H	55.0	95.0	20.0	62.6	90.40	30.4	52.40	4.90	25.0	50.5
		J	55.0	95.0	25.0	62.6	87.90	30.4	49.90	2.40	25.0	50.5

Dimensions in mm
AG = actuator size

1) **Connection type**
Code 82: Clamp DIN 32676 series B

Clamp without bypass code 82

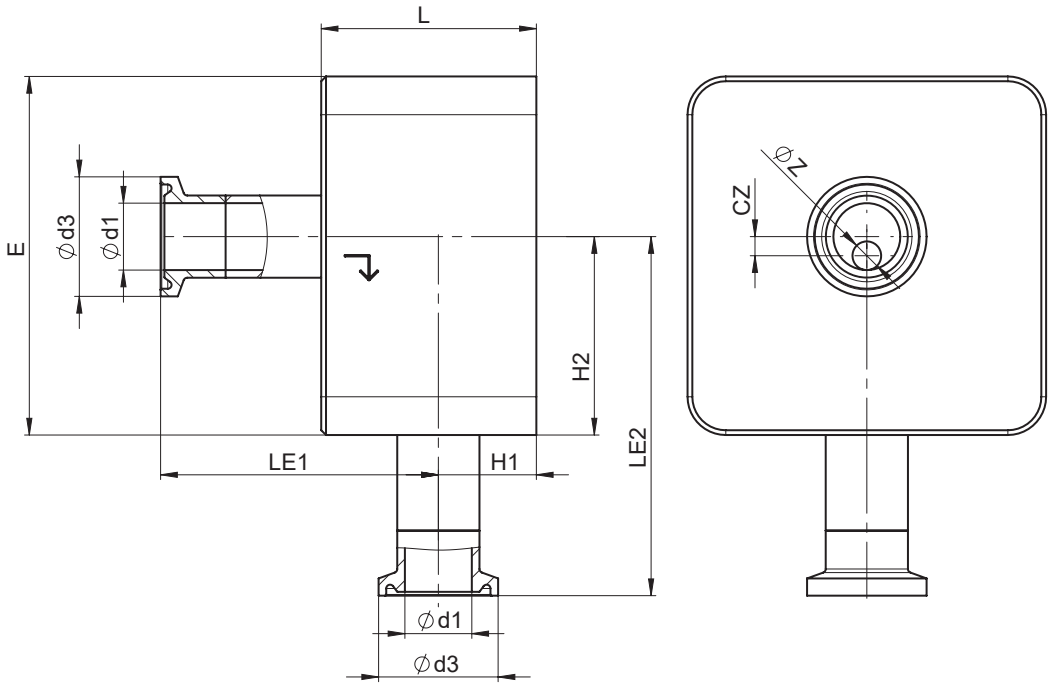

AG	DN	Connection type code 82 [1]										
		Seat size (code)	L	□E	Øz	LE1	LE2	H1	H2	cz	Ød1	Ød3
4	32	K	73.0	112.0	32.0	73.8	85.8	32.8	52.8	3.2	38.4	64.0
	40	K	73.0	112.0	32.0	70.2	82.85	35.8	49.85	6.15	44.3	64.0
		M	73.0	112.0	38.0	70.2	85.85	35.8	52.85	3.15	44.3	64.0
5	50	N	84.0	140.0	50.0	75.3	126.15	41.7	93.15	3.15	56.3	77.5

Dimensions in mm
AG = actuator size

1) **Connection type**
Code 82: Clamp DIN 32676 series B

Clamp without bypass code 86

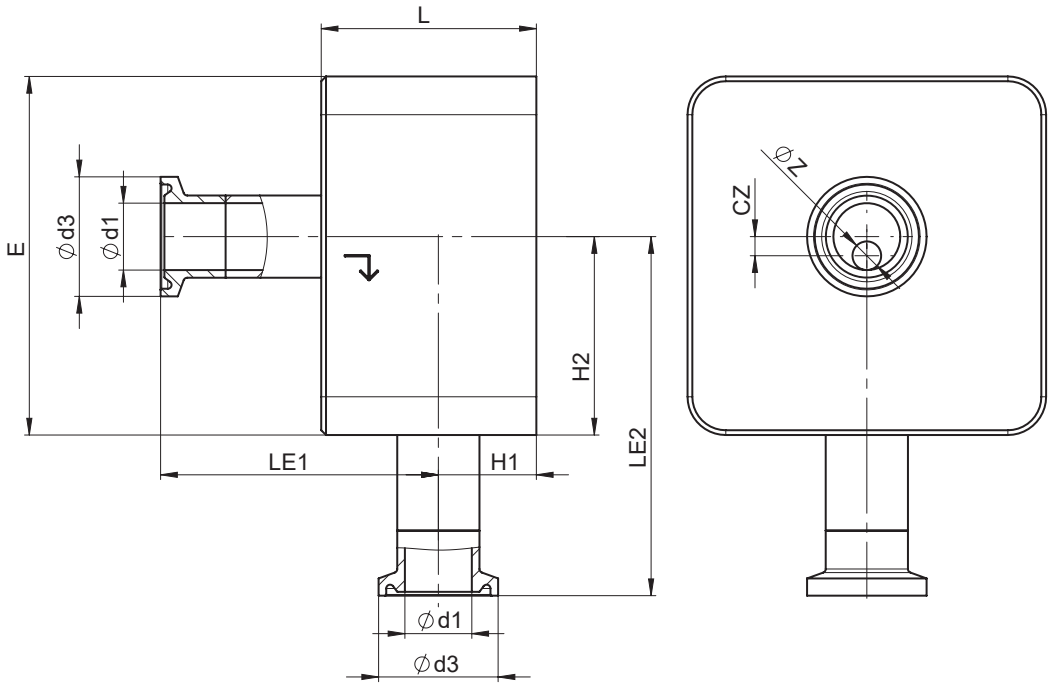

AG	DN	Connection type code 86 [1]										
		Seat size (code)	L	□E	Øz	LE1	LE2	H1	H2	cz	Ød1	Ød3
2	8	A	45.0	75.0	2.0	60.5	73.5	17.5	40.5	3.0	8.0	25.0
		B	45.0	75.0	4.0	60.5	72.5	17.5	39.5	2.0	8.0	25.0
		C	45.0	75.0	6.0	60.5	71.5	17.5	38.5	1.0	8.0	25.0
	10	A	45.0	75.0	2.0	59.5	74.5	18.5	41.5	4.0	10.0	34.0
		B	45.0	75.0	4.0	59.5	73.5	18.5	40.5	3.0	10.0	34.0
		C	45.0	75.0	6.0	59.5	72.5	18.5	39.5	2.0	10.0	34.0
		D	45.0	75.0	8.0	59.5	71.5	18.5	38.5	1.0	10.0	34.0
	15	A	45.0	75.0	2.0	56.5	77.5	21.5	44.5	7.0	16.0	34.0
		B	45.0	75.0	4.0	56.5	76.5	21.5	43.5	6.0	16.0	34.0
		C	45.0	75.0	6.0	56.5	75.5	21.5	42.5	5.0	16.0	34.0
		D	45.0	75.0	8.0	56.5	74.5	21.5	41.5	4.0	16.0	34.0
		E	45.0	75.0	10.0	56.5	73.5	21.5	40.5	3.0	16.0	34.0
		G	45.0	75.0	15.0	56.5	71.0	21.5	38.0	0.5	16.0	34.0
3	20	H	55.0	95.0	20.0	69.5	85.5	23.0	47.5	0.0	20.0	34.0
	25	H	55.0	95.0	20.0	65.0	88.0	28.1	50.0	2.5	26.0	50.5
		J	55.0	95.0	25.0	65.0	88.5	28.1	47.5	0.0	26.0	50.5

Dimensions in mm
AG = actuator size

1) **Connection type**
Code 86: Clamp DIN 32676 series A

Clamp without bypass code 86

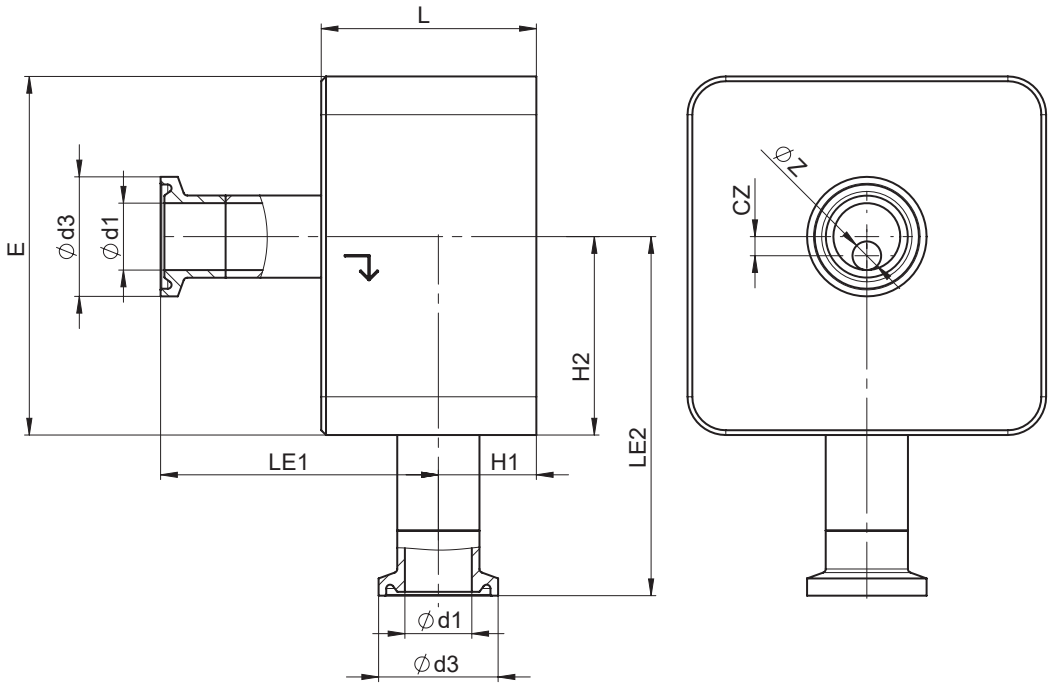

AG	DN	Connection type code 86 [1]										
		Seat size (code)	L	□E	Øz	LE1	LE2	H1	H2	cz	Ød1	Ød3
4	32	K	73.0	112.0	32.0	75.0	87.5	31.0	54.5	1.5	32.0	50.5
	40	K	73.0	112.0	32.0	73.4	86.0	32.6	53.0	3.0	38.0	50.5
		M	73.0	112.0	38.0	73.4	89.0	32.6	56.0	0.0	38.0	50.5
5	50	N	84.0	140.0	50.0	78.4	123.0	38.6	90.0	0.0	50.0	64.0

Dimensions in mm
AG = actuator size

1) **Connection type**
Code 86: Clamp DIN 32676 series A

Clamp without bypass code 88

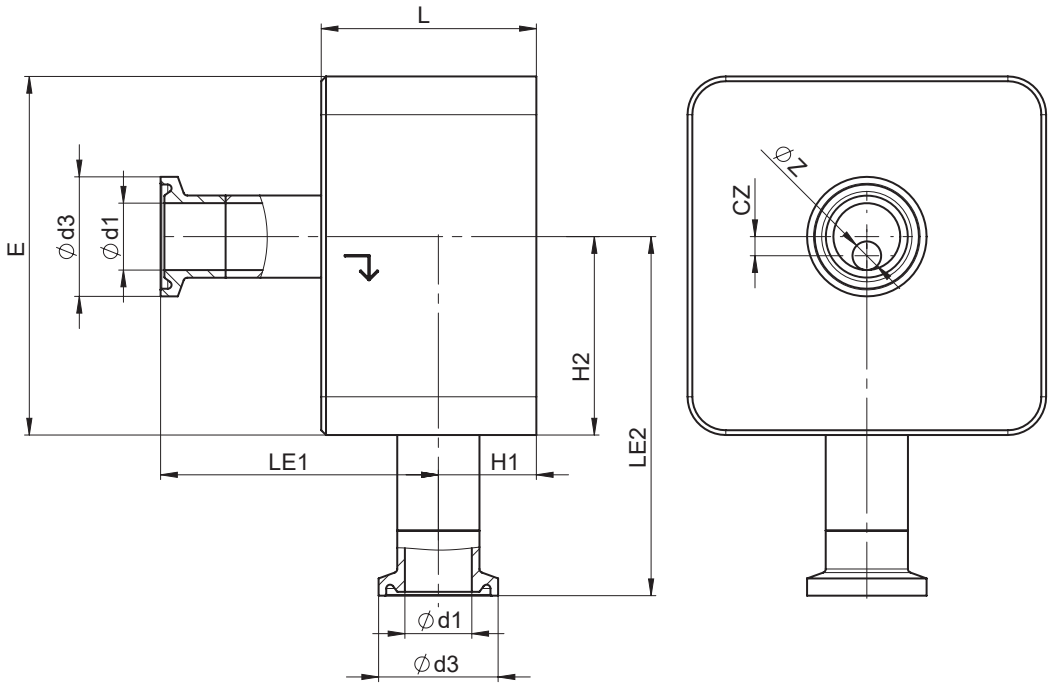

AG	DN	Connection type code 88 [1]										
		Seat size (code)	L	□E	Øz	LE1	LE2	H1	H2	cz	Ød1	Ød3
2	15	A	45.0	75.0	2.0	59.8	74.20	18.2	41.20	3.70	9.40	25.0
		B	45.0	75.0	4.0	59.8	73.20	18.2	40.20	2.70	9.40	25.0
		C	45.0	75.0	6.0	59.8	72.20	18.2	39.20	1.70	9.40	25.0
		D	45.0	75.0	8.0	59.8	71.20	18.2	38.20	0.70	9.40	25.0
	20	A	45.0	75.0	2.0	56.5	77.38	21.4	44.38	6.88	15.75	25.0
		B	45.0	75.0	4.0	56.5	76.38	21.4	43.38	5.88	15.75	25.0
		C	45.0	75.0	6.0	56.5	75.38	21.4	42.38	4.88	15.75	25.0
		D	45.0	75.0	8.0	56.5	74.38	21.4	41.38	3.88	15.75	25.0
		E	45.0	75.0	10.0	56.5	73.38	21.4	40.38	2.88	15.75	25.0
		G	45.0	75.0	15.0	56.5	70.88	21.4	37.88	0.38	15.75	25.0
3	25	H	55.0	95.0	20.0	66.8	87.60	26.3	48.60	1.10	22.10	50.5

Dimensions in mm
AG = actuator size

1) **Connection type**
Code 88: Clamp ASME BPE

Clamp without bypass code 88

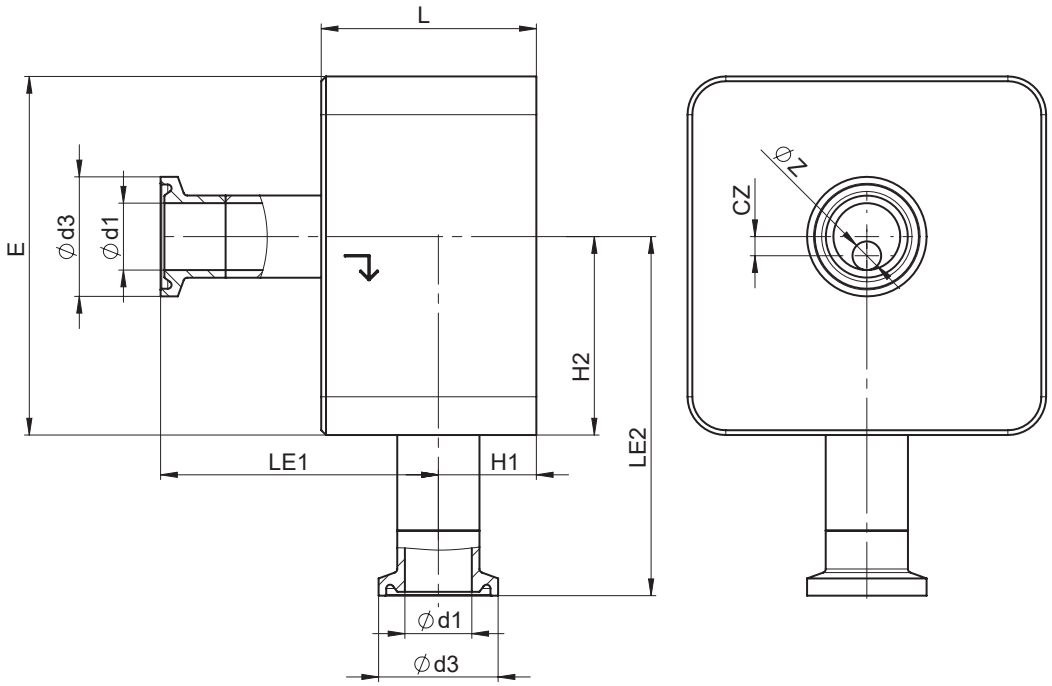

AG	DN	Connection type code 88 [1]										
		Seat size (code)	L	□E	Øz	LE1	LE2	H1	H2	cz	Ød1	Ød3
4	40	K	73.0	112.0	32.0	75.1	87.6	31.0	54.6	1.4	34.8	50.5
	50	K	73.0	112.0	32.0	68.7	81.25	37.4	48.25	7.75	47.5	64.0
		M	73.0	112.0	38.0	68.7	84.25	37.4	51.25	4.75	47.5	64.0
5	65	N	84.0	140.0	50.0	73.1	117.6	43.7	84.9	5.1	60.2	77.5

Dimensions in mm
AG = actuator size

1) **Connection type**
Code 88: Clamp ASME BPE

Clamp with bypass code 82

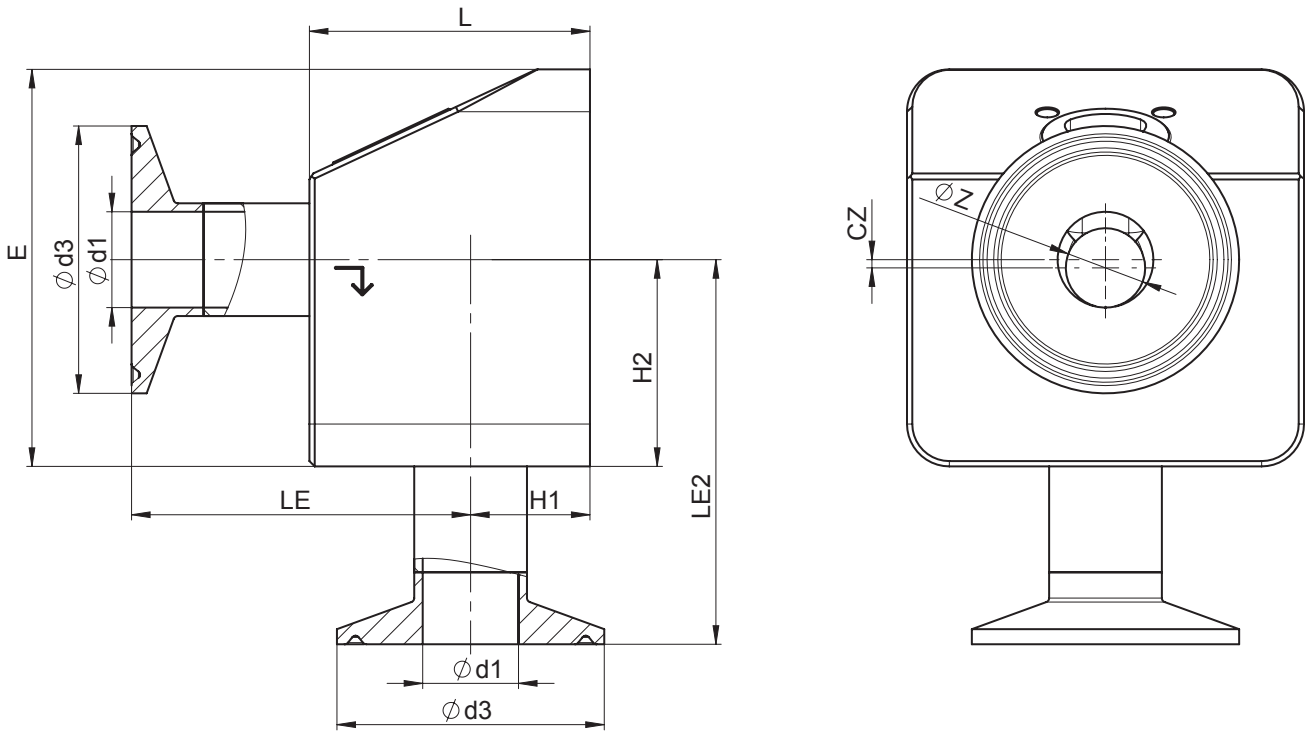

AG	DN	Connection type code 82 [1]										
		Seat size (code)	L	□E	Øz	LE1	LE2	H1	H2	cz	Ød1	Ød3
2	8	A	53.0	75.0	2.0	67.3	74.65	18.7	41.65	4.15	10.3	25.4
		B	53.0	75.0	4.0	67.3	73.65	18.7	40.65	3.15	10.3	25.4
		C	53.0	75.0	6.0	67.3	72.65	18.7	39.65	2.15	10.3	25.4
	10	A	53.0	75.0	2.0	65.5	76.50	20.5	43.50	6.00	14.0	25.4
		B	53.0	75.0	4.0	65.5	75.50	20.5	42.50	5.00	14.0	25.4
		C	53.0	75.0	6.0	65.5	74.50	20.5	41.5	4.00	14.0	25.4
		D	53.0	75.0	8.0	65.5	73.50	20.5	40.5	3.00	14.0	25.4
	15	A	53.0	75.0	2.0	63.4	78.55	22.6	45.55	8.05	18.1	50.5
		B	53.0	75.0	4.0	63.4	77.55	22.6	44.55	7.05	18.1	50.5
		C	53.0	75.0	6.0	63.4	76.55	22.6	43.55	6.05	18.1	50.5
		D	53.0	75.0	8.0	63.4	75.55	22.6	42.55	5.05	18.1	50.5
		E	53.0	75.0	10.0	63.4	74.55	22.6	41.55	4.05	18.1	50.5
		G	53.0	75.0	15.0	63.4	72.05	22.6	39.05	1.55	18.1	50.5

Dimensions in mm
AG = actuator size

1) **Connection type**
Code 82: Clamp DIN 32676 series B

Clamp with bypass code 86

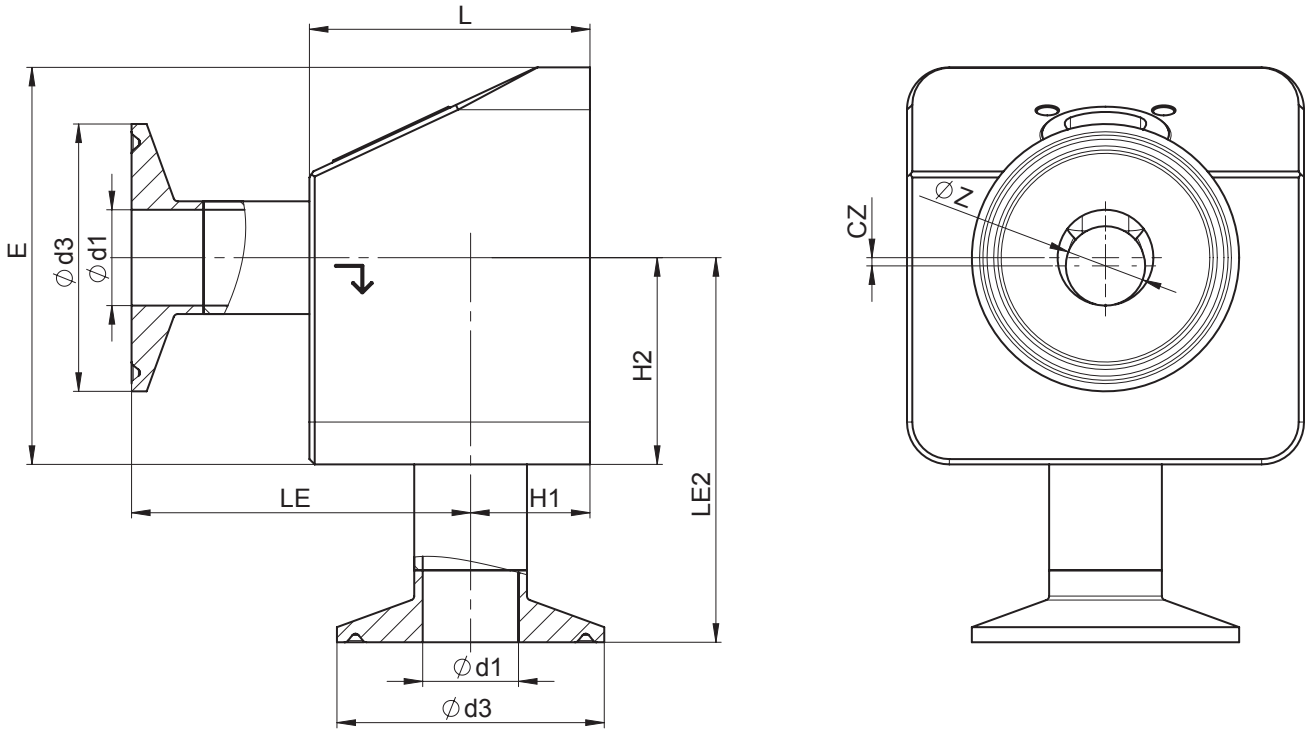

AG	DN	Connection type code 86 [1]										
		Seat size (code)	L	□E	Øz	LE1	LE2	H1	H2	cz	Ød1	Ød3
2	8	A	53.0	75.0	2.0	68.5	73.5	17.5	40.5	3.0	8.0	25.0
		B	53.0	75.0	4.0	68.5	72.5	17.5	39.5	2.0	8.0	25.0
		C	53.0	75.0	6.0	68.5	71.5	17.5	38.5	1.0	8.0	25.0
	10	A	53.0	75.0	2.0	67.5	74.5	18.5	41.5	4.0	10.0	34.0
		B	53.0	75.0	4.0	67.5	73.5	18.5	40.5	3.0	10.0	34.0
		C	53.0	75.0	6.0	67.5	72.5	18.5	39.5	2.0	10.0	34.0
		D	53.0	75.0	8.0	67.5	71.5	18.5	38.5	1.0	10.0	34.0
	15	A	53.0	75.0	2.0	64.5	77.5	21.5	44.5	7.0	16.0	34.0
		B	53.0	75.0	4.0	64.5	76.5	21.5	43.5	6.0	16.0	34.0
		C	53.0	75.0	6.0	64.5	75.5	21.5	42.5	5.0	16.0	34.0
		D	53.0	75.0	8.0	64.5	74.5	21.5	41.5	4.0	16.0	34.0
		E	53.0	75.0	10.0	64.5	73.5	21.5	40.5	3.0	16.0	34.0
		G	53.0	75.0	15.0	64.5	71.0	21.5	38.0	0.5	16.0	34.0

Dimensions in mm
AG = actuator size

1) **Connection type**
Code 86: Clamp DIN 32676 series A

Clamp with bypass code 88

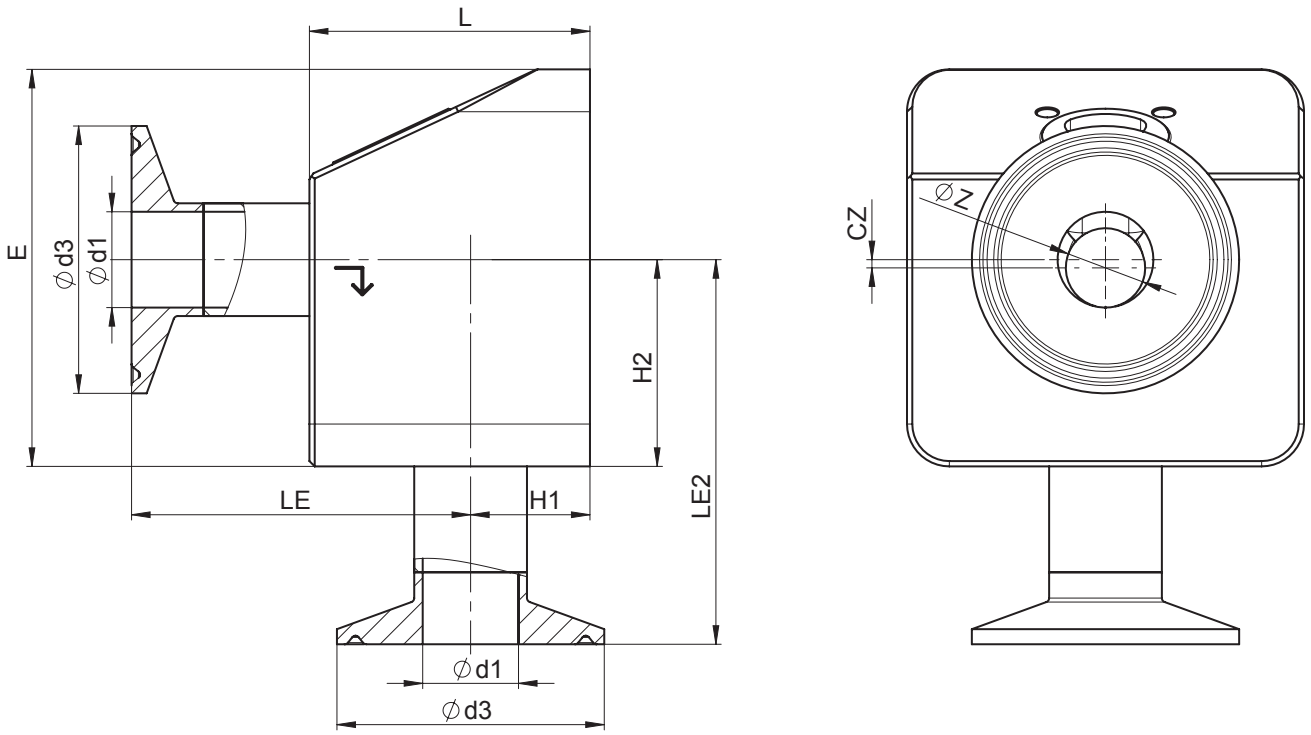

AG	DN	Connection type code 88 [1]										
		Seat size (code)	L	□E	Øz	LE1	LE2	H1	H2	cz	Ød1	Ød3
2	15	A	53.0	75.0	2.0	67.8	74.20	18.2	41.20	3.70	9.40	25.0
		B	53.0	75.0	4.0	67.8	73.20	18.2	40.20	2.70	9.40	25.0
		C	53.0	75.0	6.0	67.8	72.20	18.2	39.20	1.70	9.40	25.0
		D	53.0	75.0	8.0	67.8	71.20	18.2	38.20	0.70	9.40	25.0
	20	A	53.0	75.0	2.0	64.6	77.38	21.4	44.38	6.88	15.75	25.0
		B	53.0	75.0	4.0	64.6	76.38	21.4	43.38	5.88	15.75	25.0
		C	53.0	75.0	6.0	64.6	75.38	21.4	42.38	4.88	15.75	25.0
		D	53.0	75.0	8.0	64.6	74.38	21.4	41.38	3.88	15.75	25.0
		E	53.0	75.0	10.0	64.6	73.38	21.4	40.38	2.88	15.75	25.0
		G	53.0	75.0	15.0	64.6	70.88	21.4	37.88	0.38	15.75	25.0

Dimensions in mm
AG = actuator size

1) **Connection type**
Code 88: Clamp ASME BPE

Subject to alteration | 11.2023 | 88700851

GEMÜ Gebr. Müller Apparatebau GmbH & Co. KG
Fritz-Müller-Straße 6-8, 74653 Ingelfingen-Criesbach, Germany
Phone +49 (0) 7940 1230 · info@gemue.de
www.gemu-group.com