GEMÜ R649 eSyDrive

Motorized diaphragm valve

Features

- Hermetic separation between medium and actuator
- Installation for optimized draining is possible
- Open/Close function, positioner and process controller
- Force and speed are variably adjustable
- Extensive diagnostic functions
- Operable via web interface eSy-Web or Modbus TCP
- Various functions of add-on components and accessories are already integrated (e.g. position indicators, stroke limiters, etc.)

Description

The GEMÜ R649 diaphragm valve is actuated by a motorized hollow shaft actuator. It is based on technology that does not use brushes or sensors and therefore guarantees high performance and a long service life. In addition to Open/Close applications, the valve is ideal for variable and complex control applications. The actuator has an integrated web server for parameterization and diagnostics purposes.

Technical specifications

- **Media temperature:** -10 to 80 °C
- **Ambient temperature:** -10 Up to 50 °C
- **Operating pressure :** 0 Up to 10 bar
- **Nominal sizes:** DN 12 to 65
- **Body configurations:** 2/2-way body
- **Connection types:** Flange I Flare I Solvent cement socket I Spigot I Threaded connection I Union end
- **Connection standards:** ANSI I BS I DIN I EN I ISO I JIS
- **Body materials:** ABS I Inliner PP-H, grey / outliner PP, reinforced I Inliner PVDF/outliner PP, reinforced I PP, reinforced I PP-H, natural I PVC-U I PVDF
- **Diaphragm materials:** EPDM I FKM I NBR I PTFE/EPDM
- **Supply voltage:** 24 V DC
- **Actuating speed:** max. 6 mm/s
- **Protection class:** IP 65
- **Conformities:** EAC I FDA I NSF I System 1+

Technical data depends on the respective configuration

Certified to NSF/ANSI/CAN 61

further information
webcode: GW-R649

Product description

Construction

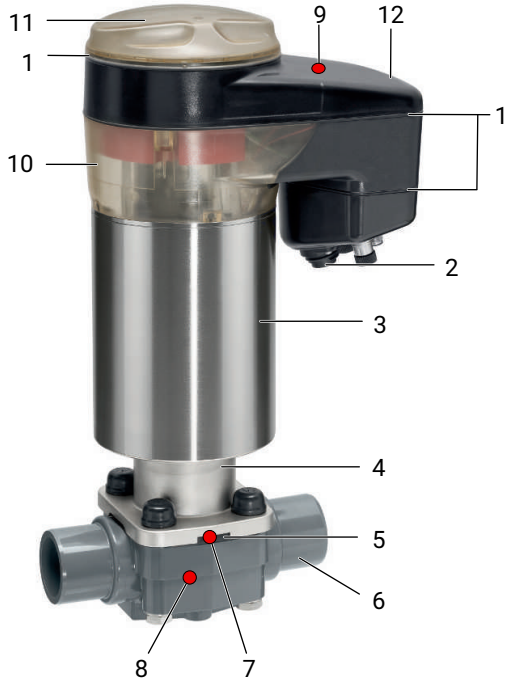

Item	Name	Materials
1	O-rings	EPDM
2	Electrical connections	
3	Actuator base	1.4301 / 1.4305
4	Distance piece with leak detection hole	1.4408
5	Diaphragm	EPDM, FKM, NBR, PTFE/EPDM
6	Valve body	PVC-U, grey ABS PP reinforced PVDF Inliner PP-H, grey Outliner PP, reinforced Inliner PVDF/outliner PP, reinforced PP-H, natural
7	CONEXO diaphragm RFID chip (see Conexo information)	
8	CONEXO body RFID chip (see Conexo information)	
9	CONEXO actuator RFID chip (see Conexo information)	
10	Optical position indicator	PESU (AG0, AG2) PC (AG1)
11	Cover with high visibility LED, manual override and on-site control	PESU (AG0, AG2) PC (AG1)
12	Actuator top	PESU black (AG0, AG2) PC black (AG1)

GEMÜ CONEXO

The interaction of valve components that are equipped with RFID chips and an associated IT infrastructure actively increase process reliability.

Thanks to serialization, every valve and every relevant valve component such as the body, actuator or diaphragm, and even automation components, can be clearly traced and read using the CONEXO pen RFID reader. The CONEXO app, which can be installed on mobile devices, not only facilitates and improves the "installation qualification" process, but also makes the maintenance process much more transparent and easier to document. The app actively guides the maintenance technician through the maintenance schedule and directly provides him with all the information assigned to the valve, such as test reports, testing documentation and maintenance histories. The CONEXO portal acts as a central element, helping to collect, manage and process all data.

For further information on GEMÜ CONEXO please visit:
www.gemu-group.com/conexo

Ordering

GEMÜ Conexo must be ordered separately with the ordering option "CONEXO".

Availability

Availability of valve bodies

Spigot

MG	DN	Connection type code [1]							
		0			20		28	30	7X
		Material code [2]							
		1	5, 20	71, 75	20	71, 75	20	1, 4	1, 4, 71, 75
10	**15**	-	-	-	-	-	X	-	X
20	**15**	X	-	X	-	X	-	X	X
	20	X	-	X	-	X	-	X	X
	25	X	-	X	-	X	-	X	X
25	**32**	X	-	X	-	X	-	X	X
40	**40**	X	-	X	-	X	-	X	X
	50	X	-	X	-	X	-	X	X
50	**65**	X	X	-	X	-	-	X	-

MG = diaphragm size, X = standard

1) **Connection type**
Code 0: Spigot DIN
Code 20: Spigot for IR butt welding
Code 28: Spigot for IR butt welding, BCF
Code 30: Spigot – inch, for welding or solvent cementing, depending on the body material
Code 7X: Body with threaded spigots for unions

2) **Valve body material**
Code 1: PVC-U, grey
Code 4: ABS
Code 5: PP, reinforced
Code 20: PVDF
Code 71: Inliner PP-H, grey, outliner PP, reinforced
Code 75: Inliner PVDF/outliner PP, reinforced

Union end

MG	DN	Connection type code [1]																						
		07						7							7R, 3P	33		3M	3T	78				
		Material code [2]																						
		1	4	5	20	71	75	1	4	5	20	N5	71	75	1	1	4	1	1	5	20	N5	71	75
10	12	X	X	-	-	X	X	-	-	-	-	-	-	-	-	-	-	-	-	-	-	-	-	-
	15	X	X	-	-	X	X	X	-	X	X	X	-	-	-	X	-	-	-	X	X	X	-	-
20	15	X	X	-	-	X	X	X	X	-	-	-	X	X	X	X	X	X	X	-	-	-	X	X
	20	X	X	-	-	X	X	X	X	-	-	-	X	X	X	X	X	X	X	-	-	-	X	X
	25	X	X	-	-	X	X	X	X	-	-	-	X	X	X	X	X	X	X	-	-	-	X	X
25	32	X	X	-	-	X	X	X	X	-	-	-	X	X	X	X	X	X	X	-	-	-	X	X
40	40	X	X	-	-	X	X	X	X	-	-	-	X	X	X	X	X	X	X	-	-	-	X	X
	50	X	X	-	-	X	X	X	X	-	-	-	X	X	X	X	X	X	X	-	-	-	X	X
50	65	X	X	X	X	-	-	-	-	-	-	-	-	-	-	-	-	-	-	-	-	-	-	-
80	80	X	X	-	-	-	-	-	-	-	-	-	-	-	-	-	-	-	-	-	-	-	-	-
100	100	X	X	-	-	-	-	-	-	-	-	-	-	-	-	-	-	-	-	-	-	-	-	-

MG = diaphragm size, X = standard

1) **Connection type**
Code 07: Spigot body with GEMÜ 1035 union end, DIN insert (socket)
Code 7: Union end with insert (socket) – DIN
Code 7R: Union end with insert (Rp threaded socket) – DIN
Code 33: Union end with inch insert – BS (socket)
Code 3M: Union end with inch insert – ASTM (socket)
Code 3P: Union end with NPT threaded socket insert
Code 3T: Union end with JIS insert (socket)
Code 78: Union end with insert (for IR butt welding) – DIN

2) **Valve body material**
Code 1: PVC-U, grey
Code 4: ABS
Code 5: PP, reinforced
Code 20: PVDF
Code 71: Inliner PP-H, grey, outliner PP, reinforced
Code 75: Inliner PVDF/outliner PP, reinforced
Code N5: PP-H, natural

Threaded socket

MG	DN	Connection type code 1 [1]
		Material code 1, 5, 20 [2]
10	12	X

MG = diaphragm size, X = standard

1) **Connection type**
Code 1: Threaded socket DIN ISO 228

2) **Valve body material**
Code 1: PVC-U, grey
Code 5: PP, reinforced
Code 20: PVDF

Solvent cement socket

MG	DN	Connection type code 2 [1]
		Material code 1 [2]
10	12	X

MG = diaphragm size, X = standard

1) **Connection type**
Code 2: Solvent cement socket DIN

2) **Valve body material**
Code 1: PVC-U, grey

Flange

MG	DN	Connection type code [1]									
		4					39				
		Material code [2]									
		1	5	20	71	75	1	5	20	71	75
20	15	X	-	-	X	X	X	-	-	X	X
	20	X	-	-	X	X	X	-	-	X	X
	25	X	-	-	X	X	X	-	-	X	X
25	32	X	-	-	X	X	X	-	-	X	X
40	40	X	-	-	X	X	X	-	-	X	X
	50	X	-	-	X	X	X	-	-	X	X
50	65	X	X	X	-	-	X	X	X	-	-

MG = diaphragm size, X = standard

1) **Connection type**
Code 4: Flange EN 1092, PN 10, form B, face-to-face dimension FTF EN 558 series 1, ISO 5752, basic series 1
Code 39: Flange ANSI Class 125/150 RF, face-to-face dimension FTF EN 558 series 1, ISO 5752, basic series 1, length only for body configuration D

2) **Valve body material**
Code 1: PVC-U, grey
Code 5: PP, reinforced
Code 20: PVDF
Code 71: Inliner PP-H, grey, outliner PP, reinforced
Code 75: Inliner PVDF/outliner PP, reinforced

Flare

MG	DN	Connection type code 75 [1]
		Material code N5 [2]
10	15	X
	20	X

MG = diaphragm size, X = standard

1) **Connection type**
Code 75: Flare connection with PVDF union nut

2) **Valve body material**
Code N5: PP-H, natural

Availability - Product conformity NSF (special function code N)

MG	DN	Connection type code [1]									Material code	Diaphragm material code
		0	4	7	7R	30	33	39	3M	3T	1	17
20	15	X	X	X	X	X	X	X	X	-	X	X
	20	X	X	X	X	X	X	X	X	X	X	X
	25	X	X	X	X	X	X	X	X	X	X	X
25	32	X	X	X	X	X	X	X	X	X	X	X
40	40	X	X	X	X	X	X	X	X	X	X	X
	50	X	X	X	X	X	X	X	X	X	X	X
50	65	X	X	-	-	X	-	X	-	-	X	X

MG = diaphragm size

1) **Connection type**
Code 0: Spigot DIN
Code 4: Flange EN 1092, PN 10, form B, face-to-face dimension FTF EN 558 series 1, ISO 5752, basic series 1
Code 7: Union end with insert (socket) – DIN
Code 30: Spigot – inch, for welding or solvent cementing, depending on the body material
Code 33: Union end with inch insert – BS (socket)
Code 39: Flange ANSI Class 125/150 RF, face-to-face dimension FTF EN 558 series 1, ISO 5752, basic series 1, length only for body configuration D
Code 3M: Union end with inch insert – ASTM (socket)
Code 3T: Union end with JIS insert (socket)
Code 7R: Union end with insert (Rp threaded socket) – DIN

Availability of product conformity – drinking water hygiene suitability according to system 1+ (special function 1)

MG	DN	Connection type code [1]						Material code	Diaphragm material code
		1	2	0	30	7	33	1	28
10	12	X	X	-	-	-	-	X	X
	15	-	-	-	-	X	X	X	X
20	15	-	-	X	X	X	X	X	X
	20	-	-	X	X	X	X	X	X
	25	-	-	X	X	X	X	X	X
25	32	-	-	X	X	X	X	X	X
40	40	-	-	X	X	X	X	X	X
	50	-	-	X	X	X	X	X	X
50	65	-	-	X	X	-	-	X	X

MG = diaphragm size

1) **Connection type**
Code 0: Spigot DIN
Code 1: Threaded socket DIN ISO 228
Code 2: Solvent cement socket DIN
Code 7: Union end with insert (socket) – DIN
Code 30: Spigot – inch, for welding or solvent cementing, depending on the body material
Code 33: Union end with inch insert – BS (socket)

Availability of mounting plate

MG	DN	Material code [1]
10	**12**	X
	15	X
	20	X

MG = diaphragm size, X = standard

1) **Valve body material**
Code 20: PVDF
Code N5: PP-H, natural

Availability of product compliance

	Diaphragm material code [1]	Body material code [2]
Foodstuffs		
FDA	17, 54, 5M	20, 71, 75

1) **Diaphragm material**
Code 17: EPDM
Code 54: PTFE/EPDM one-piece
Code 5M: PTFE/EPDM two-piece

2) **Valve body material**
Code 20: PVDF
Code 71: Inliner PP-H, grey, outliner PP, reinforced
Code 75: Inliner PVDF/outliner PP, reinforced

Order data

The order data provide an overview of standard configurations.

Please check the availability before ordering. Other configurations available on request.

Order codes

1 Type	Code
Diaphragm valve, motorized, electro-mechanical hollow shaft actuator, eSyDrive	R649

2 DN	Code
DN 12	12
DN 15	15
DN 20	20
DN 25	25
DN 32	32
DN 40	40
DN 50	50
DN 65	65

3 Body configuration	Code
2/2-way body	D

4 Connection type	Code
Spigot	
Spigot DIN	0
Spigot for IR butt welding	20
Spigot for IR butt welding, BCF	28
Spigot – inch, for welding or solvent cementing, depending on the body material	30
Body with threaded spigots for unions	7X
Union end	
Union end with insert (socket) – DIN	7
Spigot body with GEMÜ 1035 union end, DIN insert (socket)	07
Union end with insert (Rp threaded socket) – DIN	7R
Union end with inch insert – BS (socket)	33
Union end with inch insert – ASTM (socket)	3M
Union end with NPT threaded socket insert	3P
Union end with JIS insert (socket)	3T
Union end with insert (for IR butt welding) – DIN	78
Threaded socket	
Threaded socket DIN ISO 228	1
Solvent cement socket	
Solvent cement socket DIN	2
Flange	
Flange EN 1092, PN 10, form B, face-to-face dimension FTF EN 558 series 1, ISO 5752, basic series 1	4
Flange ANSI Class 125/150 RF, face-to-face dimension FTF EN 558 series 1, ISO 5752, basic series 1, length only for body configuration D	39

4 Connection type	Code
Flare	
Flare connection with PVDF union nut	75

5 Valve body material	Code
PVC-U, grey	1
ABS	4
PP, reinforced	5
PVDF	20
Inliner PP-H, grey, outliner PP, reinforced	71
Inliner PVDF/outliner PP, reinforced	75
PP-H, natural	N5

6 Diaphragm material	Code
Elastomer	
NBR	2
FKM	4
EPDM	17
EPDM	29
PTFE	
PTFE/EPDM one-piece	54
PTFE/EPDM two-piece	5M
Note: The PTFE/EPDM diaphragm (code 5M) is available from diaphragm size 25.	

7 Voltage/Frequency	Code
24 V DC	C1

8 Control module	Code
OPEN/CLOSE, positioner and process controller	L0

9 Actuator version	Code
Actuator size 0	0A
Actuator size 0, diaphragm size 20, with distance piece	E0
Actuator size 1	1A
Actuator size 2	2A

10 Mounting plate	Code
Including mounting plate	M
Without	

11 Special version	Code
NSF 61 water approval	N
Drinking water hygiene suitability according to system 1+, UBA-BWGL for plastics and other organic materials, Cold and hot water (23 °C–60 °C)	1

Order example

Ordering option	Code	Description
1 Type	R649	Diaphragm valve, motorized, electro-mechanical hollow shaft actuator, eSyDrive
2 DN	40	DN 40
3 Body configuration	D	2/2-way body
4 Connection type	0	Spigot DIN
5 Valve body material	1	PVC-U, grey
6 Diaphragm material	17	EPDM
7 Voltage/Frequency	C1	24 V DC
8 Control module	L0	OPEN/CLOSE, positioner and process controller
9 Actuator version	2A	Actuator size 2
10 Mounting plate		Without
11 Special version	N	NSF 61 water approval

Technical data

Medium

Working medium: Corrosive, inert, gaseous and liquid media which have no negative impact on the physical and chemical properties of the body and diaphragm material.

Temperature

Media temperature:

Valve body material	Media temperature
PVC-U, grey (code 1)	10 — 60 °C
ABS (code 4)	-10 — 60 °C
PP, reinforced (code 5)	5 – 80 °C
PVDF (code 20)	-10 — 80 °C
Inliner PP-H grey / outliner PP, reinforced (code 71)	5 – 80 °C
Inliner PVDF / outliner PP, reinforced (code 75)	-10 — 80 °C
PP-H, natural (code N5)	5 – 80 °C

Ambient temperature:

Valve body material	Ambient temperature
PVC-U, grey (code 1)	10 — 50 °C
ABS (code 4)	-10 — 50 °C
PP, reinforced (code 5)	5 — 50 °C
PVDF (code 20)	-10 — 50 °C
Inliner PP-H grey / outliner PP, reinforced (code 71)	5 — 50 °C
Inliner PVDF / outliner PP, reinforced (code 75)	-5 — 50 °C
PP-H, natural (code N5)	5 — 50 °C

Storage temperature: 0 — 40 °C

Pressure

Operating pressure:

MG	DN	Actuator version	Diaphragm materials	
			Elastomer	PTFE
10	**12 - 20**	**0A**	0 - 6	0 - 6
20	**15 - 25**	**E0**[1)]	0 - 6	0 - 5
		1A	0 - 10	0 - 10
25	**32**	**1A**	0 - 10	0 - 10
40	**40 - 50**	**1A**	0 - 5	0 - 2
		2A	0 - 10	0 - 10
50	**65**	**2A**	0 - 10	0 - 10

MG = diaphragm size
All pressures are gauge pressures. Operating pressure values were determined with static operating pressure applied on one side of a closed valve. Sealing at the valve seat and atmospheric sealing is ensured for the given values.
Information on operating pressures applied on both sides and for high purity media on request.

The operating pressures apply at room temperature. In case of deviating temperatures, observe the pressure / temperature correlation.

Pressure rating: PN 10

Leakage rate: Leakage rate A to P11/P12 EN 12266-1

Pressure/temperature correlation:

MG	Actuator version	Valve body material		Temperature in °C (valve body)										
		Materials	Code	-10	0	5	10	20	30	40	50	60	70	80
10, 20	**0C, 0E**	**PVC-U**	**1**	-	-	-	6.0	6.0	6.0	6.0	3.5	1.5	-	-
		PP-H	**5**	-	-	6.0	6.0	6.0	6.0	6.0	5.5	4.0	2.7	1.5
		PVDF	**20**	6.0	6.0	6.0	6.0	6.0	6.0	6.0	6.0	6.0	5.4	4.7
		PP-H-Natur	**N5**	-	-	6.0	6.0	6.0	6.0	6.0	5.5	4.0	2.7	1.5
		ABS	**4**	6.0	6.0	6.0	6.0	6.0	6.0	6.0	4.0	2.0	-	-
		PP-H	**71**	-	-	6.0	6.0	6.0	6.0	6.0	5.5	4.0	2.7	1.5
		PVDF	**75**	6.0	6.0	6.0	6.0	6.0	6.0	6.0	6.0	6.0	5.4	4.7
20, 25, 40, 50	**1A, 2A**	**PVC-U**	**1**	-	-	-	10.0	10.0	8.0	6.0	3.5	1.5	-	-
		ABS	**4**	10.0	10.0	10.0	10.0	10.0	8.0	6.0	4.0	2.0	-	-
		PP-H	**5**	-	-	10.0	10.0	10.0	8.5	7.0	5.5	4.0	2.7	1.5
		PP-H	**71**	-	-	10.0	10.0	10.0	8.5	7.0	5.5	4.0	2.7	1.5
		PVDF	**20**	10.0	10.0	10.0	10.0	10.0	9.0	8.0	7.1	6.3	5.4	4.7
		PVDF	**75**	10.0	10.0	10.0	10.0	10.0	9.0	8.0	7.1	6.3	5.4	4.7

MG = diaphragm size
Actuator version 0E with PTFE diaphragm can be used up to max. 5 bar. At temperatures above 30 °C the maximum operating pressure decreases.
Actuator version 1A in conjunction with diaphragm size MG 40 is limited to 5 bar operating pressure. In conjunction with a PTFE diaphragm to 2 bar. At temperatures above 30 °C the maximum operating pressure decreases.
The pressure rating (PN) depends on the diaphragm size.
Data for extended temperature ranges on request. Please note that the ambient temperature and media temperature generate a combined temperature at the valve body which must not exceed the above values.
Depending on the valve configuration, the maximum operating pressure of the pressure rating may be lower. Observe the operating pressure table.

Kv values:

MG	DN	Kv values
10	**12**	2.8
	15	3.5
	20	3.5
20	**15**	6.0
	20	10.0
	25	12.0
25	**32**	20.0
40	**40**	42.0
	50	46.0
50	**65**	70.0

MG = diaphragm size, Kv values in m³/h
Kv values determined acc.to DIN EN 60534 standard, inlet pressure 5 bar, Δp 1 bar, PVC-U valve body and soft elastomer diaphragm. The Kv values for other product configurations (e.g. other diaphragm or body materials) may differ. In general, all diaphragms are subject to the influences of pressure, temperature, the process and their tightening torques. Therefore the Kv values may exceed the tolerance limits of the standard.
The Kv value curve (Kv value dependent on valve stroke) can vary depending on the diaphragm material and term of use.

Product compliance

Machinery Directive: 2006/42/EC

Pressure Equipment Directive: 2014/68/EU

Food: Regulation (EC) No. 1935/2004*
Regulation (EC) No. 10/2011*
FDA*

EMC Directive: 2014/30/EU

Drinking water: NSF/ANSI*
* depending on version and/or operating parameters

Drinking water hygiene suitability according to system 1+ (special function 1)
UBA-BWGL for plastics and other organic materials,
Cold and hot water (23 °C–60 °C)
System 1+

RoHS Directive: 2011/65/EU

Materials

Materials:

Diaphragm material	O-ring material
PTFE	FKM
NBR	EPDM
FKM	FKM
EPDM	EPDM

Mechanical data

Protection class: IP 65 acc. to EN 60529

Actuating speed:

Actuator version 0A	adjustable, max. 6 mm/s
Actuator version E0	adjustable, max. 6 mm/s
Actuator version 1A	adjustable, max. 6 mm/s
Actuator version 2A	adjustable, max. 4 mm/s

Weight:

Actuator

Actuator version 0A	2.1 kg
Actuator version E0	2.2 kg
Actuator version 1A	3.0 kg
Actuator version 2A	9.0 kg

Valve body

MG	DN	Spigot			Union end				Flange	Threaded socket	Solvent cement socket	Flare
		Connection type code										
		0, 30	20	28	3P, 7, 7R	33	3M, 3T	78	4, 39	1	2	75
10	**12**	-	-	-	-	-	-	-	-	0.08	0.06	-
	15	-	-	0.13	0.18	0.13	-	0.20	-	-	-	0.08
	20	-	-	-	-	-	-	-	-	-	-	0.125
20	**15**	0.12	0.10	-	0.17	0.24	0.26	0.27	0.67	-	-	-
	20	0.13	0.12	-	0.21	0.28	0.30	0.36	0.84	-	-	-
20	**25**	0.16	0.14	-	0.26	0.33	0.38	0.37	1.28	-	-	-
25	**32**	0.22	0.18	-	0.40	0.70	0.73	0.63	1.89	-	-	-
40	**40**	0.50	0.40	-	0.73	0.83	0.93	1.13	2.36	-	-	-
	50	0.57	0.47	-	1.00	1.40	1.50	1.60	3.08	-	-	-
50	**65**	0.92	3.57	-	-	-	-	-	3.20	-	-	-

MG = diaphragm size
Weights in kg

Installation position: Optional

Flow direction: Optional

Actuator duty cycle and service life

Service life:

Control operation - Class C acc. to EN 15714-2 (1,800,000 start-ups and 1200 start-ups per hour).

Open / Close duty - Minimum 1,000,000 switching cycles at room temperature and permissible duty cycle.

Duty cycle:

Control operation - Class C acc. to EN 15714-2.

Open/Close duty - 100%

Electrical data

Supply voltage:

	Actuator size 0	Actuator size 1	Actuator size 2
Voltage	Uv = 24 V DC ± 10%		
Rating	Max. 28 W	Max. 65 W	Max. 100 W
Reverse battery protection	Yes		

Analogue input signals

Set value

Input signal: 0/4 - 20 mA; 0 – 10 V DC (selectable using software)

Input type: passive

Input resistance: 250 Ω

Accuracy/linearity: ≤ ±0.3% of full flow

Temperature drift: ≤ ±0.1% / 10°K

Resolution: 12 bit

Reverse battery protection: No

Overload proof: Yes (up to ± 24 V DC)

Process actual value

Input signal: 0/4 - 20 mA; 0 – 10 V DC (selectable using software)

Input type: passive

Input resistance: 250 Ω

Accuracy/linearity: ≤ ±0.3% of full flow

Temperature drift: ≤ ±0.1% / 10°K

Resolution: 12 bit

Reverse battery protection: No

Overload proof: Yes (up to ± 24 V DC)

Digital input signals

Digital inputs:	3
Function:	Can be selected using software
Voltage:	24 V DC
Logic level "1":	>14 V DC
Logic level "0":	< 8 V DC
Input current:	typ. 2.5 mA (at 24 V DC)

Analogue output signals

Actual value

Output signal:	0/4 - 20 mA; 0 – 10 V DC (selectable using software)
Output type:	Active (AD5412)
Accuracy:	≤ ±1% of full flow
Temperature drift:	≤ ±0.1% / 10°K
Load resistor:	≤ 750 kΩ
Resolution:	10 bit
Overload proof:	Yes (up to ± 24 V DC)
Short-circuit proof:	Yes

Digital output signals

Switching outputs 1 and 2

Design:	2x make contact, potential-free
Switching voltage:	max. 48 V DC / 48 V AC
Switch rating:	max. 60 W / 2A
Switch points:	Adjustable 0 - 100 %

Switching output 3

Function:	Signal fault
Type of contact:	Push-Pull
Switching voltage:	Supply voltage
Switching current:	≤ 0.1 A
Drop voltage:	Max. 2.5 V DC at 0.1 A
Overload proof:	Yes (up to ± 24 V DC)
Short-circuit proof:	Yes
Pull-Down resistance:	120 kΩ

Communication eSy-Web

Interface: Ethernet

Function: Parameterisation via web browser

IP address: 192.168.2.1 alterable via web browser

Subnet screen: 255.255.252.0 alterable via web browser

The actuator and the PC must be in the same network to use the web server. The IP address of the actuator is entered in the web browser and the actuator can then be parametrised. In order to use more than one actuator, a definitive IP address must be assigned to each actuator in the same network.

Communication Modus TCP

Interface: Modbus TCP

IP address: 192.168.2.1 alterable via web browser

Subnet screen: 255.255.252.0 alterable via web browser

Port: 502

Supported function codes:

Code Dezimal	Code Hex	Function
3	0x03	Read Holding Registers
4	0x04	Read Input Registers
6	0x06	Write Single Register
16	0x10	Write Multiple Registers
23	0x17	Read / Write Multiple Registers

Behaviour in the event of an error

Function: In the event of an error the valve moves to the error position.

Notes: Moving to the error position is only possible with full power supply. This behaviour is not a safety position. The valve must be operated with a GEMÜ 1571 emergency power supply module (see accessories) to ensure the function in case of voltage loss.

Error position: Closed, open or hold (adjustable via eSy-web web interface).

Electrical connection

Connection X1

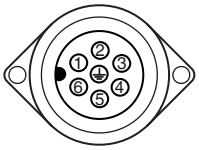

7-pin plug, Binder, type 693

Pin	Signal name
Pin 1	Uv, 24 V DC supply voltage
Pin 2	Uv GND
Pin 3	Relay output K1, common
Pin 4	Relay output K1, make contact
Pin 5	Relay output K2, common
Pin 6	Relay output K2, make contact
Pin PE	Function earth

Connection X2

5-pin M12 built-in socket, D-coded

Pin	Signal name
Pin 1	Tx + (Ethernet)
Pin 2	Rx + (Ethernet)
Pin 3	Tx - (Ethernet)
Pin 4	Rx - (Ethernet)
Pin 5	Shield

Connection X3

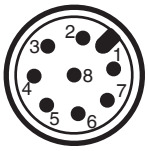

8-pin M12 plug, A-coded

Pin	Signal name
Pin 1	W+ set value input
Pin 2	W – set value input
Pin 3	X + actual value output
Pin 4	GND (actual value output, digital input 1 – 3, error message output)
Pin 5	Error message output 24 V DC
Pin 6	Digital input 3
Pin 7	Digital input 1
Pin 8	Digital input 2

Connection X4

4-pin M12 built-in socket, A-coded

Pin	Signal name
Pin 1	UV, 24 V DC actual value supply
Pin 2	n.c.
Pin 3	GND (actual value supply, actual value input)
Pin 4	X+, process actual value input
Pin 5	n.c.

Connection diagram

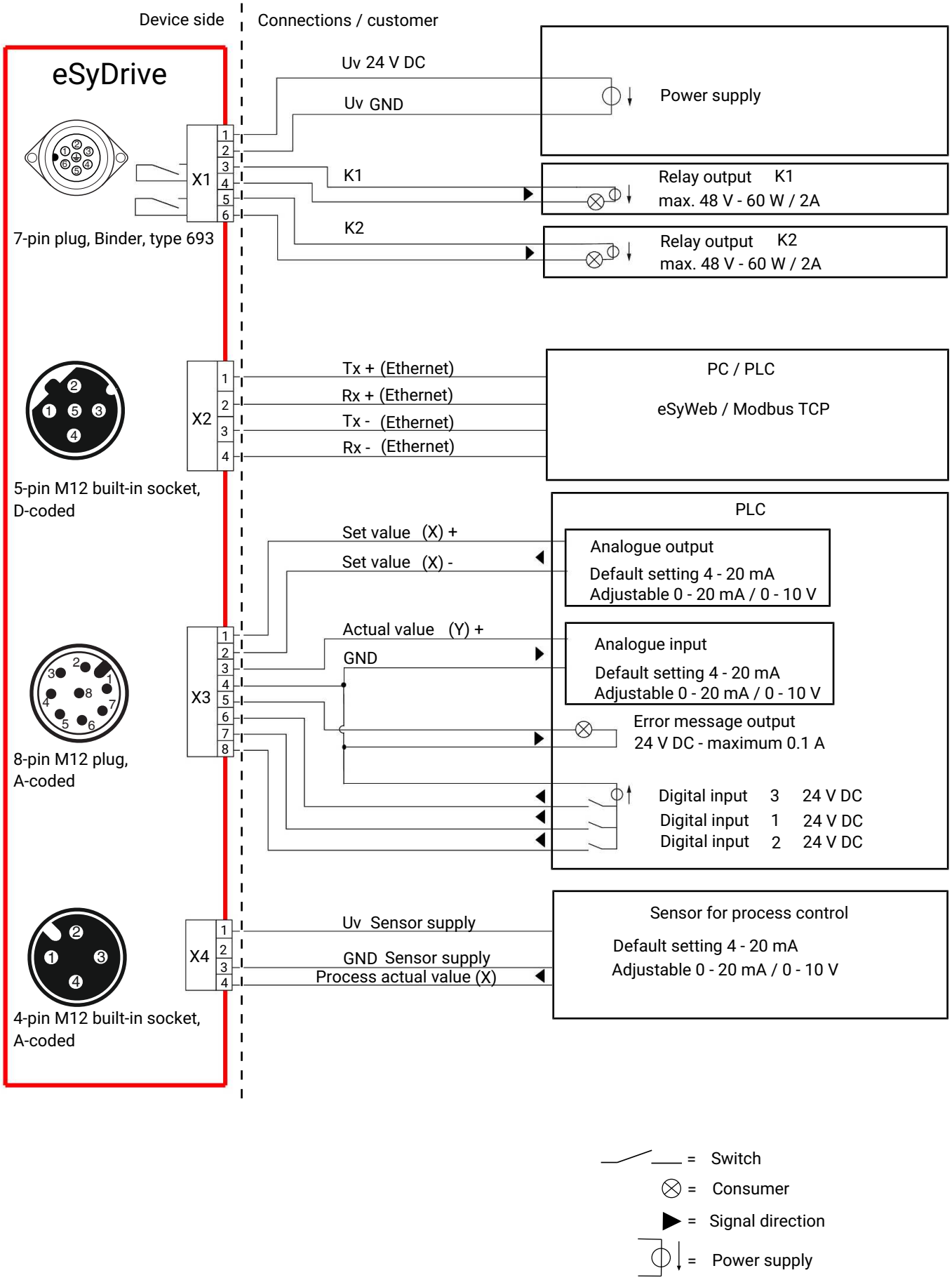

Dimensions

Actuator dimensions

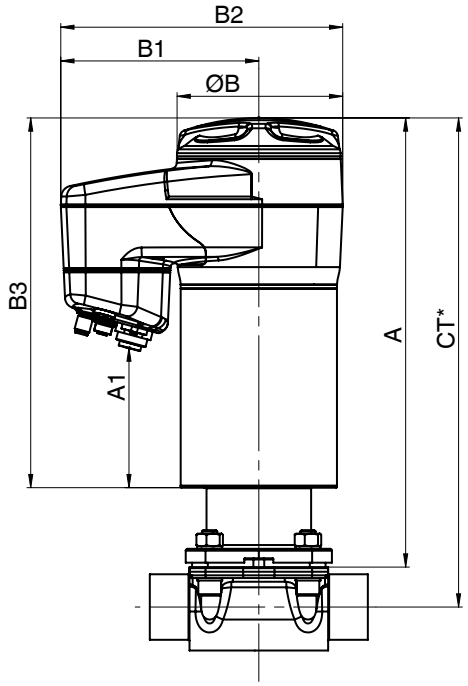

MG	DN	Actuator version	A	A1	Ø B	B1	B2	B3
10	**10 - 20**	**0A**	230.0	44.0	68.0	126.0	160.0	190.0
20	**15 - 25**	**E0**	237.0	44.0	68.0	126.0	160.0	190.0
		1A	299.0	83.0	82.0	132.0	172.0	250.0
25	**32**	**1A**	305.0	83.0	82.0	132.0	172.0	250.0
40	**40, 50**	**1A**	303.0	75.0	82.0	132.0	172.0	243.0
		2A	360.0	111.0	134.0	157.0	224.0	296.0
50	**65**	**2A**	360.0	111.0	134.0	157.0	224.0	296.0

Dimensions in mm, MG = diaphragm size
* CT = A + H1 (see body dimensions)

Body dimensions

Spigot DIN/inch (code 0, 30)

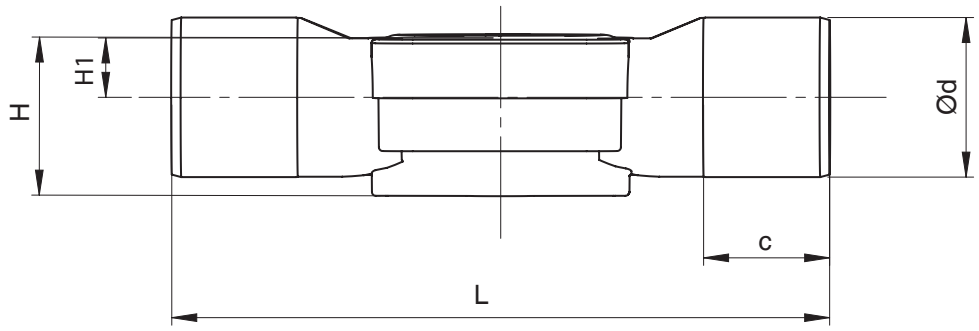

Connection type spigot DIN (code 0) [1], body material PVC-U (code 1), PP (code 5), PVDF (code 20), inliner/outliner (code 71, 75) [2]

MG	DN	NPS	c			ød	H			H1	L
			Material				Material				
			1	5, 20	71, 75		1	5, 20	71, 75		
20	**15**	**1/2"**	16.0	-	18.0	20.0	36.0	-	36.0	10.0	124.0
	20	**3/4"**	19.0	-	19.0	25.0	38.0	-	38.0	12.0	144.0
	25	**1"**	22.0	-	22.0	32.0	39.0	-	39.0	13.0	154.0
25	**32**	**1¼"**	32.0	-	32.0	40.0	41.0	-	41.0	15.0	174.0
40	**40**	**1½"**	35.0	-	26.0	50.0	63.2	-	63.2	23.2	194.0
	50	**2"**	38.0	-	33.0	63.0	63.2	-	63.2	23.2	224.0
50	**65**	**2½"**	46.0	46.0	-	75.0	78.8	78.8	-	38.8	284.0

Connection type spigot - inch (code 30) [1], body material PVC-U (code 1), ABS (code 4) [2]

MG	DN	NPS	c	ød	H	H1	L
20	**15**	**1/2"**	24.0	21.4	36.0	10.0	141.0
	20	**3/4"**	27.0	26.7	38.0	12.0	144.0
	25	**1"**	30.0	33.6	39.0	13.0	154.0
25	**32**	**1¼"**	33.0	42.2	41.0	15.0	174.0
40	**40**	**1½"**	35.0	48.3	63.2	23.2	194.0
	50	**2"**	40.0	60.3	63.2	23.2	224.0
50	**65**	**2½"**	46.0	73.0	78.8	38.8	284.0

Dimensions in mm
MG = diaphragm size

1) **Connection type**
Code 0: Spigot DIN
Code 30: Spigot – inch, for welding or solvent cementing, depending on the body material

2) **Valve body material**
Code 1: PVC-U, grey
Code 4: ABS
Code 5: PP, reinforced
Code 20: PVDF
Code 71: Inliner PP-H, grey, outliner PP, reinforced
Code 75: Inliner PVDF/outliner PP, reinforced

Spigot IR (code 20)

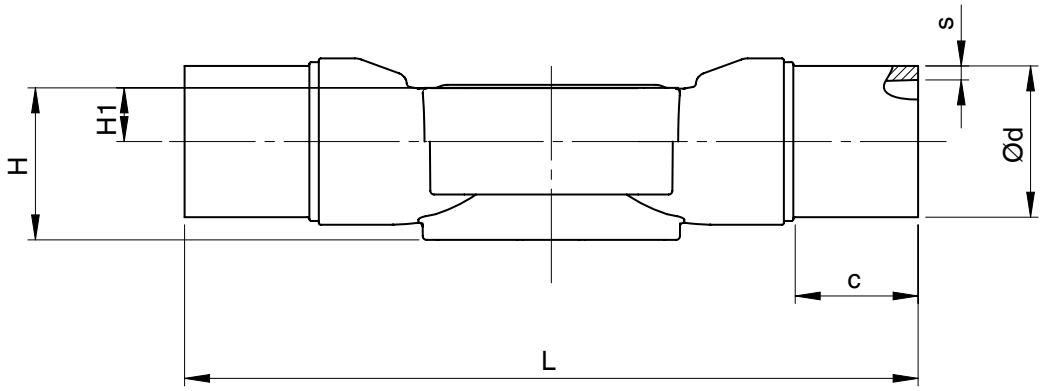

Connection type spigot IR (code 20) [1], body material inliner/outliner (code 71, 75) [2]

MG	DN	NPS	c	ød	H	H1	L	s	
								Material	
								71	75
20	**15**	**1/2"**	33.0	20.0	36.0	10.0	154.0	1.9	1.9
	20	**3/4"**	33.0	25.0	38.0	12.0	154.0	2.3	1.9
	25	**1"**	33.0	32.0	39.0	13.0	154.0	2.9	2.4
25	**32**	**1¼"**	33.0	40.0	41.0	15.0	194.0	3.7	2.4
40	**40**	**1½"**	33.0	50.0	63.2	23.2	194.0	4.6	3.0
	50	**2"**	33.0	63.0	63.2	23.2	224.0	5.8	3.0

Connection type spigot IR (code 20) [1], body material PVDF (code 20) [2]

MG	DN	NPS	c	ød	H	H1	L	s
50	**65**	**2½"**	43.0	75.0	78.8	38.8	284.0	3.6

Dimensions in mm
MG = diaphragm size

1) **Connection type**
Code 20: Spigot for IR butt welding

2) **Valve body material**
Code 20: PVDF
Code 71: Inliner PP-H, grey, outliner PP, reinforced
Code 75: Inliner PVDF/outliner PP, reinforced

Spigot (code 28)

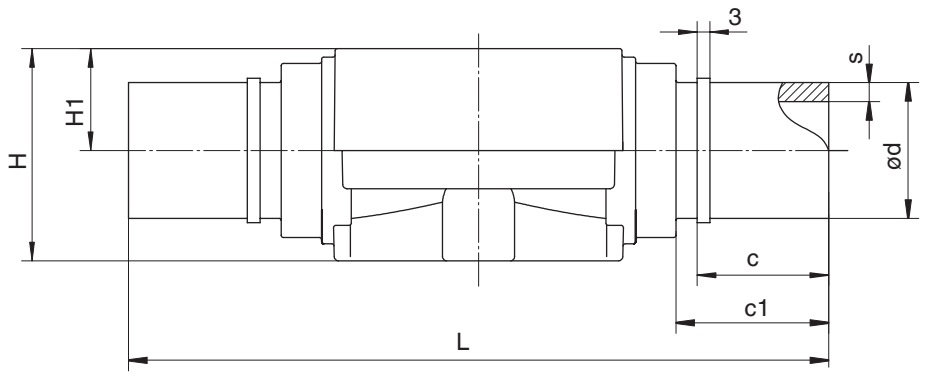

Connection type spigot (code 28) [1], body material PVDF (code 20) [2]

MG	DN	NPS	c	c1	ød	H	H1	L	s
10	**15**	**1/2"**	31.0	37.0	20.0	41.0	16.0	134.0	1.9

Dimensions in mm
MG = diaphragm size

1) **Connection type**
Code 28: Spigot for IR butt welding, BCF

2) **Valve body material**
Code 20: PVDF

Union end DIN (code 7)

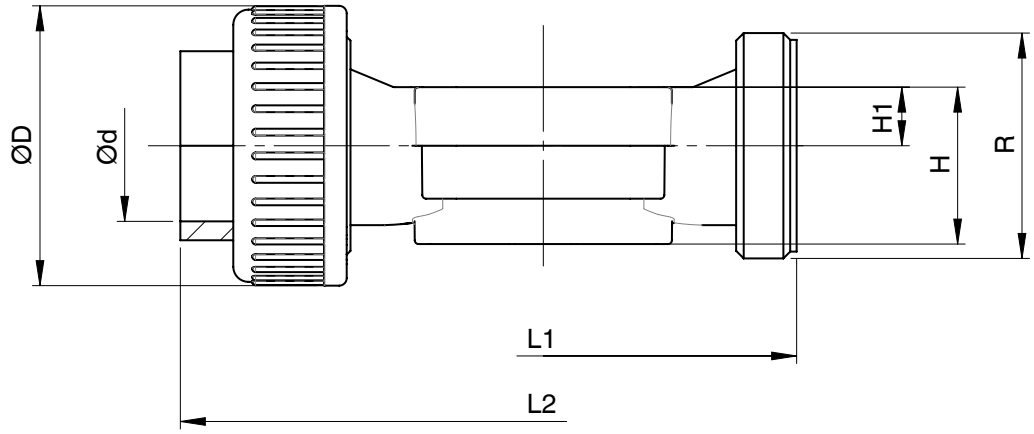

Connection type union end DIN (code 7) [1], body material PVC-U (code 1), PP (code 5), PVDF (code 20), PP-H (code N5) [2], diaphragm size 10

MG	DN	NPS	ød	øD	H		H1		L1	L2		R
					Material		Material			Material		
					1, 20	5, N5	1, 20	5, N5		1, 20	5, N5	
10	**15**	**1/2"**	20.0	43.0	30.0	41.0	15.0	16.0	90.0	128.0	125.0	G 1

Connection type union end DIN (code 7) [1], body material PVC-U (code 1), ABS (code 4), inliner/outliner (code 71, 75) [2], diaphragm size 20 – 40

MG	DN	NPS	ød	øD	H	H1	L1	L2				R
								Material				
								1	4	71	75	
20	**15**	**1/2"**	20.0	43.0	36.0	10.0	108.0	146.0	150.0	143.0	146.0	G 1
	20	**3/4"**	25.0	53.0	38.0	12.0	108.0	152.0	156.0	146.0	150.0	G 1¼
	25	**1"**	32.0	60.0	39.0	13.0	116.0	166.0	170.0	158.0	162.0	G 1½
25	**32**	**1¼"**	40.0	74.0	41.0	15.0	134.0	192.0	196.0	181.0	184.0	G 2
40	**40**	**1½"**	50.0	83.0	63.2	23.2	154.0	222.0	222.0	207.0	210.0	G 2¼
	50	**2"**	63.0	103.0	63.2	23.2	184.0	266.0	266.0	245.0	248.0	G 2¾

Dimensions in mm
MG = diaphragm size

1) **Connection type**
   Code 7: Union end with insert (socket) – DIN

2) **Valve body material**
   Code 1: PVC-U, grey
   Code 4: ABS
   Code 5: PP, reinforced
   Code 20: PVDF
   Code 71: Inliner PP-H, grey, outliner PP, reinforced
   Code 75: Inliner PVDF/outliner PP, reinforced
   Code N5: PP-H, natural

Union end inch (code 33, 3M, 3T)

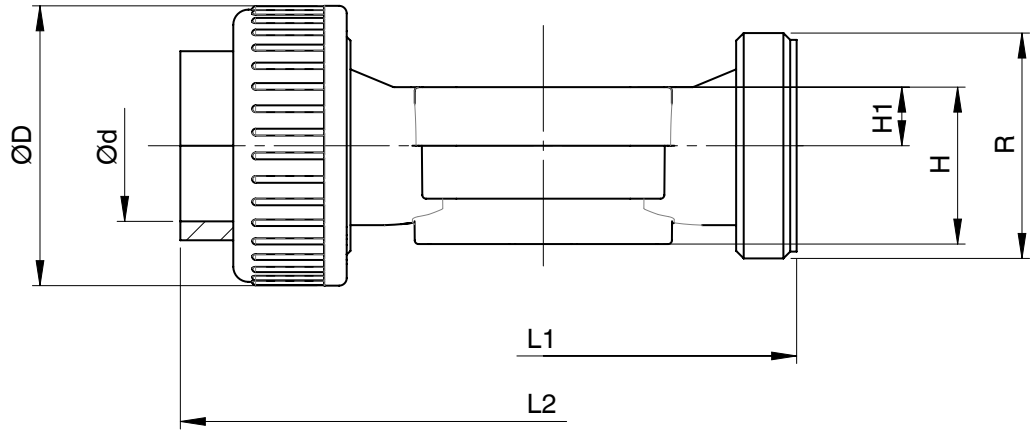

Connection type union end inch (code 33) [1], body material PVC-U (code 1) [2], diaphragm size 10

MG	DN	NPS	ød	øD	H	H1	L1	L2	R
10	**15**	**1/2"**	21.4	43.0	30.0	15.0	90.0	128.0	G1

Connection type union end inch (code 33, 3M, 3T) [1], body material PVC-U (code 1) [2], diaphragm sizes 20 - 40

MG	DN	NPS	ød			øD		H	H1	L1	L2			R	
			Connection type								Connection type				
			33	3M	3T	33, 3M	3T				33	3M	3T	33, 3M	3T
20	**15**	**1/2"**	21.4	21.4	22.0	43.0	53.0 *	36.0	10.0	108.0	146.0	158.0	152.0	G 1	G 1¼ *
	20	**3/4"**	26.8	26.7	26.0	53.0	53.0	38.0	12.0	108.0	152.0	164.0	152.0	G 1¼	G 1¼
	25	**1"**	33.6	33.5	32.0	60.0	60.0	39.0	13.0	116.0	166.0	180.0	166.0	G 1½	G 1½
25	**32**	**1¼"**	42.3	42.2	38.0	74.0	74.0	41.0	15.0	134.0	192.0	204.0	192.0	G 2	G 2
40	**40**	**1½"**	48.3	48.3	48.0	83.0	83.0	63.2	23.2	154.0	222.0	230.0	222.0	G 2¼	G 2¼
	50	**2"**	60.4	60.4	60.0	103.0	103.0	63.2	23.2	184.0	264.0	266.0	266.0	G 2¾	G 2¾

Connection type BS (code 33) [1], body material ABS (code 4) [2]

MG	DN	NPS	ød	øD	H	H1	L1	L2	R
20	**15**	**1/2"**	21.4	43.0	36.0	10.0	108.0	150.0	G 1
	20	**3/4"**	26.8	53.0	38.0	12.0	108.0	156.0	G 1¼
	25	**1"**	33.6	60.0	39.0	13.0	116.0	170.0	G 1½
25	**32**	**1¼"**	42.3	74.0	41.0	15.0	134.0	198.0	G 2
40	**40**	**1½"**	48.3	83.0	63.2	23.2	154.0	220.0	G 2¼
	50	**2"**	60.4	103.0	63.2	23.2	184.0	264.0	G 2¾

Dimensions in mm
MG = diaphragm size

* Insert requires valve body DN 20

1) **Connection type**
   Code 33: Union end with inch insert – BS (socket)
   Code 3M: Union end with inch insert – ASTM (socket)
   Code 3T: Union end with JIS insert (socket)

2) **Valve body material**
   Code 1: PVC-U, grey
   Code 4: ABS

Union end DIN, IR butt welding (code 78)

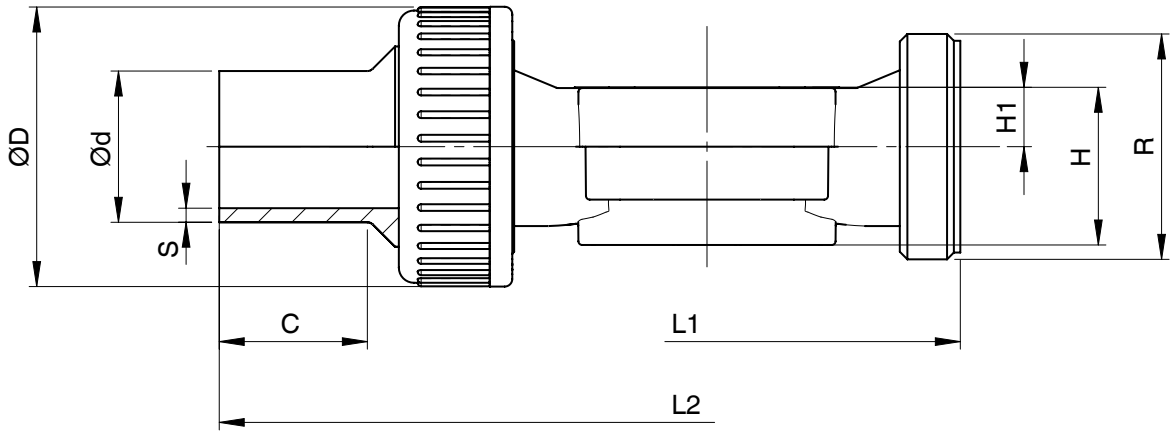

Connection type union end DIN, IR butt welding (code 78) [1], body materials PP (code 5), PVDF (code 20), PP-H (code N5) [2]

MG	DN	NPS	c	ød	øD	H		H1		L1	L2	R	s
						Material		Material					
						5	20, N5	5	20, N5				
10	**15**	**1/2"**	36.0	20.0	42.0	30.0	41.0	15.0	16.0	90.0	196.0	G 1	1.9

Connection type union end DIN, IR butt welding (code 78) [1], body material inliner/outliner (code 71, 75) [2]

MG	DN	NPS	c	ød	øD	H	H1	L1	L2	R	s	
											Material	
											71	75
20	**15**	**1/2"**	36.0	20.0	43.0	36.0	10.0	108.0	214.0	G 1	1.9	1.9
	20	**3/4"**	37.0	25.0	53.0	38.0	12.0	108.0	220.0	G 1¼	2.3	1.9
	25	**1"**	39.0	32.0	60.0	39.0	13.0	116.0	234.0	G 1½	2.9	2.4
25	**32**	**1¼"**	39.0	40.0	74.0	41.0	15.0	134.0	258.0	G 2	3.7	2.4
40	**40**	**1½"**	43.0	50.0	83.0	63.2	23.2	154.0	284.0	G 2¼	4.6	3.0
	50	**2"**	43.0	63.0	103.0	63.2	23.2	184.0	320.0	G 2¾	5.8	3.0

Dimensions in mm
MG = diaphragm size

1) **Connection type**
Code 78: Union end with insert (for IR butt welding) – DIN

2) **Valve body material**
Code 5: PP, reinforced
Code 20: PVDF
Code 71: Inliner PP-H, grey, outliner PP, reinforced
Code 75: Inliner PVDF/outliner PP, reinforced
Code N5: PP-H, natural

Union end Rp (code 7R), NPT (code 3P)

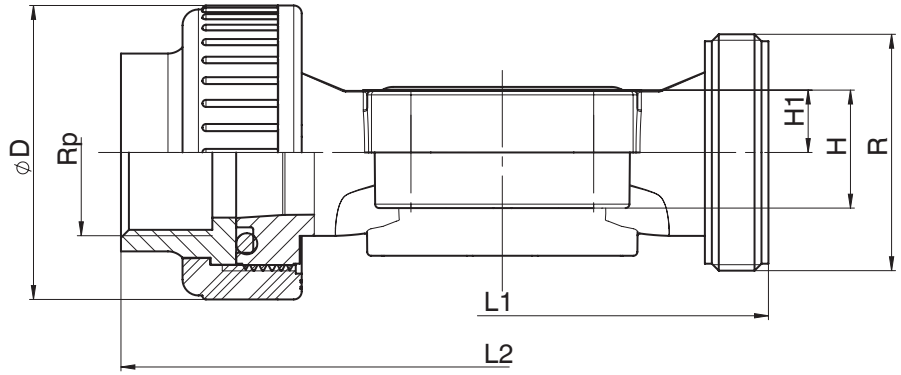

Connection type union end Rp (code 7R), NPT (code 3P) [1], **body material PVC-U (code 1)** [2]

MG	DN	NPS	øD	H	H1	L1	L2	R	Rp/NPT
20	**15**	**1/2"**	43.0	36.0	10.0	108.0	146.0	G 1	1/2
	20	**3/4"**	53.0	38.0	12.0	108.0	152.0	G 1¼	3/4
	25	**1"**	60.0	39.0	13.0	116.0	166.0	G 1½	1
25	**32**	**1¼"**	74.0	41.0	15.0	134.0	192.0	G 2	1¼
40	**40**	**1½"**	83.0	63.2	23.2	154.0	222.0	G 2¼	1½
	50	**2"**	103.0	63.2	23.2	184.0	266.0	G 2¾	2

Dimensions in mm
MG = diaphragm size

1) **Connection type**
Code 7R: Union end with insert (Rp threaded socket) – DIN
Code 3P: Union end with NPT threaded socket insert

2) **Valve body material**
Code 1: PVC-U, grey

Threaded socket (code 1)

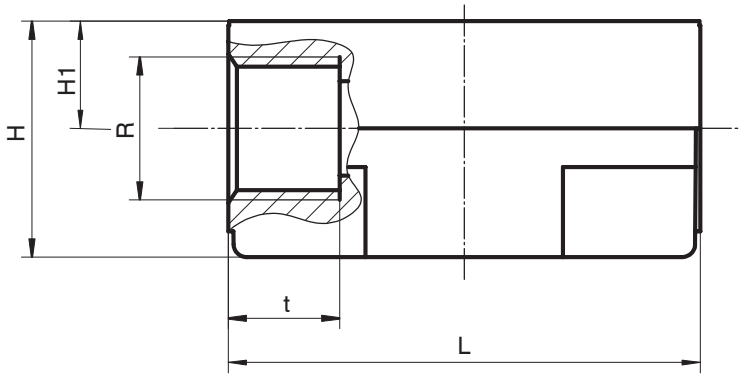

Connection type threaded socket (code 1) [1], body materials PVC-U (code 1), PP (code 5), PVDF (code 20) [2]

MG	DN	NPS	H		H1	L	R	t
			Material					
			1, 5	20				
10	**12**	**3/8"**	27.5	31.5	12.5	55.0	G3/8	13.0

Dimensions in mm
MG = diaphragm size

1) **Connection type**
Code 1: Threaded socket DIN ISO 228

2) **Valve body material**
Code 1: PVC-U, grey
Code 5: PP, reinforced
Code 20: PVDF

Solvent cement socket (code 2)

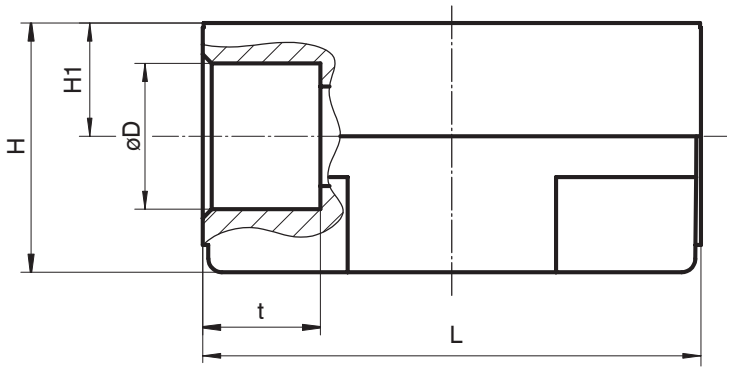

Connection type solvent cement socket (code 2) [1], body material PVC-U (code 1) [2]

MG	DN	NPS	ø D	H	H1	L	t
10	**12**	**3/8"**	16.0	27.5	12.5	55.0	13.0

Dimensions in mm
MG = diaphragm size

1) **Connection type**
Code 2: Solvent cement socket DIN

2) **Valve body material**
Code 1: PVC-U, grey

Flange EN (code 4)

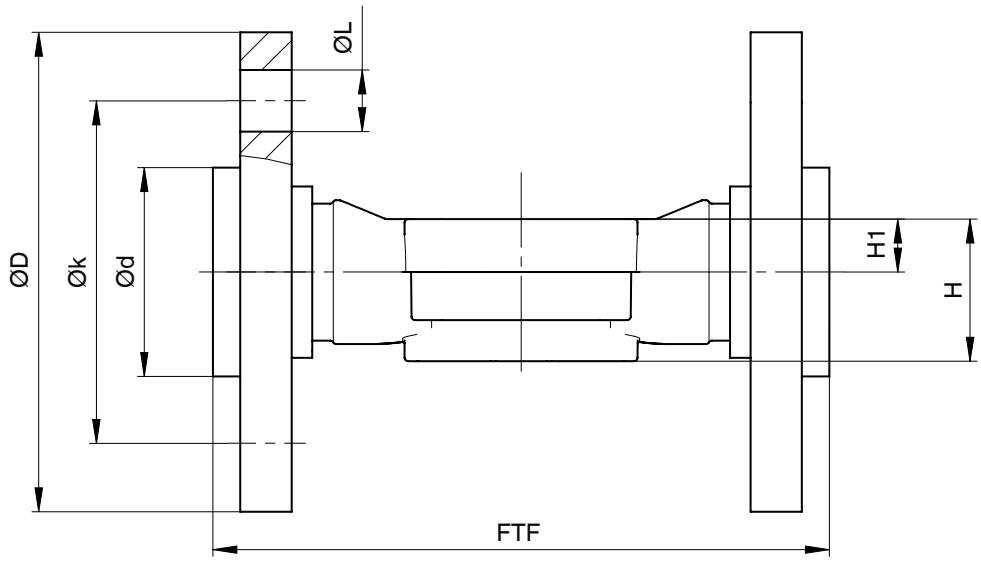

Connection type flange EN (code 4) [1], body material PVC-U (code 1) [2]

MG	DN	NPS	ød	øD	FTF	H	H1	øk	øL	n
20	**15**	**1/2"**	34.0	95.0	130.0	36.0	10.0	65.0	14.0	4
	20	**3/4"**	41.0	105.0	150.0	38.0	12.0	75.0	14.0	4
	25	**1"**	50.0	115.0	160.0	39.0	13.0	85.0	14.0	4
25	**32**	**1¼"**	61.0	140.0	180.0	41.0	15.0	100.0	18.0	4
40	**40**	**1½"**	73.0	150.0	200.0	63.2	23.2	110.0	18.0	4
	50	**2"**	90.0	165.0	230.0	63.2	23.2	125.0	18.0	4
50	**65**	**2½"**	106.0	185.0	290.0	78.8	38.8	145.0	18.0	4

Connection type flange EN (code 4) [1], body materials PP (code 5), PVDF (code 20) [2]

MG	DN	NPS	ød		øD	FTF	H	H1	øk	øL	n
			Material								
			5	20							
50	**65**	**2½"**	122.0	120.0	185.0	290.0	78.8	38.8	145.0	18.0	4

Dimensions in mm
MG = diaphragm size
n = number of bolts

1) **Connection type**
Code 4: Flange EN 1092, PN 10, form B, face-to-face dimension FTF EN 558 series 1, ISO 5752, basic series 1

2) **Valve body material**
Code 1: PVC-U, grey
Code 5: PP, reinforced
Code 20: PVDF

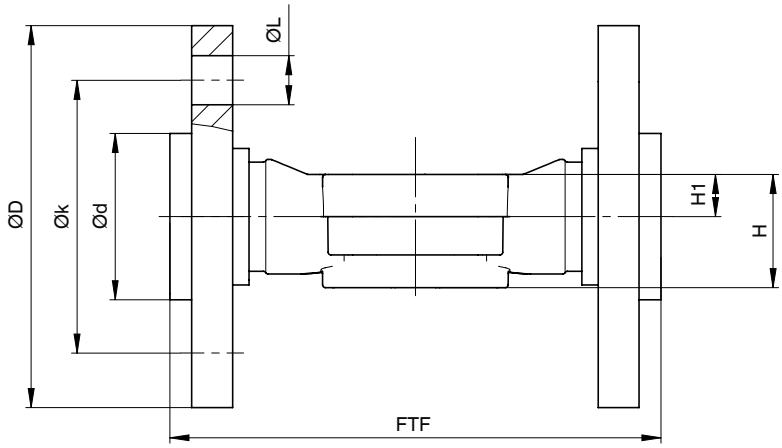

Connection type flange EN (code 4) [1], body material inliner/outliner (code 71, 75) [2]

MG	DN	NPS	ød	øD	FTF	H	H1	øk	øL	n
20	**15**	**1/2"**	45.0	95.0	130.0	36.0	10.0	65.0	14.0	4
	20	**3/4"**	58.0	105.0	150.0	38.0	12.0	75.0	14.0	4
	25	**1"**	68.0	115.0	160.0	39.0	13.0	85.0	14.0	4
25	**32**	**1¼"**	78.0	140.0	180.0	41.0	15.0	100.0	18.0	4
40	**40**	**1½"**	88.0	150.0	200.0	63.2	23.2	110.0	18.0	4
	50	**2"**	102.0	165.0	230.0	63.2	23.2	125.0	18.0	4

Dimensions in mm
MG = diaphragm size
n = number of bolts

1) **Connection type**
Code 4: Flange EN 1092, PN 10, form B, face-to-face dimension FTF EN 558 series 1, ISO 5752, basic series 1

2) **Valve body material**
Code 71: Inliner PP-H, grey, outliner PP, reinforced
Code 75: Inliner PVDF/outliner PP, reinforced

Flange ANSI (code 39)

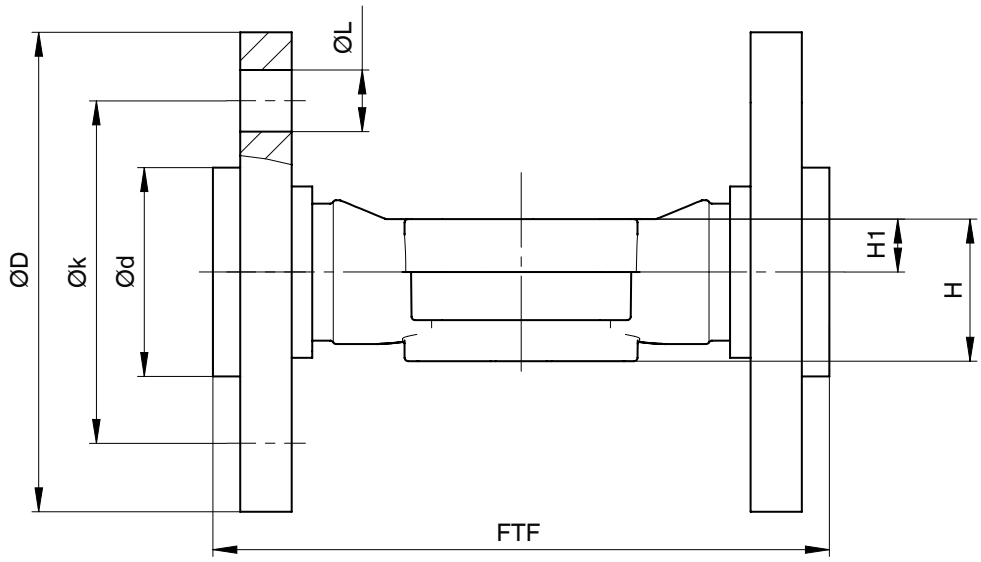

Connection type flange ANSI (code 39) [1], body material PVC-U (code 1) [2]

MG	DN	NPS	ød	øD	FTF	H	H1	øk	øL	n
20	**15**	**1/2"**	34.0	95.0	130.0	36.0	10.0	60.0	16.0	4
	20	**3/4"**	41.0	105.0	150.0	38.0	12.0	70.0	16.0	4
	25	**1"**	50.0	115.0	160.0	39.0	13.0	79.0	16.0	4
25	**32**	**1¼"**	61.0	140.0	180.0	41.0	15.0	89.0	16.0	4
40	**40**	**1½"**	73.0	150.0	200.0	63.2	23.2	98.0	16.0	4
	50	**2"**	90.0	165.0	230.0	63.2	23.2	121.0	19.0	4
50	**65**	**2½"**	106.0	185.0	290.0	78.8	38.8	140.0	19.0	4

Connection type flange ANSI (code 39) [1], body material PP (code 5), PVDF (code 20) [2]

MG	DN	NPS	ød		øD	FTF	H	H1	øk	øL	n
			Material								
			5	20							
50	**65**	**2½"**	122.0	120.0	185.0	290.0	78.8	38.8	140.0	19.0	4

Dimensions in mm
MG = diaphragm size
n = number of bolts

1) **Connection type**
Code 39: Flange ANSI Class 125/150 RF, face-to-face dimension FTF EN 558 series 1, ISO 5752, basic series 1, length only for body configuration D

2) **Valve body material**
Code 1: PVC-U, grey
Code 5: PP, reinforced
Code 20: PVDF

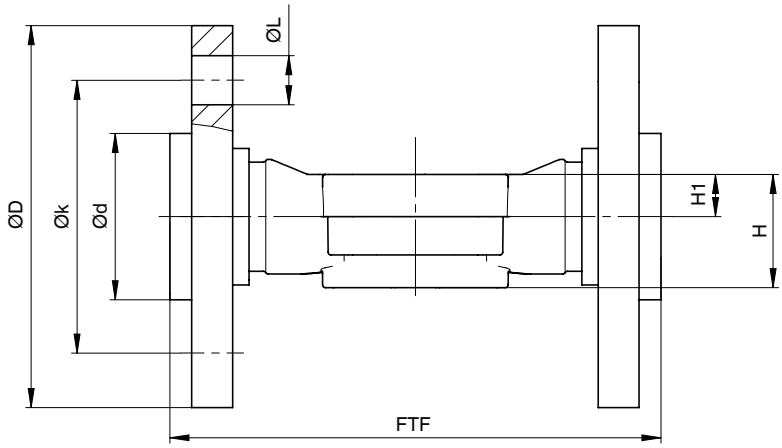

Connection type flange ANSI (code 39) [1], inliner/outliner body material (code 71, 75) [2]

MG	DN	NPS	ød	øD	FTF	H	H1	øk	øL	n
20	**15**	**1/2"**	45.0	95.0	130.0	36.0	10.0	60.0	16.0	4
	20	**3/4"**	54.0	105.0	150.0	38.0	12.0	70.0	16.0	4
	25	**1"**	63.0	115.0	160.0	39.0	13.0	79.0	16.0	4
25	**32**	**1¼"**	73.0	140.0	180.0	41.0	15.0	89.0	16.0	4
40	**40**	**1½"**	82.0	150.0	200.0	63.2	23.2	98.0	16.0	4
	50	**2"**	102.0	165.0	230.0	63.2	23.2	121.0	19.0	4

Dimensions in mm
MG = diaphragm size
n = number of bolts

1) **Connection type**
Code 39: Flange ANSI Class 125/150 RF, face-to-face dimension FTF EN 558 series 1, ISO 5752, basic series 1, length only for body configuration D

2) **Valve body material**
Code 71: Inliner PP-H, grey, outliner PP, reinforced
Code 75: Inliner PVDF/outliner PP, reinforced

Flare (code 75)

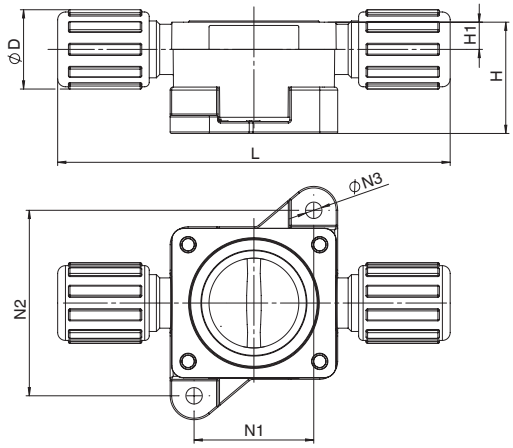

Connection type flare (code 75) [1], body material PP-H (code N5) [2]

MG	DN	NPS	øD	H	H1	L	N1	N2	øN3
10	**15**	**1/2"**	26.5	38.1	10.0	132.0	40.0	62.0	5.5
	20	**3/4"**	26.5	44.5	15.0	134.0	40.0	62.0	5.5

Dimensions in mm
MG = diaphragm size

1) **Connection type**
Code 75: Flare connection with PVDF union nut

2) **Valve body material**
Code N5: PP-H, natural

Valve body mounting

MG 10

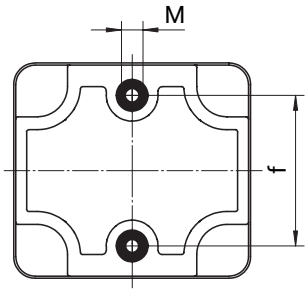

MG 20, MG 25, MG 40, MG 50

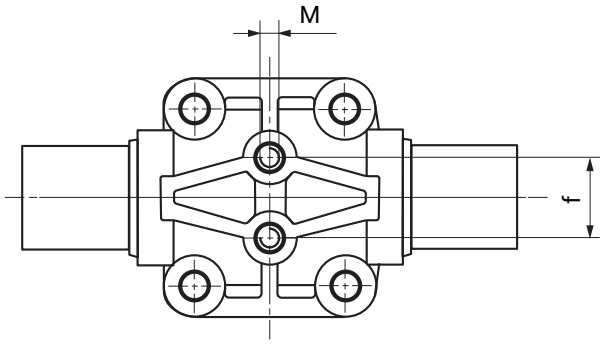

MG	DN	NPS	f	M	
				Anschlussart	
				0, 4, 7, 7R, 20, 28, 33, 39, 3M, 3T, 78	30
10	**12 - 20**	**1/4" – 1/2"**	35.0	M5	M5 *
20	**15 – 25**	**1/2" – 1"**	25.0	M6	M6 *
25	**32**	**1¼"**	25.0	M6	M6 *
40	**40 - 50**	**1½" – 2"**	44.5	M8	M8 *
50	**65**	**2½"**	44.5	M8	M8 *

* Inch thread on request
Dimensions in mm

Availability of mounting plate

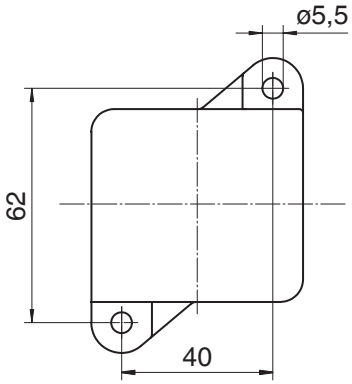

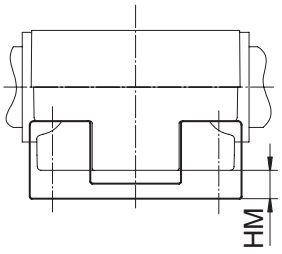

MG	DN	HM
10	**12**	5.0
	15	4.5
	20	4.5

Dimensions in mm

Error messages

Accessories

GEMÜ 1218

Connector

GEMÜ 1218 is a connector (cable socket/cable plug), 7-pin. Straight or 90° angled plug type.

GEMÜ 1218 Binder connector			
Connection X1 – supply voltage, relay outputs			
Binder plug	468/eSy series mating connector	Terminal compartment/ screws, 7-pin	88220649 [1)]
		Terminal compartment/ screws, 7-pin, 90°	88377714
		Terminal compartment/ screws, 7-pin, 90°, fitted with a 2 metre cable set	88770522

1) provided in the scope of delivery

GEMÜ 1219

Cable socket / cable plug M12

The GEMÜ 1219 is a connector (cable socket / cable plug) M12, 5-pin. Straight and/or 90° angled plug type. Defined cable length or with threaded connection without cable. Various materials available for the threaded ring.

GEMÜ 1219 Ethernet/M12 cable			
Connection X2 - network connection			
M12 cable plug, straight, 4-pin	Fitted with a 1 metre cable set	Ethernet RJ45	88450499
	Fitted with a 4 metre cable set		88450500
	Fitted with a 15 metre cable set		88450502
M12 cable plug, angled, 4-pin	Fitted with a 4 metre cable set		88715615
Connection X3 – analogue/digital inputs and outputs			
M12 cable socket, straight, 8-pin	Without cable dia. 6–8 mm		88304829 [1)]
	Fitted with a 5 metre cable set, PUR black cable		88758155
M12 cable socket, angled, 8-pin	Without cable dia. 6–8 mm		88422823
	Fitted with a 5 metre cable set, PUR black cable		88374574
Connection X4 – actual value supply, actual value input			
M12 cable plug, straight, 5-pin	Without cable PG7	Nickel-plated brass	88208641
	Fitted with a 2 metre cable set, PUR black cable	5 x 0.34, nickel-plated brass	88208643
	Fitted with a 5 metre cable set, PUR black cable	5 x 0.34, nickel-plated brass	88208644
M12 cable plug, angled, 5-pin	Without cable dia. 6–8 mm	Nickel-plated brass	88208645
	Fitted with a 2 metre cable set, PUR black cable	5 x 0.34, nickel-plated brass	88208649
	Fitted with a 5 metre cable set, PUR black cable	5 x 0.34, nickel-plated brass	88208650

1) provided in the scope of delivery

GEMÜ 1571

Emergency power supply module

The GEMÜ 1571 capacitive emergency power supply module is suitable for valves with motorized actuators such as GEMÜ eSyStep and eSyDrive as well as the GEMÜ C53 iComLine control valve. In the event of a power failure, the product provides an uninterrupted power supply so that the valve can be moved to the safety position. The emergency power supply module is available individually or with an expansion module and can supply several valves. The input and output voltage is 24 V.

GEMÜ 1571 emergency power supply module			
Input voltage	Output voltage	Capacity	Item number
24 V	24 V	1700 Ws	88660398
24 V	24 V	13200 Ws	88751062

GEMÜ 1573

Switching power supply unit

The GEMÜ 1573 switching power supply unit converts unstable input voltages from 100 to 240 V AC into a continuous DC voltage. It can be used as an accessory for valves with motorized actuators e. g. GEMÜ eSyLite, eSyStep und eSyDrive and for additional devices with a 24 V DC power supply. Different power levels, output currents and a 48 V DC version for servoDrive actuators are available.

GEMÜ 1573 switching power supply unit			
Input voltage	Output voltage	Output current	Item number
100 - 240 V AC	24 V DC	5 A	88660400
		10 A	88660401

GEMÜ Gebr. Müller Apparatebau GmbH & Co. KG
Fritz-Müller-Straße 6-8, 74653 Ingelfingen-Criesbach, Germany
Phone +49 (0) 7940 1230 · info@gemue.de
www.gemu-group.com

Subject to alteration | 06.2025 | 88654645