GEMÜ 601 / 602 / 612 / 673

Manually operated diaphragm valve

Features

- Compact design (ideal when space is at a premium)
- CIP/SIP capable
- Autoclave capability
- Long diaphragm service life thanks to patented closing stroke limiter
- Continuous minimum flow regulation thanks to closing stroke limiter
- Optional PVDF handwheel available in white (not autoclavable)

Description

The manually operated GEMÜ 601, GEMÜ 612 and GEMÜ 673 2/2-way diaphragm valves have a temperature-resistant plastic handwheel. GEMÜ 602 has a stainless steel handwheel. The bonnet and internals are made entirely from stainless steel. A seal adjuster to increase the service life of the diaphragm and an optical position indicator are integrated as standard.

Technical specifications

- **Media temperature:** -10 to 100 °C
- **Sterilization temperature:** max. 150 °C
- **Ambient temperature:** 0 to 60 °C
- **Operating pressure:** 0 up to 10 bar
- **Nominal sizes:** DN 6 to 65
- **Body configurations:** 2/2-way body I i-body I Multi-port bodies I T body I Tank valve body I Welding configuration
- **Connection types:** I I Clamp I Flange I Spigot I Thread
- **Connection standards:** ANSI I ASME I BS I DIN I EN I ISO I JIS I SMS
- **Body materials:** 1.4408, investment casting material I 1.4435 (BN2), forged material I 1.4435 (F316L), forging material I 1.4435, investment casting material I 1.4539 (904L), forged material I EN-GJS-400-18-LT (GGG 40.3)
- **Body lining:** PFA I PP
- **Diaphragm materials:** EPDM I FKM I PTFE/EPDM I PTFE/PVDF/EPDM
- **Conformities:** 3A I Belgaqua I CRN I EAC I FDA I Oxygen I Regulation (EC) No. 1935/2004 I Regulation (EC) No. 2023/2006 I Regulation (EU) No. 10/2011 I TA Luft (German Clean Air Act) I USP

Technical data depends on the respective configuration

Product description

Construction

GEMÜ 601, 602

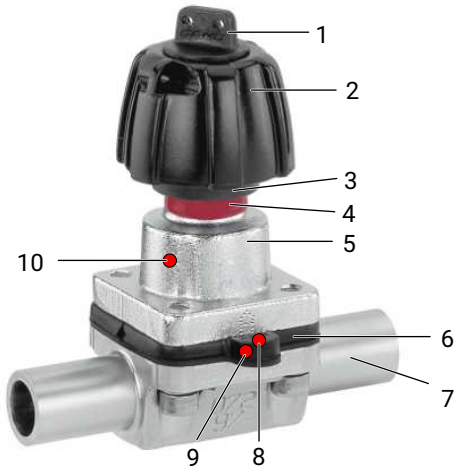

Position	Name	Materials
1	Locking screw	
2	Handwheel	GEMÜ 601: Temperature-resistant plastic GEMÜ 602: Stainless steel
3	Adjusting ring for seal adjuster	
4	Optical position indicator	
5	Actuator cover	
6	Diaphragm	EPDM FKM PTFE/EPDM (one-piece)
7	Valve body	1.4408, investment casting 1.4435, investment casting 1.4435 (F316L), forged body 1.4435 (BN2), forged body, Δ Fe < 0.5% 1.4539, forged body
8	CONEXO diaphragm RFID chip (see Conexo information)	
9	CONEXO body RFID chip (see Conexo information)	
10	CONEXO actuator RFID chip – additionally fitted metal tag (see Conexo information)	

GEMÜ 612

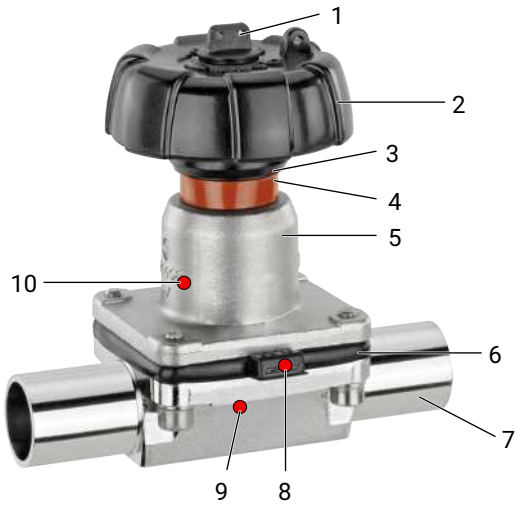

Position	Name	Materials
1	Locking screw	
2	Handwheel	Temperature-resistant plastic
3	Adjusting ring for seal adjuster	
4	Optical position indicator	
5	Actuator cover	
6	Diaphragm	EPDM FKM PTFE/EPDM (one-piece)
7	Valve body	1.4408, investment casting 1.4435, investment casting 1.4435 (F316L), forged body 1.4435 (BN2), forged body, Δ Fe < 0.5% 1.4539, forged body
8	CONEXO diaphragm RFID chip (see Conexo information)	
9	CONEXO body RFID chip (see Conexo information)	
10	CONEXO actuator RFID chip (see Conexo information)	

GEMÜ 673

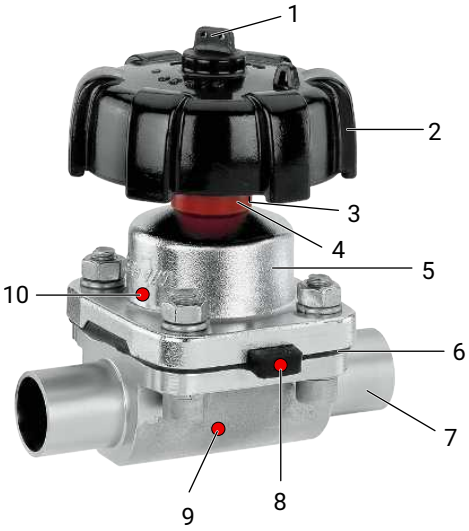

Position	Name	Materials
1	Locking screw	
2	Handwheel	Temperature-resistant plastic
3	Adjusting ring for seal adjuster	
4	Optical position indicator	
5	Actuator cover	
6	Diaphragm	EPDM FKM PTFE/EPDM (one-piece, two-piece) PTFE/PVDF/EPDM (three-piece)
7	Valve body	EN-GJS-400-18-LT (GGG 40.3), PFA lined EN-GJS-400-18-LT (GGG 40.3), PP lined 1.4408, investment casting 1.4408, PFA lined 1.4435 (F316L), forged body 1.4435 (BN2), forged body, Δ Fe < 0.5% 1.4435, investment casting 1.4539, forged body
8	CONEXO diaphragm RFID chip (see Conexo information)	
9	CONEXO body RFID chip (see Conexo information)	
10	CONEXO actuator RFID chip (see Conexo information)	

GEMÜ Conexo

The interaction of valve components that are equipped with RFID chips and an associated IT infrastructure actively increase process reliability.

Thanks to serialization, every valve and every relevant valve component such as the body, actuator or diaphragm, and even automation components, can be clearly traced and read using the CONEXO pen RFID reader. The CONEXO app, which can be installed on mobile devices, not only facilitates and improves the "installation qualification" process, but also makes the maintenance process much more transparent and easier to document. The app actively guides the maintenance technician through the maintenance schedule and directly provides him with all the information assigned to the valve, such as test reports, testing documentation and maintenance histories. The CONEXO portal acts as a central element, helping to collect, manage and process all data.

For further information on GEMÜ CONEXO please visit:
www.gemu-group.com/conexo

Ordering

GEMÜ Conexo must be ordered separately with the ordering option "CONEXO".

Availabilities

Availability of grades of surface finish

Internal surface finishes for forged and block material bodies [1)]

Process contact surfaces	Mechanically polished [2)]		Electropolished	
	Hygiene class DIN 11866	Code	Hygiene class DIN 11866	Code
Ra ≤ 0.80 µm	H3	1502	HE3	1503
Ra ≤ 0.60 µm	-	1507	-	1508
Ra ≤ 0.40 µm	H4	1536	HE4	1537
Ra [3)] ≤ 0.25 µm	H5	1527	HE5	1516

Process contact surfaces in accordance with ASME BPE 2016 [4)]	Mechanically polished [2)]		Electropolished	
	ASME BPE surface designation	Code	ASME BPE surface designation	Code
Ra Max. = 0.76 µm	SF3	SF3	-	-
Ra Max. = 0.64 µm	SF2	SF2	SF6	SF6
Ra Max. = 0.51 µm	SF1	SF1	SF5	SF5
Ra Max. = 0.38 µm	-	-	SF4	SF4

Internal surface finishes for investment cast bodies

Process contact surfaces	Mechanically polished [2)]	
	Hygiene class DIN 11866	Code
Ra ≤ 6.30 µm	-	1500
Ra ≤ 0.80 µm	H3	1502
Ra [5)] ≤ 0.60 µm	-	1507

Ra acc. to DIN EN ISO 4288 and ASME B46.1

1) Surface finishes of customized valve bodies may be limited in special cases.

2) Or any other finishing method that meets the Ra value (acc. to ASME BPE).

3) The smallest possible Ra value for pipe inside diameter < 6 mm is 0.38 µm.

4) When using these surfaces, the bodies are marked according to the specifications of ASME BPE.
The surfaces are only available for valve bodies which are made of materials (e.g. GEMÜ material codes 40, 41, F4, 44)) and use connections (e.g. GEMÜ connection codes 59, 80, 88) according to ASME BPE.

5) Not possible for GEMÜ connection code 59, DN 8 and GEMÜ connection code 0, DN 4.

Availability of valve bodies

Spigot

Type	MG	DN	Connection type code [1]																	
			0		16	17		18	35	36	37		55	59		60		63	64	65
			Material code [2]																	
			C3	40, 42, A1, A3, F4	40, 42, A1, A3, F4	C3	40, 42, A1, A3, F4	40, 42, A1, A3, F4	40, 42, A1, A3, F4	40, 42, A1, A3, F4	C3	40, 42, A1, A3, F4	40, 42, A1, A3, F4	C3	40, 42, A1, A3, F4	C3	40, 42, A1, A3, F4	40, 42, A1, A3, F4	40, 42, A1, A3, F4	40, 42, A1, A3, F4
GEMÜ 601, 602	**8**	**4**	X	X	-	-	-	-	-	-	-	-	-	-	-	-	-	-	-	-
		6	-	-	-	X	X	-	-	X	-	-	-	-	-	-	X	X	-	X
		8	-	-	-	X	X	-	-	X	-	-	X	X	X	X	X	X	-	X
		10	-	-	X	X	X	X	-	-	-	-	X	X	X	-	-	-	-	-
		15	-	-	-	-	-	-	-	-	-	-	X	X	X	-	-	-	-	-
GEMÜ 612	**10**	**10**	-	-	X	X	X	X	-	X	-	-	X	-	X	X	X	X	-	X
		15	-	X	X	X	X	X	-	X	-	-	X	-	X	X	X	X	X	X
		20	-	-	-	-	-	-	-	-	-	-	X	X	X	-	-	-	-	-
GEMÜ 673	**25**	**15**	-	X	X	X	X	X	-	X	-	-	-	-	-	X	X	X	X	X
		20	-	X	X	X	X	X	-	X	-	-	X	X	X	X	X	X	X	X
		25	-	X	X	X	X	X	X	X	X	X	-	X	X	X	X	X	X	X
	40	**32**	-	X	X	X	X	X	X	X	-	X	-	-	-	X	X	X	X	X
		40	-	X	X	X	X	X	X	X	X	X	-	X	X	X	X	X	X	X
	50	**50**	-	X	X	X	X	X	X	X	X	X	-	X	X	X	X	X	X	X
		65	-	-	-	-	-	-	X	-	-	X	-	-	X	-	-	-	-	-

MG = diaphragm size, X = standard

1) **Connection type**
Code 0: Spigot DIN
Code 16: Spigot DIN EN 10357 series B (2014 edition; formerly DIN 11850 series 1)
Code 17: Spigot EN 10357 series A/DIN 11866 series A, formerly DIN 11850 series 2
Code 18: Spigot DIN 11850 series 3
Code 35: Spigot JIS-G 3447
Code 36: Spigot JIS-G 3459 schedule 10s
Code 37: Spigot SMS 3008
Code 55: Spigot BS 4825, Part 1
Code 59: Spigot ASME BPE/DIN EN 10357 series C (from 2022 edition)/DIN 11866 series C
Code 60: Spigot ISO 1127/DIN EN 10357 series C (2014 edition)/DIN 11866 series B
Code 63: Spigot ANSI/ASME B36.19M schedule 10s
Code 64: Spigot ANSI/ASME B36.19M schedule 5s
Code 65: Spigot ANSI/ASME B36.19M schedule 40s

2) **Valve body material**
Code 40: 1.4435 (F316L), forged body
Code 42: 1.4435 (BN2), forged body, Δ Fe < 0.5%
Code A1: 3.7035, titanium
Code A3: 2.4602, Alloy 22 block material, (NiCr21Mo14W)
Code F4: 1.4539 / UNS N08904, forged body
Code C3: 1.4435, investment casting

Threaded connection

Type	MG	DN	Connection type code [1]	
			1	6, 6K
			Material code [2]	
			37	40, 42, A3, F4
GEMÜ 601, 602	**8**	**8**	X	-
		10	-	W
GEMÜ 612	**10**	**10**	-	W
		12	X	-
		15	X	W
GEMÜ 673	**25**	**15**	X	W
		20	X	W
		25	X	W
	40	**32**	X	W
		40	X	W
	50	**50**	X	W

MG = diaphragm size, X = standard
W = welded assembly

1) **Connection type**
Code 1: Threaded socket DIN ISO 228
Code 6: Threaded spigot DIN 11851
Code 6K: Cone spigot and union nut DIN 11851

2) **Valve body material**
Code 37: 1.4408, investment casting
Code 40: 1.4435 (F316L), forged body
Code 42: 1.4435 (BN2), forged body, Δ Fe < 0.5%
Code F4: 1.4539 / UNS N08904, forged body
Code A3: 2.4602, Alloy 22 block material, (NiCr21Mo14W)

Flange

Type	MG	DN	Connection type code [1]					
			8		34	38	39	
			Material code [2]					
			17, 18, 39	40, 42, C3	39	17, 18 [3], 39	17, 18, 39	40, 42, C3
GEMÜ 673	**25**	**15**	X	W	X	-	X	W
		20	X	W	X	X	X	W
		25	X	W	X	X	X	W
	40	**32**	X	W	X	-	X	W
		40	X	W	X	X	X	W
	50	**50**	X	W	X	X	X	W
		65	X	-	-	X	X	W

MG = diaphragm size, X = standard
W = welded assembly

1) **Connection type**
Code 8: Flange EN 1092, PN 16, form B, face-to-face dimension FTF EN 558 series 1, ISO 5752, basic series 1, length only for body configuration D
Code 34: Flange JIS B2220, 10K, RF, face-to-face dimension FTF EN 558 series 1, ISO 5752, basic series 1, length only for body configuration D
Code 38: Flange ANSI Class 150 RF, face-to-face dimension FTF MSS SP-88, length only for body configuration D
Code 39: Flange ANSI Class 125/150 RF, face-to-face dimension FTF EN 558 series 1, ISO 5752, basic series 1, length only for body configuration D

2) **Valve body material**
Code 17: EN-GJS-400-18-LT (GGG 40.3), PFA lined
Code 18: EN-GJS-400-18-LT (GGG 40.3), PP lined
Code 39: 1.4408, PFA lined
Code 40: 1.4435 (F316L), forged body
Code 42: 1.4435 (BN2), forged body, Δ Fe < 0.5%
Code C3: 1.4435, investment casting

3) On request

Clamp

Type	MG	DN	Connection type code [1]																	
			80, 8P		82		84		86		88, 8T		8A		8E		8F		8H	
			Material code [2]																	
			40, 42	F4	40, 42	F4	40, 42	F4	40, 42	F4	40, 42	F4	40, 42	F4	40, 42	F4	40, 42	F4	40, 42	F4
GEMÜ 601, 602	**8**	**6**	-	-	K	K	-	-	-	-	-	-	K	K	-	-	-	-	-	-
		8	K	K	K	K	-	-	-	-	-	-	K	K	-	-	-	-	W	W
		10	K	K	-	-	-	-	W	W	-	-	W	W	-	-	-	-	-	-
		15	K	K	-	-	W	W	-	-	W	W	-	-	-	-	-	-	-	-
GEMÜ 612	**10**	**10**	K	W	K	W	-	-	W	W	-	-	K	W	-	-	-	-	K	W
		15	K	W	W	W	K	W	W	W	K	W	K	W	-	-	-	-	K	W
		20	K	W	-	-	K	W	-	-	K	W	-	-	-	-	-	-	-	-
GEMÜ 673	**25**	**15**	-	-	W	W	K	K	W	W	-	-	K	K	-	-	-	-	K	W
		20	K	K	K	W	K	K	W	W	K	K	K	K	-	-	-	-	-	-
		25	K	W	K	W	-	-	W	W	K	W	K	W	K	W	K	W	-	-
	40	**32**	-	-	W	W	-	-	W	W	-	-	K	K	K	K	K	K	-	-
		40	K	K	W	W	-	-	W	W	K	K	K	K	K	K	K	K	-	-
	50	**50**	K	K	W	W	-	-	W	W	K	K	K	K	K	K	K	K	-	-
		65	W	W	-	-	-	-	-	-	W	W	-	-	W	W	W	W	-	-

MG = diaphragm size, X = standard
K = connections completely machined (not welded)
W = welded assembly

1) **Connection type**
Code 80: Clamp ASME BPE, face-to-face dimension FTF ASME BPE, length only for body configurations D & F
Code 82: Clamp DIN 32676 series B, face-to-face dimension FTF EN 558 series 7, length only for body configuration D
Code 84: Clamp for pipe BS 4825 Part 1, DN 15 and DN 20, clamp OD 25.0 mm, face-to-face dimension FTF acc. to EN 558 series 7, length only for body configuration D
Code 86: Clamp DIN 32676 series A
Code 88: Clamp ASME BPE, for pipe ASME BPE, face-to-face dimension FTF EN 558 series 7, length only for body configurations D & F
Code 8A: Clamp DIN 32676 series A, face-to-face dimension FTF acc. to EN 558 series 7, length only for body configuration D
Code 8E: Clamp ISO 2852 for pipe ISO 2037, clamp SMS 3017 for pipe SMS 3008, face-to-face dimension FTF EN 558 series 7, length only for body configuration D
Code 8F: Clamp IDF/ISO for pipe JIS-G 3447, face-to-face dimension FTF EN 558 series 7, length only for body configuration D
Code 8H: Clamp IDF/ISO for pipe JIS-G 3459, face-to-face dimension FTF EN 558 series 7, length only for body configuration D
Code 8P: Clamp DIN 32676 series C, face-to-face dimension FTF ASME BPE, length only for body configurations D & F
Code 8T: Clamp DIN 32676 series C, face-to-face dimension FTF EN 558 series 7, length only for body configurations D & F

2) **Valve body material**
Code 40: 1.4435 (F316L), forged body
Code 42: 1.4435 (BN2), forged body, Δ Fe < 0.5%
Code F4: 1.4539 / UNS N08904, forged body

Aseptic connections

MG	DN	Body configuration D								
		Connection type code [1]								
		Flange			Threaded connection			Clamp		
		A1, A2	A4, A5	A7, A8	C1, C2	C4, C5	C7, C8	E1, E2	E4, E5	E7, E8
		Material code 40, 42, 44, F4, A3								
8	**8**	-	X	-	-	X	-		X	-
	10	X	-	-	X	-	-	X	-	-
	15	-	-	X	-	-	X	-	-	X
10	**10**	X	X	-	X	X	-	X	X	-
	15	X	X	X	X	X	X	X	X	X
	20	-	-	X	-	-	X	-	-	X
25	**15**	X	X	X	X	X	X	X	X	X
	20	X	X	X	X	X	X	X	X	X
	25	X	X	X	X	X	X	X	X	X

MG = diaphragm size
X = Standard

1) **Connection type**
Code A1: Aseptic grooved flange DIN 11864-NF, for pipe DIN 11866 Series A and EN 10357 Series A, overall length FTF EN 558 Series 1, overall length only for housing form D
Code A2: Aseptic loose flange DIN 11864-BF, for pipe DIN 11866 Series A and EN 10357 Series A, overall length FTF EN 558 Series 1, overall length only for housing form D
Code A4: Aseptic grooved flange DIN 11864-NF, for pipe DIN 11866 series B and EN ISO 1127, overall length FTF EN 558 series 1, overall length only for housing form D
Code A5: Aseptic loose flange DIN 11864-BF, for pipe DIN 11866 series B and EN ISO 1127 Overall length FTF EN 558 series 1, Overall length only for housing form D
Code A7: Aseptic grooved flange DIN 11864-NF, for pipe DIN 11866 series C and ASME BPE, face-to-face dimension FTF EN 558 series 1, length only for body configurations D & F
Code A8: Aseptic loose flange DIN 11864-BF, for pipe DIN 11866 series C and ASME BPE, face-to-face dimension FTF EN 558 series 1, length only for body configurations D & F
Code C1: Aseptic threaded spigot DIN 11864-GS, for pipe DIN 11866 Series A and EN 10357 Series A
Code C2: Aseptic union nipple with groove cap nut DIN 11864-BS, for pipe DIN 11866 Series A and EN 10357 Series A
Code C4: Aseptic threaded spigot DIN 11864-GS, for pipe DIN 11866 series B and EN ISO 1127
Code C5: Aseptic union nipple with groove cap nut DIN 11864-BS, for pipe DIN 11866 series B and EN ISO 1127
Code C7: Aseptic threaded spigot DIN 11864-GS, for pipe DIN 11866 series C and ASME BPE
Code C8: Aseptic union nipple with groove cap nut DIN 11864-BS, for pipe DIN 11866 series C and ASME BPE
Code E1: Aseptic grooved clamp DIN 11864-NKS, for pipe DIN 11866 series A and EN 10357 series A, overall length FTF EN 558 series 7, overall length only for housing form D
Code E2: Aseptic notched clamp DIN 11864-BKS, for pipe DIN 11866 series A and EN 10357 series A, overall length FTF EN 558 series 7, overall length only for housing form D
Code E4: Grooved clamp DIN 11864-NKS, for pipe DIN 11866 series B and EN ISO 1127, overall length FTF EN 558 series 7, overall length only for housing form D
Code E5: Aseptic notched clamp DIN 11864-BKS, for pipe DIN 11866 series B and EN ISO 1127, overall length FTF EN 558 series 7, overall length only for housing form D
Code E7: Aseptic grooved clamp DIN 11864-NKS, for pipe DIN 11866 series C/ASME BPE, face-to-face dimension FTF EN 558 series 7, length only for body configurations D & F
Code E8: Aseptic notched clamp DIN 11864-BKS, for pipe DIN 11866 series C/ASME BPE, face-to-face dimension FTF EN 558 series 7, length only for body configurations D & F

MG	DN	Body configuration D								
		Connection type code [1]								
		Flange			Threaded connection			Clamp		
		A1, A2	A4, A5	A7, A8	C1, C2	C4, C5	C7, C8	E1, E2	E4, E5	E7, E8
		Material code 40, 42, 44, F4, A3								
40	**32**	X	X	-	X	X	-	X	X	-
	40	X	X	X	X	X	X	X	X	X
50	**50**	X	X	X	X	X	X	X	X	X
	65	-	-	X	-	-	X	-	-	X
80	**65**	X	X	X	X	X	X	X	X	X
	80	X	X	X	X	X	X	X	X	X
100	**100**	X	X	X	X	-	X	X	-	X

MG = diaphragm size
X = Standard

1) **Connection type**
Code A1: Aseptic grooved flange DIN 11864-NF, for pipe DIN 11866 Series A and EN 10357 Series A, overall length FTF EN 558 Series 1, overall length only for housing form D
Code A2: Aseptic loose flange DIN 11864-BF, for pipe DIN 11866 Series A and EN 10357 Series A, overall length FTF EN 558 Series 1, overall length only for housing form D
Code A4: Aseptic grooved flange DIN 11864-NF, for pipe DIN 11866 series B and EN ISO 1127, overall length FTF EN 558 series 1, overall length only for housing form D
Code A5: Aseptic loose flange DIN 11864-BF, for pipe DIN 11866 series B and EN ISO 1127 Overall length FTF EN 558 series 1, Overall length only for housing form D
Code A7: Aseptic grooved flange DIN 11864-NF, for pipe DIN 11866 series C and ASME BPE, face-to-face dimension FTF EN 558 series 1, length only for body configurations D & F
Code A8: Aseptic loose flange DIN 11864-BF, for pipe DIN 11866 series C and ASME BPE, face-to-face dimension FTF EN 558 series 1, length only for body configurations D & F
Code C1: Aseptic threaded spigot DIN 11864-GS, for pipe DIN 11866 Series A and EN 10357 Series A
Code C2: Aseptic union nipple with groove cap nut DIN 11864-BS, for pipe DIN 11866 Series A and EN 10357 Series A
Code C4: Aseptic threaded spigot DIN 11864-GS, for pipe DIN 11866 series B and EN ISO 1127
Code C5: Aseptic union nipple with groove cap nut DIN 11864-BS, for pipe DIN 11866 series B and EN ISO 1127
Code C7: Aseptic threaded spigot DIN 11864-GS, for pipe DIN 11866 series C and ASME BPE
Code C8: Aseptic union nipple with groove cap nut DIN 11864-BS, for pipe DIN 11866 series C and ASME BPE
Code E1: Aseptic grooved clamp DIN 11864-NKS, for pipe DIN 11866 series A and EN 10357 series A, overall length FTF EN 558 series 7, overall length only for housing form D
Code E2: Aseptic notched clamp DIN 11864-BKS, for pipe DIN 11866 series A and EN 10357 series A, overall length FTF EN 558 series 7, overall length only for housing form D
Code E4: Grooved clamp DIN 11864-NKS, for pipe DIN 11866 series B and EN ISO 1127, overall length FTF EN 558 series 7, overall length only for housing form D
Code E5: Aseptic notched clamp DIN 11864-BKS, for pipe DIN 11866 series B and EN ISO 1127, overall length FTF EN 558 series 7, overall length only for housing form D
Code E7: Aseptic grooved clamp DIN 11864-NKS, for pipe DIN 11866 series C/ASME BPE, face-to-face dimension FTF EN 558 series 7, length only for body configurations D & F
Code E8: Aseptic notched clamp DIN 11864-BKS, for pipe DIN 11866 series C/ASME BPE, face-to-face dimension FTF EN 558 series 7, length only for body configurations D & F

See also

Clamp [▸ 10]

Availability of diaphragm materials

Type	Diaphragm size	Elastomer	PTFE
GEMÜ 601, 602	**8**	3A, 4A	54
GEMÜ 612	**10**	4, 13, 17, 19	54
GEMÜ 673	**25 - 50**	4, 13, 17, 19	54, 5M, 5Y, 71

Availability of product conformity

	Diaphragm material code [1)]	Body material code [2)]
Drinking water		
Belgaqua (B)	28	37, C3

1) **Diaphragm material**
Code 28: EPDM

2) **Valve body material**
Code 37: 1.4408, investment casting

Order data

The order data provide an overview of standard configurations.

Please check the availability before ordering. Other configurations available on request.

Order codes

1 Type	Code
Diaphragm valve, manually operated, plastic handwheel, stainless steel distance piece, seal adjuster, optical position indicator	601
Diaphragm valve, manually operated, stainless steel handwheel, optical position indicator	602
Diaphragm valve, manually operated, plastic handwheel, stainless steel distance piece, seal adjuster, optical position indicator	612
Diaphragm valve, manually operated, plastic handwheel, metal distance piece, seal adjuster, optical position indicator	673

2 DN	Code
GEMÜ 601, 602	
DN 6	6
DN 8	8
DN 10	10
DN 15	15
GEMÜ 612	
DN 10	10
DN 15	15
DN 20	20
GEMÜ 673	
DN 15	15
DN 20	20
DN 25	25
DN 32	32
DN 40	40
DN 50	50
DN 65	65

3 Body configuration	Code
Tank bottom valve body	B
Body configuration code B: Dimensions and designs on request	
2/2-way body	D
T body	T
Body configuration code T: Dimensions on request	

4 Connection type	Code
Spigot	
Spigot DIN	0
Spigot DIN EN 10357 series B (2014 edition; formerly DIN 11850 series 1)	16

4 Connection type	Code
Spigot EN 10357 series A/DIN 11866 series A, formerly DIN 11850 series 2	17
Spigot DIN 11850 series 3	18
Spigot JIS-G 3447	35
Spigot JIS-G 3459 schedule 10s	36
Spigot SMS 3008	37
Spigot BS 4825, Part 1	55
Spigot ASME BPE/DIN EN 10357 series C (from 2022 edition)/DIN 11866 series C	59
Spigot ISO 1127/DIN EN 10357 series C (2014 edition)/ DIN 11866 series B	60
Spigot ANSI/ASME B36.19M schedule 10s	63
Spigot ANSI/ASME B36.19M schedule 5s	64
Spigot ANSI/ASME B36.19M schedule 40s	65
Threaded connection	
Threaded socket DIN ISO 228	1
Threaded socket DIN ISO 228 body length (FTF): 75 mm	1L
Threaded spigot DIN 11851	6
Cone spigot and union nut DIN 11851	6K
Flange	
Flange EN 1092, PN 16, form B, face-to-face dimension FTF EN 558 series 1, ISO 5752, basic series 1, length only for body configuration D	8
Flange JIS B2220, 10K, RF, face-to-face dimension FTF EN 558 series 1, ISO 5752, basic series 1, length only for body configuration D	34
Flange ANSI Class 150 RF, face-to-face dimension FTF MSS SP-88, length only for body configuration D	38
Flange ANSI Class 125/150 RF, face-to-face dimension FTF EN 558 series 1, ISO 5752, basic series 1, length only for body configuration D	39
Clamp	
Clamp ASME BPE, face-to-face dimension FTF ASME BPE, length only for body configurations D & F	80
Clamp DIN 32676 series B, face-to-face dimension FTF EN 558 series 7, length only for body configuration D	82
Clamp for pipe BS 4825 Part 1, DN 15 and DN 20, clamp OD 25.0 mm, face-to-face dimension FTF acc. to EN 558 series 7, length only for body configuration D	84
Clamp DIN 32676 series A	86

4 Connection type	Code
Clamp ASME BPE, for pipe ASME BPE, face-to-face dimension FTF EN 558 series 7, length only for body configurations D & F	88
Clamp DIN 32676 series A, face-to-face dimension FTF acc. to EN 558 series 7, length only for body configuration D	8A
Clamp ISO 2852 for pipe ISO 2037, clamp SMS 3017 for pipe SMS 3008, face-to-face dimension FTF EN 558 series 7, length only for body configuration D	8E
Clamp IDF/ISO for pipe JIS-G 3447, face-to-face dimension FTF EN 558 series 7, length only for body configuration D	8F
Clamp IDF/ISO for pipe JIS-G 3459, face-to-face dimension FTF EN 558 series 7, length only for body configuration D	8H
Clamp DIN 32676 series C, face-to-face dimension FTF ASME BPE, length only for body configurations D & F	8P
Clamp DIN 32676 series C, face-to-face dimension FTF EN 558 series 7, length only for body configurations D & F	8T

5 Valve body material	Code
SG iron material	
EN-GJS-400-18-LT (GGG 40.3), PFA lined	17
EN-GJS-400-18-LT (GGG 40.3), PP lined	18
Investment casting material	
1.4408, investment casting	37
1.4408, PFA lined	39
1.4435, investment casting	C3
Forged material	
1.4435 (F316L), forged body	40
1.4435 (BN2), forged body, Δ Fe < 0.5%	42
1.4539 / UNS N08904, forged body	F4

6 Diaphragm material	Code
Elastomer	
EPDM	3A
FKM	4
FKM	4A
EPDM	13
EPDM	17
EPDM	19
PTFE	
PTFE/EPDM one-piece	54
PTFE/EPDM two-piece	5M
PTFE/EPDM two-piece for lining bodies	5Y
PTFE/PVDF/EPDM three-piece	71
Note: The EPDM diaphragms (code 3A, 4A) are only available for diaphragm size 8.	

6 Diaphragm material	Code
Note: The PTFE/EPDM diaphragm (code 5M) is available from diaphragm size 25.	
Note: The PTFE/EPDM diaphragm (code 5Y) is available for diaphragm size 25 and can only be combined with PFA-lined valve bodies.	
Note: The PTFE/PVDF/EPDM diaphragm (code 71) can only be combined with PFA lined valve bodies.	
Note: Material complies with FDA requirements, except code 4 and 4A	

7 Control function	Code
Manually operated	0

8 Actuator version	Code
GEMÜ 601	
DN 4 - 15, diaphragm size 8	
With seal adjuster, black handwheel	0TS
GEMÜ 602	
DN 4 - 15, diaphragm size 8	
With seal adjuster, metal handwheel	0TM
GEMÜ 612	
DN 10–20, diaphragm size 10	
With seal adjuster, black handwheel	1TS
GEMÜ 673	
DN 15 - 25, diaphragm size 25	
With seal adjuster, black handwheel	2TS
DN 32 - 40, diaphragm size 40	
With seal adjuster, black handwheel	3TS
DN 50–65, diaphragm size 50	
With seal adjuster, black handwheel	4TS

9 Surface	Code
Ra ≤ 6.3 µm for media wetted surfaces, mechanically polished internal	1500
Ra ≤ 0.8 µm for media wetted surfaces, in accordance with DIN 11866 H3, mechanically polished internal	1502
Ra ≤ 0.8 µm for media wetted surfaces, in accordance with DIN 11866 HE3, electropolished internal/external	1503
Ra ≤ 0.6 µm for media wetted surfaces, mechanically polished internal	1507
Ra ≤ 0.6 µm for media wetted surfaces, electropolished internal/external	1508
Ra ≤ 0.25 µm for media wetted surfaces *), in accordance with DIN 11866 HE5, electropolished internal/external, *) for inner pipe diameter < 6 mm, in spigot Ra ≤ 0.38 µm	1516
Ra ≤ 0.25 µm for media wetted surfaces *), in accordance with DIN 11866 H5, mechanically polished internal, *) for inner pipe diameter < 6 mm, in spigots Ra ≤ 0.38 µm	1527
Ra ≤ 0.4 µm for media wetted surfaces, in accordance with DIN 11866 H4, mechanically polished internal	1536

9 Surface	Code
Ra ≤ 0.4 µm for media wetted surfaces, in accordance with DIN 11866 HE4, electropolished internal/external	1537
Ra max. 0.51 µm (20 µin.) for media wetted surfaces, in accordance with ASME BPE SF1, mechanically polished internal	SF1
Ra max. 0.64 µm (25 µin.) for media wetted surfaces, in accordance with ASME BPE SF2, mechanically polished internal	SF2
Ra max. 0.76 µm (30 µin.) for media wetted surfaces, in accordance with ASME BPE SF3, mechanically polished internal	SF3
Ra max. 0.38 µm (15 µin.) for media wetted surfaces, in accordance with ASME BPE SF4, electropolished internal/external	SF4
Ra max. 0.51 µm (20 µin.) for media wetted surfaces, in accordance with ASME BPE SF5, electropolished internal/external	SF5

9 Surface	Code
Ra max. 0.64 µm (25 µin.) for media wetted surfaces, in accordance with ASME BPE SF6, electropolished internal/external	SF6

10 Special version	Code
Without	
Special version for 3A	M
Special version for oxygen applications. Operating temperature restricted according to product label. Media wetted materials cleaned. Seals and oxygen grease used tested according to DIN EN 1797 / ISO 21010	S
BELGAQUA certification	B

11 CONEXO	Code
Without	
Integrated RFID chip for electronic identification and traceability	C

Order example

Ordering option	Code	Description
1 Type	601	Diaphragm valve, manually operated, plastic handwheel, stainless steel distance piece, seal adjuster, optical position indicator
2 DN	8	DN 8
3 Body configuration	D	2/2-way body
4 Connection type	60	Spigot ISO 1127/DIN EN 10357 series C (2014 edition)/DIN 11866 series B
5 Valve body material	C3	1.4435, investment casting
6 Diaphragm material	54	PTFE/EPDM one-piece
7 Control function	0	Manually operated
8 Actuator version	0TS	With seal adjuster, black handwheel
9 Surface	1500	Ra ≤ 6.3 µm for media wetted surfaces, mechanically polished internal
10 Special version		Without
11 CONEXO		Without

Technical data

Medium

Working medium: Corrosive, inert, gaseous and liquid media which have no negative impact on the physical and chemical properties of the body and diaphragm material.

For special oxygen version (code S): only gaseous oxygen

Temperature

Sterilization temperature:

EPDM (code 3A/13)	max. 150 °C, max. 60 min per cycle
FKM (code 4/4A)	not applicable
EPDM (code 17)	max. 150 °C, max. 180 min per cycle
EPDM (code 19)	max. 150 °C, max. 180 min per cycle
PTFE/EPDM (code 54)	max. 150 °C, constant temperature per cycle
PTFE/PVDF/EPDM (code 71)	not applicable
PTFE/EPDM (code 5M)	max. 150 °C, constant temperature per cycle
PTFE/EPDM (Code 5Y)	Max. 150 °C, constant temperature per cycle

The sterilization temperature is only valid for steam (saturated steam) or superheated water.
If the sterilization temperatures listed above are applied to the EPDM diaphragms for longer periods of time, the service life of the diaphragms will be reduced. In these cases, maintenance cycles must be adapted accordingly.
PTFE diaphragms can also be used as steam barriers; however, this will reduce their service life. This also applies to PTFE diaphragms exposed to high temperature fluctuations. The maintenance cycles must be adapted accordingly. GEMÜ 555 and 505 globe valves are particularly suitable for use in the area of steam generation and distribution. The following valve arrangement for interfaces between steam pipes and process pipes has proven itself over time: A globe valve for shutting off steam pipes and a diaphragm valve as an interface to the process pipes.

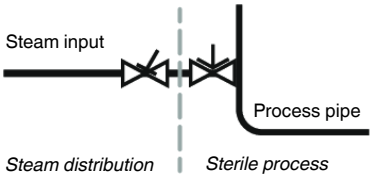

Ambient temperature: 0 — 60 °C

Storage temperature: 0 — 40 °C

Diaphragm material	Standard	Special version for oxygen
EPDM (code 3A/13)	-10 — 100 °C	0 — 60 °C
FKM (code 4/4A)	-10 — 90 °C	-
EPDM (code 17)	-10 — 100 °C	-
EPDM (code 19)	-10 — 100 °C	0 — 60 °C
PTFE/EPDM (code 54)	-10 — 100 °C	0 — 60 °C
PTFE/EPDM (code 5M)	-10 — 100 °C	0 — 60 °C
PTFE/EPDM (code 5Y)	-10 to 100 °C	0–100 °C
PTFE/PVDF/EPDM (code 71)	-10 — 100 °C	-

Pressure

Operating pressure:

Type	MG	DN	Diaphragm material			
			Elastomer	PTFE		
				Forged material	Investment casting material (code C3 with code 5M)	Casting material with and without lining
GEMÜ 601, 602	**8**	**4 - 15**	0 - 10	0 - 10	-	0 - 6
GEMÜ 612	**10**	**10 - 20**	0 - 10	0 - 10	-	0 - 6
GEMÜ 673	**25 - 50**	**15 - 65**	0 - 10	0 - 10	0 - 10	0 - 6

MG = diaphragm size
All pressures are gauge pressures. Operating pressure values were determined with static operating pressure applied on one side of a closed valve. Sealing at the valve seat and atmospheric sealing is ensured for the given values.
Information on operating pressures applied on both sides and for high purity media on request.

Pressure rating: PN 16

Leakage rate: Leakage rate A to P11/P12 EN 12266-1

Kv values:

MG	DN	Connection type code								
		0	16	17	18	37	59	60	1	31
8	**4**	0.5	-	-	-	-	-	-	-	-
	6	-	-	1.1	-	-	-	1.2	-	-
	8	-	-	1.3	-	-	0.6	2.2	1.4	-
	10	-	2.1	2.1	2.1	-	1.3	-	-	-
	15	-	-	-	-	-	2.0	-	-	-
10	**10**	-	2.4	2.4	2.4	-	2.2	3.3	-	-
	12	-	-	-	-	-	-	-	3.2	-
	15	3.3	3.8	3.8	3.8	-	2.2	4.0	3.4	-
	20	-	-	-	-	-	3.8	-	-	-
25	**15**	4.1	4.7	4.7	4.7	-	-	7.4	6.5	6.5
	20	6.3	7.0	7.0	7.0	-	4.4	13.2	10.0	10.0
	25	13.9	15.0	15.0	15.0	12.6	12.2	16.2	14.0	14.0
40	**32**	25.3	27.0	27.0	27.0	26.2	-	30.0	26.0	26.0
	40	29.3	30.9	30.9	30.9	30.2	29.5	32.8	33.0	33.0
50	**50**	46.5	48.4	48.4	48.4	51.7	50.6	55.2	60.0	60.0
	65	-	-	-	-	62.2	61.8	-	-	-

MG = diaphragm size
Kv values in m^3/h
Kv values determined in accordance with DIN EN 60534 standard, inlet pressure 5 bar, Δp 1 bar, stainless steel valve body and soft elastomer diaphragm. The Kv values for other product configurations (e.g. other diaphragm or body materials) may differ. In general, all diaphragms are subject to the influences of pressure, temperature, the process and their tightening torques. Therefore the Kv values may exceed the tolerance limits of the standard.
The Kv value curve (Kv value dependent on valve stroke) can vary depending on the diaphragm material and term of use.

Kv values:

MG	DN	Plastic lining
		Material code 17, 18, 39
25	**15**	5.0
	20	9.0
	25	13.0
40	**32**	23.0
	40	26.0
50	**50**	47.0
	65	47.0

MG = diaphragm size, Kv values in m³/h
Kv values determined in accordance with DIN EN 60534, inlet pressure 5 bar, Δp 1 bar, with connection flange EN 1092 length EN 558 series 1 (or threaded socket DIN ISO 228 for body material GGG40.3) and soft elastomer diaphragm. The Kv values for other product configurations (e.g. other diaphragm or body materials) may differ. In general, all diaphragms are subject to the influences of pressure, temperature, the process and their tightening torques. Therefore the Kv values may exceed the tolerance limits of the standard.
The Kv value curve (Kv value dependent on valve stroke) can vary depending on the diaphragm material and term of use.

Product conformity

Pressure Equipment Directive: 2014/68/EU

Food:
Regulation (EC) No. 1935/2006
Regulation (EC) No. 10/2011*
FDA*
USP* Class VI

Drinking water: Belgaqua*

TA Luft (German Clean Air Act): The product meets the following requirements under the maximum permissible operating conditions:

- Tightness or compliance with the specific leak rate as defined in TA Luft (German Clean Air Act) and VDI 2440 and VDI 2290
- Compliance with the requirements in accordance with DIN EN ISO 15848-1, Table C.2, Class BH

* depending on version and/or operating parameters

Mechanical data

Weight:

Actuator

Type	MG	DN	Weight
GEMÜ 601	**8**	**4 - 10**	0.10
GEMÜ 602	**8**	**4 - 10**	0.15
GEMÜ 612	**10**	**10 - 15**	0.40
GEMÜ 673	**25**	**15 – 25**	0.70
	40	**32 – 40**	1.30
	50	**50 – 65**	2.05

Weights in kg
MG = diaphragm size

Weight:

Body

Dia-phragm size	DN	Spigot	Threaded socket	Threaded spigot, cone spigot	Flange	Clamp
		Connection type code				
		0, 16, 17, 18, 35, 36, 37, 55, 59, 60, 63, 64, 65	1	6, 6K	8, 38, 39	80, 82, 84, 86, 88, 8A , 8E, 8F, 8H, 8P, 8T
8	**4**	0.09	-	-	-	-
	6	0.09	-	-	-	-
	8	0.09	0.09	-	-	0.15
	10	0.09	-	0.21	-	0.18
	15	0.09	-	-	-	0.18
10	**10**	0.30	-	0.33	-	0.30
	12	-	0.17	-	-	-
	15	0.30	0.26	0.35	-	0.43
	20	-	-	-	-	0.43
25	**15**	0.62	0.32	0.71	1.50	0.75
	20	0.58	0.34	0.78	2.20	0.71
	25	0.55	0.39	0.79	2.80	0.63
40	**32**	1.45	0.88	1.66	3.40	1.62
	40	1.32	0.93	1.62	4.50	1.50
50	**50**	2.25	1.56	2.70	6.30	2.50
	65	2.20	-	-	10.30	2.30

Weights in kg
MG = diaphragm size

Installation position:

Optional

Observe the angle of rotation for optimized draining when it comes to installation.
See separate document, "Angle of rotation technical information".

Dimensions

Actuator dimensions

GEMÜ 601

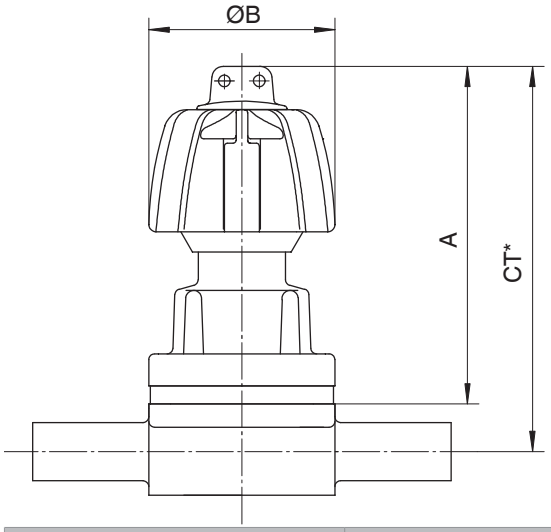

MG	DN	A	B
8	**4 - 15**	58.0	32.0

Dimensions in mm
MG = diaphragm size
* CT = A + H1 (see body dimensions)

GEMÜ 602

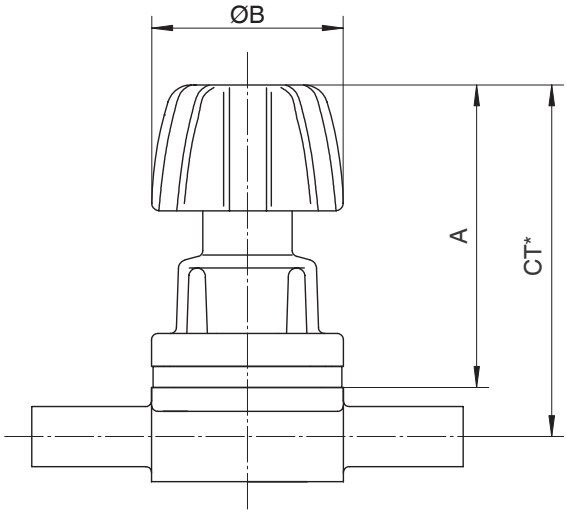

MG	DN	A	B
8	**4 - 15**	54.0	32.0

Dimensions in mm
MG = diaphragm size
* CT = A + H1 (see body dimensions)

GEMÜ 612/673

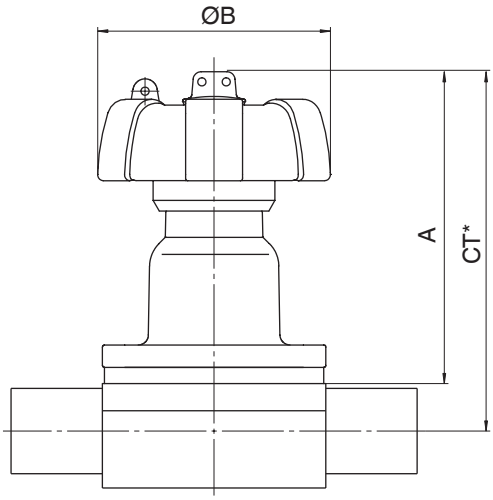

	MG	DN	A	B
GEMÜ 612	**10**	10 - 20	80.0	60.0
GEMÜ 673	**25**	15 - 25	102.0	90.0
	40	32 - 40	119.0	114.0
	50	50 - 65	136.0	140.0

Dimensions in mm
MG = diaphragm size
* CT = A + H1 (see body dimensions)

Body dimensions

Spigot DIN/EN/ISO (code 0, 16, 17, 18, 60)

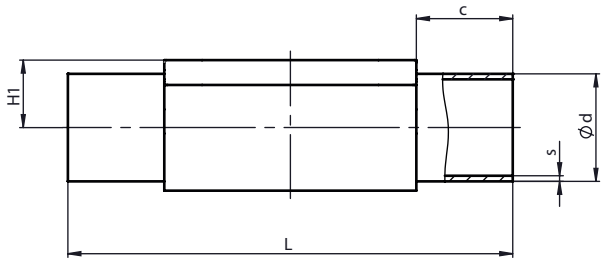

Connection type spigot DIN/EN/ISO (code 0, 16, 17, 18, 60) [1], forged material (code 40, 42, F4)

Type	MG	DN	NPS	c (min)	ød					H1	L	s				
					Connection type							Connection type				
					0	16	17	18	60			0	16	17	18	60
GEMÜ 601, 602	**8**	**4**	**-**	20.0	6.0	-	-	-	-	8.5	72.0	1.0	-	-	-	-
		6	**-**	20.0	-	-	8.0	-	10.2	8.5	72.0	-	-	1.0	-	1.6
		8	**1/4"**	20.0	-	-	10.0	-	13.5	8.5	72.0	-	-	1.0	-	1.6
		10	**3/8"**	20.0	-	12.0	13.0	14.0	-	8.5	72.0	-	1.0	1.5	2.0	-
GEMÜ 612	**10**	**10**	**3/8"**	25.0	-	12.0	13.0	14.0	17.2	12.5	108.0	-	1.0	1.5	2.0	1.6
		15	**1/2"**	25.0	18.0	18.0	19.0	20.0	21.3	12.5	108.0	1.5	1.0	1.5	2.0	1.6
GEMÜ 673	**25**	**15**	**1/2"**	25.0	18.0	18.0	19.0	20.0	21.3	19.0	120.0	1.5	1.0	1.5	2.0	1.6
		20	**3/4"**	25.0	22.0	22.0	23.0	24.0	26.9	19.0	120.0	1.5	1.0	1.5	2.0	1.6
		25	**1"**	25.0	28.0	28.0	29.0	30.0	33.7	19.0	120.0	1.5	1.0	1.5	2.0	2.0
	40	**32**	**1¼"**	25.0	34.0	34.0	35.0	36.0	42.4	26.0	153.0	1.5	1.0	1.5	2.0	2.0
		40	**1½"**	30.5	40.0	40.0	41.0	42.0	48.3	26.0	153.0	1.5	1.0	1.5	2.0	2.0
	50	**50**	**2"**	30.0	52.0	52.0	53.0	54.0	60.3	32.0	173.0	1.5	1.0	1.5	2.0	2.0

Dimensions in mm
MG = diaphragm size

1) **Connection type**
Code 0: Spigot DIN
Code 16: Spigot DIN EN 10357 series B (2014 edition; formerly DIN 11850 series 1)
Code 17: Spigot EN 10357 series A/DIN 11866 series A, formerly DIN 11850 series 2
Code 18: Spigot DIN 11850 series 3
Code 60: Spigot ISO 1127/DIN EN 10357 series C (2014 edition)/DIN 11866 series B

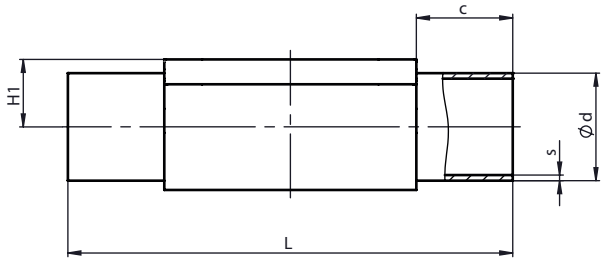

Connection type spigot DIN/EN/ISO (code 0, 17, 60) [1], investment casting material (code C3)

Type	MG	DN	NPS	c (min)	ød			H1	L	s		
					Connection type					Connection type		
					0	17	60			0	17	60
GEMÜ 601, 602	**8**	**4**	**-**	20.0	6.0	-	-	8.5	72.0	1.0	-	-
		6	**-**	20.0	-	8.0	-	8.5	72.0	-	1.0	-
		8	**1/4"**	20.0	-	10.0	13.5	8.5	72.0	-	1.0	1.6
		10	**3/8"**	20.0	-	13.0	-	8.5	72.0	-	1.5	-
GEMÜ 612	**10**	**10**	**3/8"**	25.0	-	13.0	17.2	12.5	108.0	-	1.5	1.6
		15	**1/2"**	25.0	-	19.0	21.3	12.5	108.0	-	1.5	1.6
GEMÜ 673	**25**	**15**	**1/2"**	25.0	-	19.0	21.3	13.0	120.0	-	1.5	1.6
		20	**3/4"**	25.0	-	23.0	26.9	16.0	120.0	-	1.5	1.6
		25	**1"**	25.0	-	29.0	33.7	19.0	120.0	-	1.5	2.0
	40	**32**	**1¼"**	25.0	-	35.0	42.4	24.0	153.0	-	1.5	2.0
		40	**1½"**	30.5	-	41.0	48.3	26.0	153.0	-	1.5	2.0
	50	**50**	**2"**	30.0	-	53.0	60.3	32.0	173.0	-	1.5	2.0

Dimensions in mm
MG = diaphragm size

1) **Connection type**
Code 0: Spigot DIN
Code 17: Spigot EN 10357 series A/DIN 11866 series A, formerly DIN 11850 series 2
Code 60: Spigot ISO 1127/DIN EN 10357 series C (2014 edition)/DIN 11866 series B

See also

- Spigot JIS/SMS (code 35, 36, 37) [▸ 29]
- Spigot DIN/EN/ISO (code 0, 16, 17, 18, 60) [▸ 26]

Spigot ASME/BS (code 55, 59, 63, 64, 65)

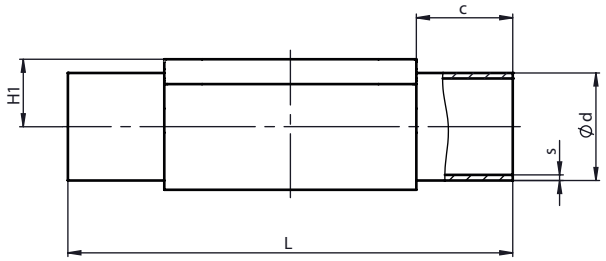

Connection type spigot ASME/BS (code 55, 59, 63, 64, 65) [1], forged material (code 40, 42, F4)

Type	MG	DN	NPS	c (min)	ød					H1	L	s				
					Connection type							Connection type				
					55	59	63	64	65			55	59	63	64	65
GEMÜ 601, 602	**8**	**6**	**-**	20.0	-	-	10.3	-	10.3	8.5	72.0	-	-	1.24	-	1.73
		8	**1/4"**	20.0	6.35	6.35	13.7	-	13.7	8.5	72.0	1.2	0.89	1.65	-	2.24
		10	**3/8"**	20.0	9.53	9.53	-	-	-	8.5	72.0	1.2	0.89	-	-	-
		15	**1/2"**	20.0	12.70	12.70	-	-	-	8.5	72.0	1.2	1.65	-	-	-
GEMÜ 612	**10**	**10**	**3/8"**	25.0	9.53	9.53	17.1	-	17.1	12.5	108.0	1.2	0.89	1.65	-	2.31
		15	**1/2"**	25.0	12.70	12.70	21.3	21.3	21.3	12.5	108.0	1.2	1.65	2.11	1.65	2.77
		20	**3/4"**	25.0	19.05	19.05	-	-	-	12.5	108.0	1.2	1.65	-	-	-
GEMÜ 673	**25**	**15**	**1/2"**	25.0	-	-	21.3	21.3	21.3	19.0	120.0	-	-	2.11	1.65	2.77
		20	**3/4"**	25.0	19.05	19.05	26.7	26.7	26.7	19.0	120.0	1.2	1.65	2.11	1.65	2.87
		25	**1"**	25.0	-	25.40	33.4	33.4	33.4	19.0	120.0	-	1.65	2.77	1.65	3.38
	40	**32**	**1¼"**	25.0	-	-	42.2	42.2	42.2	26.0	153.0	-	-	2.77	1.65	3.56
		40	**1½"**	30.5	-	38.10	48.3	48.3	48.3	26.0	153.0	-	1.65	2.77	1.65	3.68
	50	**50**	**2"**	30.0	-	50.80	60.3	60.3	60.3	32.0	173.0	-	1.65	2.77	1.65	3.91
		65	**2½"**	30.0	-	63.50	-	-	-	34.0	173.0	-	1.65	-	-	-

Dimensions in mm
MG = diaphragm size

1) **Connection type**
Code 55: Spigot BS 4825, Part 1
Code 59: Spigot ASME BPE/DIN EN 10357 series C (from 2022 edition)/DIN 11866 series C
Code 63: Spigot ANSI/ASME B36.19M schedule 10s
Code 64: Spigot ANSI/ASME B36.19M schedule 5s
Code 65: Spigot ANSI/ASME B36.19M schedule 40s

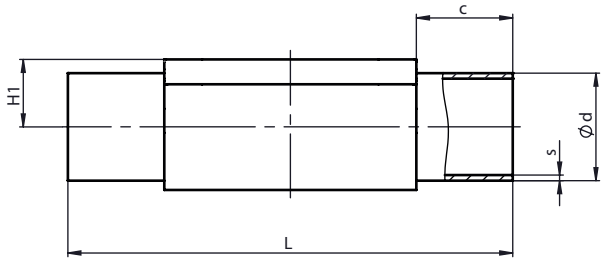

Connection type spigot ASME BPE (code 59) [1], investment casting material (code C3) [2]

Type	MG	DN	NPS	c (min)	ød	H1	L	s
GEMÜ 601, 602	**8**	**8**	**1/4"**	20.0	6.35	8.5	72.0	0.89
		10	**3/8"**	20.0	9.53	8.5	72.0	0.89
		15	**1/2"**	20.0	12.70	8.5	72.0	1.65
GEMÜ 612	**10**	**20**	**3/4"**	25.0	19.05	12.5	108.0	1.65
GEMÜ 673	**25**	**20**	**3/4"**	25.0	19.05	16.0	120.0	1.65
		25	**1"**	25.0	25.40	19.0	120.0	1.65
	40	**40**	**1½"**	30.5	38.10	26.0	153.0	1.65
	50	**50**	**2"**	30.0	50.80	32.0	173.0	1.65

Dimensions in mm
MG = diaphragm size

1) **Connection type**
Code 59: Spigot ASME BPE/DIN EN 10357 series C (from 2022 edition)/DIN 11866 series C

2) **Valve body material**
Code C3: 1.4435, investment casting

See also

Spigot ASME/BS (code 55, 59, 63, 64, 65) [▸ 27]

Spigot JIS/SMS (code 35, 36, 37)

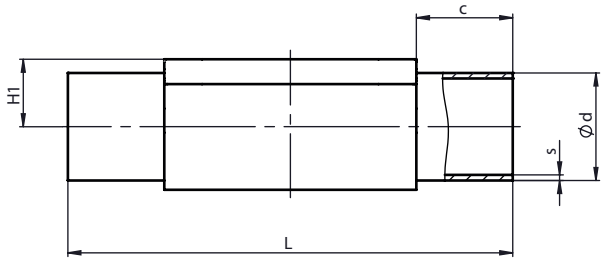

Connection type spigot JIS/SMS (code 35, 36, 37) [1], forged material (code 40, 42, F4)

Type	MG	DN	NPS	c (min)	ød			H1	L	s		
					Connection type					Connection type		
					35	36	37			35	36	37
GEMÜ 601, 602	**8**	**6**	**-**	20.0	-	10.5	-	8.5	72.0	-	1.20	-
		8	**1/4"**	20.0	-	13.8	-	8.5	72.0	-	1.65	-
GEMÜ 612	**10**	**10**	**3/8"**	25.0	-	17.3	-	12.5	108.0	-	1.65	-
		15	**1/2"**	25.0	-	21.7	-	12.5	108.0	-	2.10	-
GEMÜ 673	**25**	**15**	**1/2"**	25.0	-	21.7	-	19.0	120.0	-	2.10	-
		20	**3/4"**	25.0	-	27.2	-	19.0	120.0	-	2.10	-
		25	**1"**	25.0	25.4	34.0	25.0	19.0	120.0	1.2	2.80	1.2
	40	**32**	**1¼"**	25.0	31.8	42.7	33.7	26.0	153.0	1.2	2.80	1.2
		40	**1½"**	30.5	38.1	48.6	38.0	26.0	153.0	1.2	2.80	1.2
	50	**50**	**2"**	30.0	50.8	60.5	51.0	32.0	173.0	1.5	2.80	1.2
		65	**2½"**	30.0	63.5	-	63.5	34.0	173.0	2.0	-	1.6

Connection type spigot SMS (code 37), investment casting material (code C3)

Type	MG	DN	NPS	c (min)	ød	H1	L	s
GEMÜ 673	**25**	**25**	**1"**	25.0	25.0	19.0	120.0	1.2
	40	**40**	**1½"**	30.5	38.0	26.0	153.0	1.2
	50	**50**	**2"**	30.0	51.0	32.0	173.0	1.2

Dimensions in mm
MG = diaphragm size

1) **Connection type**
Code 35: Spigot JIS-G 3447
Code 36: Spigot JIS-G 3459 schedule 10s
Code 37: Spigot SMS 3008

See also

- Spigot JIS/SMS (code 35, 36, 37) [▸ 29]
- Spigot JIS/SMS (code 35, 36, 37) [▸ 29]

Threaded socket DIN (code 1)

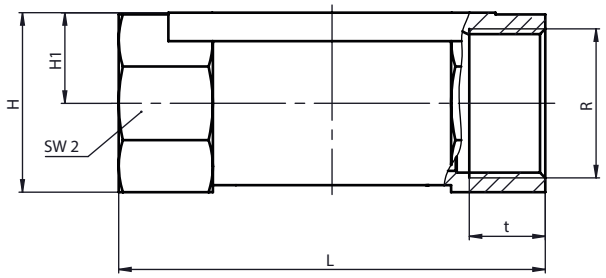

Connection type threaded socket (code 1) [1], investment casting material (code 37) [2], body configuration D

MG	DN	NPS	H	H1	L	n	R	SW 2	t
8	**8**	**1/4"**	19.0	9.0	72.0	6	G 1/4	18.0	11.0
10	**15**	**1/2"**	30.0	15.0	68.0	2	G 1/2	27.0	15.0
25	**15**	**1/2"**	28.3	14.8	85.0	6	G 1/2	27.0	15.0
	20	**3/4"**	33.3	17.3	85.0	6	G 3/4	32.0	16.0
	25	**1"**	42.3	21.8	110.0	6	G 1	41.0	19.0
40	**32**	**1¼"**	51.3	26.3	120.0	8	G 1¼	50.0	20.0
	40	**1½"**	56.3	28.8	140.0	8	G 1½	55.0	18.0
50	**50**	**2"**	71.3	36.0	165.0	8	G 2	70.0	26.0

Dimensions in mm
MG = diaphragm size
n = number of flats

1) **Connection type**
Code 1: Threaded socket DIN ISO 228

2) **Valve body material**
Code 37: 1.4408, investment casting

Threaded socket DIN (code 1, 1L)

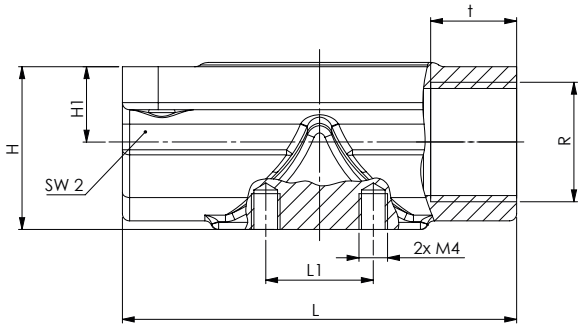

Connection type threaded socket (code 1) [1], investment casting material (code 37) [2]

Type	MG	DN	NPS	H	H1	L	n	R	SW 2	t	N
GEMÜ 601, 602	**8**	**8**	**1/4"**	19.0	9.0	72.0	6	G 1/4	18.0	11.0	-
GEMÜ 612	**10**	**12**	**3/8"**	23.0	10.5	55.0	2	G 3/8	28	12	2
		15	**1/2"**	30.0	15.0	68.0	2	G 1/2	27	15	-
GEMÜ 687	**25**	**15**	**1/2"**	28.3	14.8	85.0	6	G 1/2	27.0	15.0	-
		20	**3/4"**	33.3	17.3	85.0	6	G 3/4	32.0	16.0	-
		25	**1"**	42.3	21.8	110.0	6	G 1	41.0	13.0	-
	40	**32**	**1¼"**	51.3	26.3	120.0	8	G 1¼	50.0	20.0	-
		40	**1½"**	56.3	28.8	140.0	8	G 1½	55.0	18.0	-
	50	**50**	**2"**	71.3	36.0	165.0	8	G 2	70.0	26.0	-

Connection type threaded socket (code 1L) [1], investment casting material (code 37) [2]

Type	MG	DN	NPS	H	H1	L	n	R	SW 2	t	N
GEMÜ 612	**10**	**15**	**1/2"**	28.1	13.0	75.0	2	G 1/2	32	15	2

Dimensions in mm
MG = diaphragm size
n = number of flats

1) **Connection type**
Code 1: Threaded socket DIN ISO 228
Code 1L: Threaded socket DIN ISO 228 body length (FTF): 75 mm

2) **Valve body material**
Code 37: 1.4408, investment casting

Threaded spigot DIN (code 6)

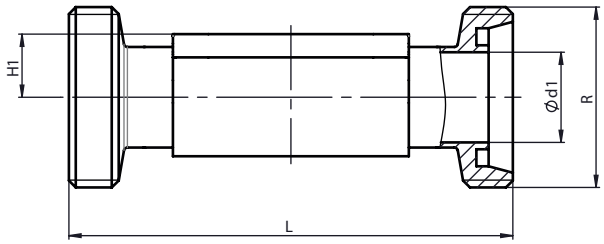

Connection type threaded spigot DIN (code 6) [1], forged material (code 40, 42)

Type	MG	DN	NPS	ød1	H1	L	R
GEMÜ 601, 602	**8**	**10**	**3/8"**	10.0	8.5	92.0	Rd 28 x 1/8
GEMÜ 612	**10**	**10**	**3/8"**	10.0	12.5	118.0	Rd 28 x 1/8
		15	**1/2"**	16.0	12.5	118.0	Rd 34 x 1/8
GEMÜ 673	**25**	**15**	**1/2"**	16.0	19.0	118.0	Rd 34 x 1/8
		20	**3/4"**	20.0	19.0	118.0	Rd 44 x 1/6
		25	**1"**	26.0	19.0	128.0	Rd 52 x 1/6
	40	**32**	**1¼"**	32.0	26.0	147.0	Rd 58 x 1/6
		40	**1½"**	38.0	26.0	160.0	Rd 65 x 1/6
	50	**50**	**2"**	50.0	32.0	191.0	Rd 78 x 1/6

Dimensions in mm
MG = diaphragm size

1) **Connection type**
Code 6: Threaded spigot DIN 11851

See also

Threaded spigot DIN (code 6) [▸ 32]

Cone spigot DIN (code 6K)

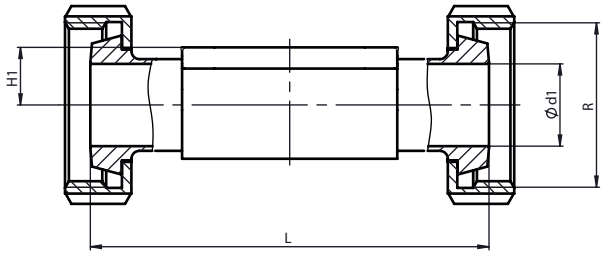

Connection type cone spigot DIN (code 6K) [1], forged material (code 40, 42)

	MG	DN	NPS	ød1	H1	L	R
GEMÜ 601, 602	**8**	**10**	**3/8"**	10.0	8.5	90.0	Rd 28 x 1/8
GEMÜ 612	**10**	**10**	**3/8"**	10.0	12.5	116.0	Rd 28 x 1/8
		15	**1/2"**	16.0	12.5	116.0	Rd 34 x 1/8
GEMÜ 673	**25**	**15**	**1/2"**	16.0	19.0	116.0	Rd 34 x 1/8
		20	**3/4"**	20.0	19.0	114.0	Rd 44 x 1/6
		25	**1"**	26.0	19.0	127.0	Rd 52 x 1/6
	40	**32**	**1¼"**	32.0	26.0	147.0	Rd 58 x 1/6
		40	**1½"**	38.0	26.0	160.0	Rd 65 x 1/6
	50	**50**	**2"**	50.0	32.0	191.0	Rd 78 x 1/6

Dimensions in mm
MG = diaphragm size

1) **Connection type**
Code 6K: Cone spigot and union nut DIN 11851

See also

Cone spigot DIN (code 6K) [▸ 33]

Flange EN (code 8)

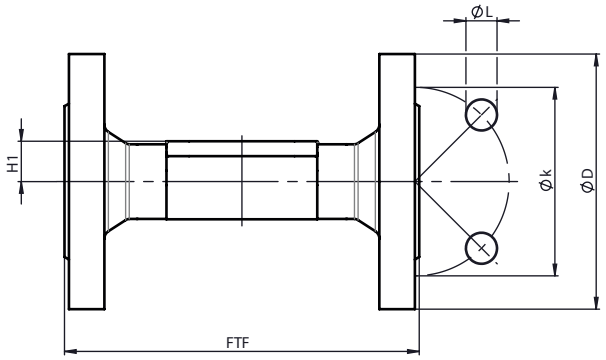

Connection type flange, length EN 558 (code 8) [1]**, SG iron material (code 17, 18), investment casting material (code 39, C3), forged material (code 40, 42)**

	MG	DN	NPS	øD	øk	øL	n	FTF		H1		
								Material		Material		
								17, 18, 39	C3, 40, 42	17, 18, 39	C3	40, 42
GEMÜ 673	**25**	**15**	**1/2"**	95.0	65.0	14.0	4	130.0	150.0	18.0	13.0	19.0
		20	**3/4"**	105.0	75.0	14.0	4	150.0	150.0	20.5	16.0	19.0
		25	**1"**	115.0	85.0	14.0	4	160.0	160.0	23.0	19.0	19.0
	40	**32**	**1¼"**	140.0	100.0	18.0	4	180.0	180.0	28.7	24.0	26.0
		40	**1½"**	150.0	110.0	18.0	4	200.0	200.0	33.0	26.0	26.0
	50	**50**	**2"**	165.0	125.0	18.0	4	230.0	230.0	39.0	32.0	32.0
		65	**2½"**	185.0	145.0	18.0	4	290.0	-	51.0	-	-

Dimensions in mm
MG = diaphragm size

1) **Connection type**
Code 8: Flange EN 1092, PN 16, form B, face-to-face dimension FTF EN 558 series 1, ISO 5752, basic series 1, length only for body configuration D

See also

Flange EN (code 8) [▸ 34]

Flange JIS (code 34)

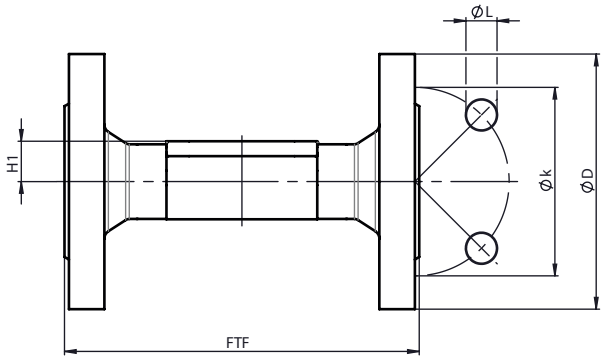

Connection type flange, length 558 (code 34) [1], investment casting material (code 39) [2]

	MG	DN	NPS	øD	FTF	H1	øk	øL	n
GEMÜ 673	**25**	**15**	**1/2"**	95.0	130.0	18.0	70.0	15.0	4
		20	**3/4"**	100.0	150.0	20.5	75.0	15.0	4
		25	**1"**	125.0	160.0	23.0	90.0	19.0	4
	40	**32**	**1¼**	135.0	180.0	28.7	100.0	19.0	4
		40	**1½"**	140.0	200.0	33.0	105.0	19.0	4
	50	**50**	**2"**	155.0	230.0	39.0	120.0	19.0	4

Dimensions in mm
MG = diaphragm size

1) **Connection type**
Code 34: Flange JIS B2220, 10K, RF, face-to-face dimension FTF EN 558 series 1, ISO 5752, basic series 1, length only for body configuration D

2) **Valve body material**
Code 39: 1.4408, PFA lined

Flange ANSI Class (code 38, 39)

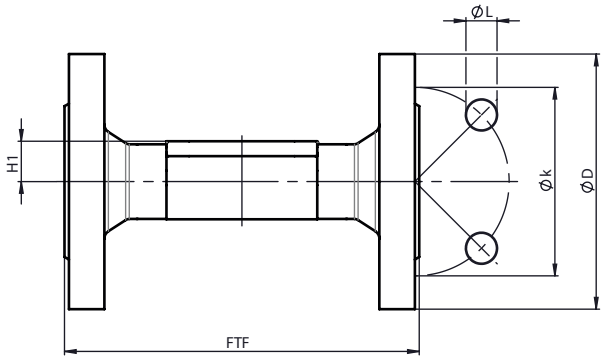

Connection type flange, length MSS SP-88 (code 38) [1], SG iron material (code 17, 18), investment casting material (code 39) [2]

	MG	DN	NPS	øD	FTF	H1	øk	øL	n
GEMÜ 673	**25**	**20**	**3/4"**	100.0	146.0	20.5	69.9	15.9	4
		25	**1"**	110.0	146.0	23.0	79.4	15.9	4
	40	**40**	**1½"**	125.0	175.0	33.0	98.4	15.9	4
	50	**50**	**2"**	150.0	200.0	39.0	120.7	19.0	4
		65	**2½"**	180.0	226.0	51.0	139.7	19.0	4

Dimensions in mm
MG = diaphragm size
n = number of bolts

1) **Connection type**
Code 38: Flange ANSI Class 150 RF, face-to-face dimension FTF MSS SP-88, length only for body configuration D

2) **Valve body material**
Code 17: EN-GJS-400-18-LT (GGG 40.3), PFA lined
Code 18: EN-GJS-400-18-LT (GGG 40.3), PP lined
Code 39: 1.4408, PFA lined

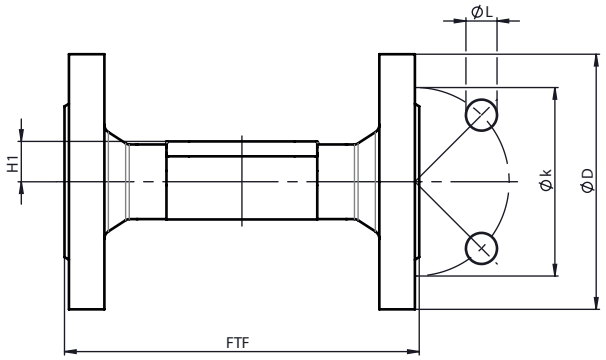

Connection type flange, length EN 558 (code 39) [1], SG iron material (code 17, 18), investment casting material (code 39, C3), forged material (code 40, 42)

	MG	DN	NPS	øD	FTF		H1			øk	øL	n
					Material		Material					
					17, 18, 39	C3, 40, 42	17, 18, 39	C3	40, 42			
GEMÜ 673	**25**	**15**	**1/2"**	90.0	130.0	150.0	-	13.0	19.0	60.3	15.9	4
		20	**3/4"**	100.0	150.0	150.0	20.5	16.0	19.0	69.9	15.9	4
		25	**1"**	110.0	160.0	160.0	23.0	19.0	19.0	79.4	15.9	4
	40	**32**	**1¼"**	115.0	180.0	180.0	28.7	24.0	26.0	88.9	15.9	4
		40	**1½"**	125.0	200.0	200.0	33.0	26.0	26.0	98.4	15.9	4
	50	**50**	**2"**	150.0	230.0	230.0	39.0	32.0	32.0	120.7	19.0	4
		65	**2½"**	180.0	290.0	-	51.0	-	-	139.7	19.0	4

Dimensions in mm
MG = diaphragm size

1) **Connection type**
Code 39: Flange ANSI Class 125/150 RF, face-to-face dimension FTF EN 558 series 1, ISO 5752, basic series 1, length only for body configuration D

See also

Flange ANSI Class (code 38, 39) [▸ 37]

Clamp (code 80, 82, 84, 86, 88, 8A, 8E, 8F, 8H, 8P, 8T)

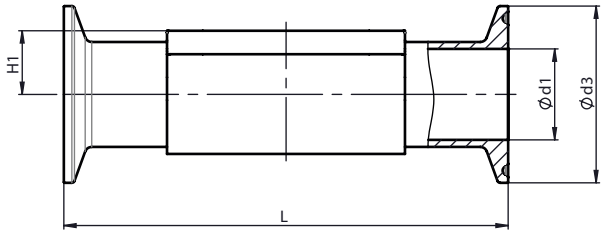

Connection type clamp DIN/ASME (code 80, 88, 8P, 8T) [1], forged material (code 40, 42, F4)

Type	MG	DN	NPS	ød1		ød3		H1	L	
				Connection type		Connection type			Connection type	
				80, 8P	88, 8T	80, 8P	88, 8T		80, 8P	88, 8T
GEMÜ 601, 602	**8**	**8**	**1/4"**	4.57	-	25.0	-	8.5	63.5	-
		10	**3/8"**	7.75	-	25.0	-	8.5	63.5	-
		15	**1/2"**	9.40	9.40	25.0	25.0	8.5	63.5	108.0
GEMÜ 612	**10**	**10**	**3/8"**	7.75	-	25.0	-	12.5	88.9	-
		15	**1/2"**	9.40	9.40	25.0	25.0	12.5	88.9	108.0
		20	**3/4"**	15.75	15.75	25.0	25.0	12.5	101.6	117.0
GEMÜ 673	**25**	**20**	**3/4"**	15.75	15.75	25.0	25.0	19.0	101.6	117.0
		25	**1"**	22.10	22.10	50.5	50.5	19.0	114.3	127.0
	40	**40**	**1½"**	34.80	34.80	50.5	50.5	26.0	139.7	159.0
	50	**50**	**2"**	47.50	47.50	64.0	64.0	32.0	158.8	190.0
		65	**2½"**	60.20	60.20	77.5	77.5	34.0	193.8	216.0

Dimensions in mm
MG = diaphragm size

1) **Connection type**
Code 80: Clamp ASME BPE, face-to-face dimension FTF ASME BPE, length only for body configurations D & F
Code 88: Clamp ASME BPE, for pipe ASME BPE, face-to-face dimension FTF EN 558 series 7, length only for body configurations D & F
Code 8P: Clamp DIN 32676 series C, face-to-face dimension FTF ASME BPE, length only for body configurations D & F
Code 8T: Clamp DIN 32676 series C, face-to-face dimension FTF EN 558 series 7, length only for body configurations D & F

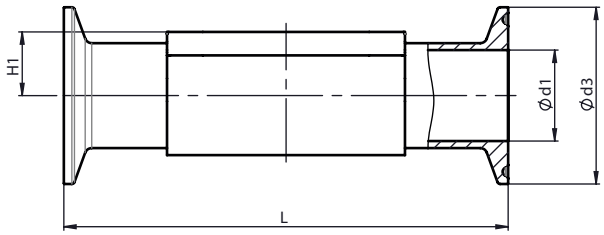

Connection type clamp DIN/ISO (code 82, 86, 8A, 8E) [1], forged material (code 40, 42, F4)

Type	MG	DN	NPS	ød1				ød3				H1	L			
				Connection type				Connection type					Connection type			
				82	86	8A	8E	82	86	8A	8E		82	86	8A	8E
GEMÜ 601, 602	**8**	**6**	**1/8"**	7.0	-	6.0	-	25.0	-	25.0	-	8.5	63.5	-	63.5	-
		8	**1/4"**	10.3	-	8.0	-	25.0	-	25.0	-	8.5	63.5	-	63.5	-
		10	**3/8"**	-	10.0	10.0	-	-	34.0	34.0	-	8.5	-	115.0	88.9	-
GEMÜ 612	**10**	**10**	**3/8"**	14.0	10.0	10.0	-	25.0	34.0	34.0	-	12.5	108.0	151.0	108.0	-
		15	**1/2"**	18.1	16.0	16.0	-	50.5	34.0	34.0	-	12.5	108.0	151.0	108.0	-
GEMÜ 673	**25**	**15**	**1/2"**	18.1	16.0	16.0	-	50.5	34.0	34.0	-	19.0	108.0	165.0	108.0	-
		20	**3/4"**	23.7	20.0	20.0	-	50.5	34.0	34.0	-	19.0	117.0	165.0	117.0	-
		25	**1"**	29.7	26.0	26.0	22.6	50.5	50.5	50.5	50.5	19.0	1270	165.0	127.0	127.0
	40	**32**	**1¼"**	38.4	32.0	32.0	31.3	64.0	50.5	50.5	50.5	26.0	146.0	198.0	146.0	146.0
		40	**1½"**	44.3	38.0	38.0	35.6	64.0	50.5	50.5	50.5	26.0	159.0	198.0	159.0	159.0
	50	**50**	**2"**	56.3	50.0	50.0	48.6	77.5	64.0	64.0	64.0	32.0	190.0	218.0	190.0	190.0
		65	**2½"**	-	-	-	60.3	-	-	-	77.5	34.0	-	-	-	216.0

Dimensions in mm
MG = diaphragm size

1) **Connection type**
Code 82: Clamp DIN 32676 series B, face-to-face dimension FTF EN 558 series 7, length only for body configuration D
Code 86: Clamp DIN 32676 series A
Code 8A: Clamp DIN 32676 series A, face-to-face dimension FTF acc. to EN 558 series 7, length only for body configuration D
Code 8E: Clamp ISO 2852 for pipe ISO 2037, clamp SMS 3017 for pipe SMS 3008, face-to-face dimension FTF EN 558 series 7, length only for body configuration D

Connection type clamp BS/JIS (code 84, 8F, 8H) [1], forged material (code 40, 42, F4)

MG	DN	NPS	ød1			ød3			H1	L		
			Connection type							Connection type		
			84	8F	8H	84	8F	8H		84	8F	8H
8	**8**	**1/4"**	-	-	10.5	-	-	34.0	8.5	-	-	88.9
	10	**3/8"**	-	-	-	-	-	-	-	-	-	-
	15	**1/2"**	10.3	-	-	25.0	-	-	8.5	108.0	-	-
10	**10**	**3/8"**	-	-	14.0	-	-	34.0	12.5	-	-	108.0
	15	**1/2"**	10.3	-	17.5	25.0	-	34.0	12.5	108.0	-	108.0
	20	**3/4"**	16.7	-	-	25.0	-	-	12.5	117.0	-	-
25	**15**	**1/2"**	10.3	-	17.5	25.0	-	34.0	19.0	108.0	-	108.0
	20	**3/4"**	16.7	-	-	25.0	-	-	19.0	117.0	-	-
	25	**1"**	-	23.0	-	-	50.5	-	19.0	-	127.0	-
40	**32**	**1 1/4"**	-	29.4	-	-	50.5	-	26.0	-	146.0	-
	40	**1 1/2"**	-	35.7	-	-	50.5	-	26.0	-	159.0	-
50	**50**	**2"**	-	47.8	-	-	64.0	-	32.0	-	190.0	-
	65	**2 1/2"**	-	59.5	-	-	77.5	-	34.0	-	216.0	-

Dimensions in mm
MG = diaphragm size

1) **Connection type**
Code 84: Clamp for pipe BS 4825 Part 1, DN 15 and DN 20, clamp OD 25.0 mm, face-to-face dimension FTF acc. to EN 558 series 7, length only for body configuration D
Code 8F: Clamp IDF/ISO for pipe JIS-G 3447, face-to-face dimension FTF EN 558 series 7, length only for body configuration D
Code 8H: Clamp IDF/ISO for pipe JIS-G 3459, face-to-face dimension FTF EN 558 series 7, length only for body configuration D

See also

- Clamp (code 80, 82, 84, 86, 88, 8A, 8E, 8F, 8H, 8P, 8T) [38]
- Clamp (code 80, 82, 84, 86, 88, 8A, 8E, 8F, 8H, 8P, 8T) [40]
- Clamp (code 80, 82, 84, 86, 88, 8A, 8E, 8F, 8H, 8P, 8T) [40]

Union nut with female and male thread (code FV, MV)

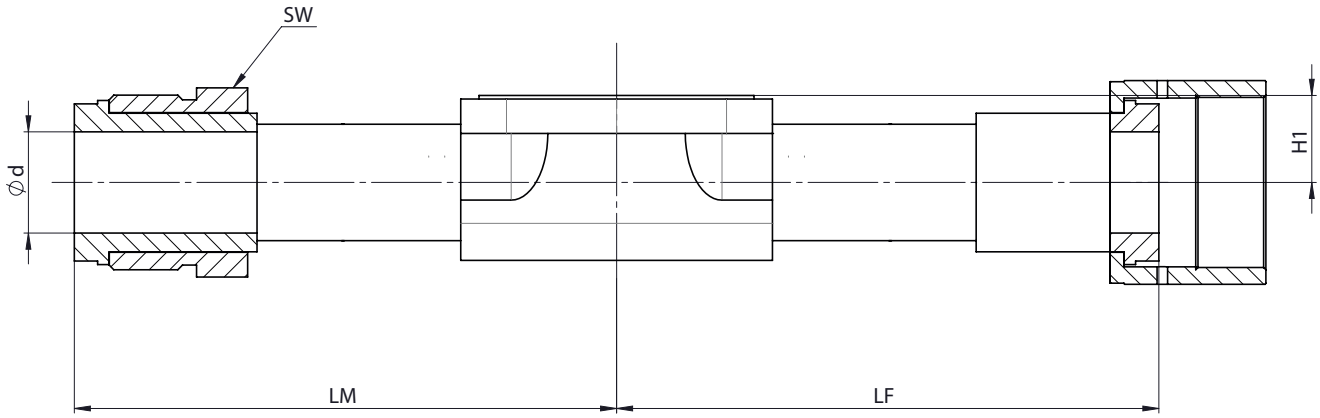

Connection type union nut with female thread (code FV)

MG	DN	NPS	Ød	H1	LF	SW
8	**8**	1/4"	4.6	8.5	40.9	3/4"
	10	3/8"	7.8	8.5	51.0	1 1/16"
	15	1/2"	10.3	8.5	41.4	1 1/16"
10	**10**	3/8"	7.8	12.5	62.5	1 1/16"
	15	1/2"	10.3	12.5	52.9	1 1/16"
	20	3/4"	16.7	12.5	85.7	1 1/2"
25	**20**	3/4"	16.7	19.0	92.2	1 1/2"
	25	1"	22.1	19.0	99.3	1 3/4"

Connection type union nut with male thread (code MV)

MG	DN	NPS	Ød	H1	LM	SW
8	**8**	1/4"	4.6	8.5	55.9	5/8"
	10	3/8"	7.8	8.5	68.1	15/16"
	15	1/2"	10.3	8.5	58.4	15/16"
10	**10**	3/8"	7.8	12.5	79.6	15/16"
	15	1/2"	10.3	12.5	69.9	15/16"
	20	3/4"	16.7	12.5	85.7	1 5/16"
25	**20**	3/4"	16.7	19.0	92.2	1 5/16"
	25	1"	22.1	19.0	99.3	1 5/8"

Dimensions in mm

See also

Aseptic union DIN [▸ 44]

Aseptic connections

Aseptic union DIN

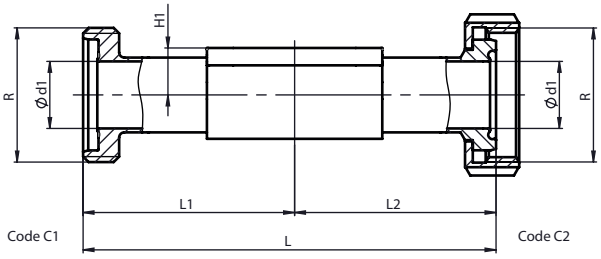

Aseptic union end DIN, series A (code C1, C2) [1], forged body (code 40, 42, F4), block material (code 44, A3), body configuration D

MG	DN	H1	Ød1	Thread	Connection type (code)			
					C1		C2	
				R	L	L1, L2	L	L1, L2
8	**10**	8.5	10.0	RD 28 x 1/8	88.0	44.0	84.0	42.0
10	**10**	12.5	10.0	RD 28 x 1/8	120.0	60.0	116.0	58.0
	15	12.5	16.0	RD 34 x 1/8	120.0	60.0	116.0	58.0
25	**15**	19.0	16.0	RD 34 x 1/8	120.0	60.0	116.0	58.0
	20	19.0	20.0	RD 44 x 1/6	144.0	72.0	138.0	69.0
	25	19.0	26.0	RD 52 x 1/6	164.0	82.0	156.0	78.0
40	**32**	26.0	32.0	RD 58 x 1/6	192.0	96.0	182.0	91.0
	40	26.0	38.0	RD 65 x 1/6	214.0	107.0	204.0	102.0
50	**50**	32.0	50.0	RD 78 x 1/6	244.0	122.0	242.0	121.0
80	**65**	62.0	66.0	RD 95 x 1/6	314.0	157.0	310.0	155.0
	80	62.0	81.0	RD 110 x 1/4	342.0	171.0	334.0	167.0
100	**100**	76.0	100.0	RD 130 x 1/4	398.0	199.0	390.0	195.0

MG = diaphragm size
Dimensions in mm

1) **Connection type**
Code C1: Aseptic threaded spigot DIN 11864-GS, for pipe DIN 11866 Series A and EN 10357 Series A
Code C2: Aseptic union nipple with groove cap nut DIN 11864-BS, for pipe DIN 11866 Series A and EN 10357 Series A

Material code F4 only up to MG 50, from MG 80 material code 44.

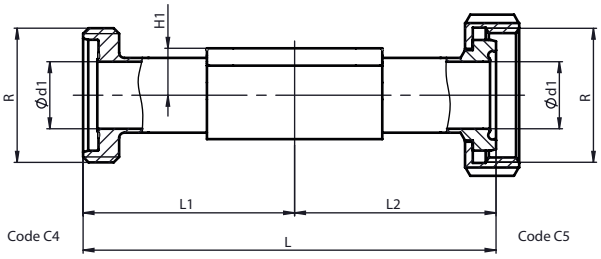

Aseptic union end DIN, series B (code C4, C5) [1], forged body (code 40, 42, F4), block material (code 44, A3), body configuration D

MG	DN	H1	Ød1	Thread	Connection type (code)			
					C4		C5	
				R	L	L1, L2	L	L1, L2
8	**8**	8.5	10.3	RD 28 x 1/8	88.0	44.0	84.0	42.0
10	**10**	12.5	14.0	RD 34 x 1/8	120.0	60.0	116.0	58.0
	15	12.5	18.1	RD 44 x 1/6	120.0	60.0	116.0	58.0
25	**15**	19.0	18.1	RD 44 x 1/6	120.0	60.0	116.0	58.0
	20	19.0	23.7	RD 52 x 1/6	144.0	72.0	138.0	69.0
	25	19.0	29.7	RD 58 x 1/6	164.0	82.0	156.0	78.0
40	**32**	26.0	38.4	RD 65 x 1/6	192.0	96.0	182.0	91.0
	40	26.0	44.3	RD 78 x 1/6	214.0	107.0	204.0	102.0
50	**50**	32.0	56.3	RD 95 x 1/6	244.0	122.0	242.0	121.0
80	**65**	62.0	72.1	RD 110 x 1/4	314.0	157.0	310.0	155.0
	80	62.0	84.3	RD 130 x 1/4	342.0	171.0	334.0	167.0

MG = diaphragm size
Dimensions in mm

1) **Connection type**
Code C4: Aseptic threaded spigot DIN 11864-GS, for pipe DIN 11866 series B and EN ISO 1127
Code C5: Aseptic union nipple with groove cap nut DIN 11864-BS, for pipe DIN 11866 series B and EN ISO 1127

Material code F4 only up to MG 50, from MG 80 material code 44.

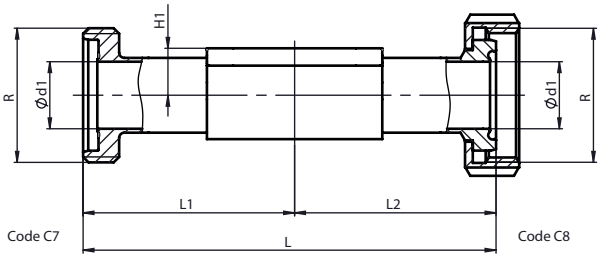

Aseptic union end DIN, series C (code C7, C8) [1], forged body (code 40, 42, F4), block material (code 44, A1, A3), body configuration D

MG	DN	H1	Ød1	Thread	Connection type (code)			
					C7		C8	
				R	L	L1, L2	L	L1, L2
8	**15**	8.5	9.4	RD 28 x 1/8	88.0	44.0	84.0	42.0
10	**15**	12.5	9.4	RD 28 x 1/8	120.0	60.0	116.0	58.0
	20	12.5	15.75	RD 34 x 1/8	144.0	72.0	138.0	69.0
25	**15**	19.0	9.4	RD 28 x 1/8	120.0	60.0	116.0	60.0
	20	19.0	15.75	RD 34 x 1/8	144.0	72.0	138.0	69.0
	25	19.0	22.1	RD 52 x 1/6	164.0	82.0	156.0	78.0
40	**40**	26.0	34.8	RD 65 x 1/6	214.0	107.0	204.0	102.0
50	**50**	32.0	47.5	RD 78 x 1/6	244.0	122.0	242.0	121.0
	65	32.0	60.2	RD 95 x 1/6	314.0	157.0	310.0	155.0
80	**65**	62.0	60.2	RD 95 x 1/6	314.0	157.0	310.0	155.0
	80	62.0	72.9	RD 110 x 1/4	342.0	171.0	334.0	167.0
100	**100**	76.0	97.38	RD 130 x 1/4	398.0	199.0	390.0	195.0

MG = diaphragm size
Dimensions in mm

1) **Connection type**
Code C7: Aseptic threaded spigot DIN 11864-GS, for pipe DIN 11866 series C and ASME BPE
Code C8: Aseptic union nipple with groove cap nut DIN 11864-BS, for pipe DIN 11866 series C and ASME BPE

Material code F4 only up to MG 50, from MG 80 material code 44.

See also

- Aseptic union DIN [▸ 44]
- Aseptic union DIN [▸ 44]
- Aseptic union DIN [▸ 44]

Aseptic flange DIN

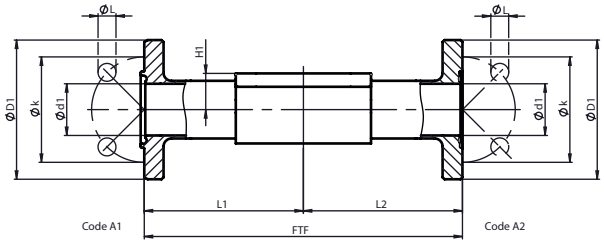

Aseptic flange DIN, series A (code A1, A2) [1], forged body (code 40, 42, F4), block material (code 44, A3), body configuration D

MG	DN	H1	Ød1	ØD1	Øk	ØL	Connection type (code)			
							A1		A2	
							FTF	L1, L2	FTF	L1, L2
8	**10**	8.5	10.0	54.0	37.0	4 x 9	100.0	50.0	100.0	50.0
10	**10**	12.5	10.0	54.0	37.0	4 x 9	130.0	65.0	130.0	65.0
	15	12.5	16.0	59.0	42.0	4 x 9	130.0	65.0	130.0	65.0
25	**15**	19.0	16.0	59.0	42.0	4 x 9	130.0	65.0	130.0	65.0
	20	19.0	20.0	64.0	47.0	4 x 9	150.0	75.0	150.0	75.0
	25	19.0	26.0	70.0	53.0	4 x 9	160.0	80.0	160.0	80.0
40	**32**	26.0	32.0	76.0	59.0	4 x 9	180.0	90.0	180.0	90.0
	40	26.0	38.0	82.0	65.0	4 x 9	200.0	100.0	200.0	100.0
50	**50**	32.0	50.0	94.0	77.0	4 x 9	230.0	115.0	230.0	115.0
80	**65**	62.0	66.0	113.0	95.0	8 x 9	290.0	145.0	290.0	145.0
	80	62.0	81.0	133.0	112.0	8 x 11	310.0	155.0	310.0	155.0
100	**100**	76.0	100.0	159.0	137.0	8 x 11	350.0	175.0	350.0	175.0

MG = diaphragm size
Dimensions in mm

1) **Connection type**
Code A1: Aseptic grooved flange DIN 11864-NF, for pipe DIN 11866 Series A and EN 10357 Series A, overall length FTF EN 558 Series 1, overall length only for housing form D
Code A2: Aseptic loose flange DIN 11864-BF, for pipe DIN 11866 Series A and EN 10357 Series A, overall length FTF EN 558 Series 1, overall length only for housing form D

Material code F4 only up to MG 50, from MG 80 material code 44.

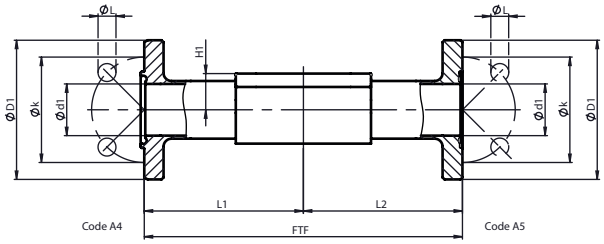

Aseptic flange DIN, series B (code A4, A5) [1], forged body (code 40, 42, F4), block material (code 44, A3), body configuration D

MG	DN	H1	Ød1	ØD1	Øk	ØL	Connection type (code)			
							A4		A5	
							FTF	L1, L2	FTF	L1, L2
8	**8**	8.5	10.3	54.0	37.0	4 x 9.0	100.0	50.0	100.0	50.0
10	**10**	12.5	14.0	59.0	42.0	4 x 9.0	130.0	65.0	130.0	65.0
	15	12.5	18.1	62.0	45.0	4 x 9.0	130.0	65.0	130.0	65.0
25	**15**	19.0	18.1	62.0	45.0	4 x 9.0	130.0	65.0	130.0	65.0
	20	19.0	23.7	69.0	52.0	4 x 9.0	150.0	75.0	150.0	75.0
	25	19.0	29.7	74.0	57.0	4 x 9.0	160.0	80.0	160.0	80.0
40	**32**	26.0	38.4	82.0	65.0	4 x 9.0	180.0	90.0	180.0	90.0
	40	26.0	44.3	88.0	71.0	4 x 9.0	200.0	100.0	200.0	100.0
50	**50**	32.0	56.3	103.0	85.0	4 x 9.0	230.0	115.0	230.0	115.0
80	**65**	62.0	72.1	125.0	104.0	8 X 11.0	290.0	145.0	290.0	145.0
	80	62.0	84.3	137.0	116.0	8 X 11.0	310.0	155.0	310.0	155.0
100	**100**	76.0	109.7	168.0	146.0	8 X 11.0	350.0	175.0	350.0	175.0

MG = diaphragm size
Dimensions in mm

1) **Connection type**
Code A4: Aseptic grooved flange DIN 11864-NF, for pipe DIN 11866 series B and EN ISO 1127, overall length FTF EN 558 series 1, overall length only for housing form D
Code A5: Aseptic loose flange DIN 11864-BF, for pipe DIN 11866 series B and EN ISO 1127 Overall length FTF EN 558 series 1, Overall length only for housing form D

Material code F4 only up to MG 50, from MG 80 material code 44.

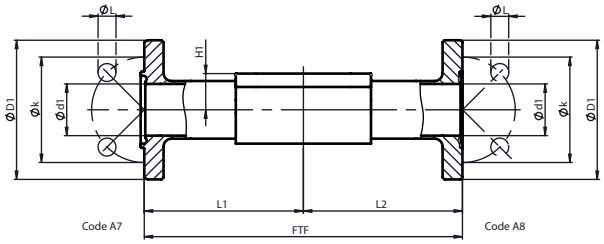

Aseptic flange DIN, series C (code A7, A8) [1], forged body (code 40, 42, F4), block material (code 44, A3), body configuration D

MG	DN	H1	Ød1	ØD1	Øk	ØL	Connection type (code)			
							A7		A8	
							FTF	L1, L2	FTF	L1, L2
8	**15**	8.5	9.4	54.0	37.0	4 x 9.0	100.0	50.0	100.0	50.0
10	**15**	12.5	9.4	54.0	37.0	4 x 9.0	130.0	65.0	130.0	65.0
	20	12.5	15.8	59.0	42.0	4 x 9.0	150.0	75.0	150.0	75.0
25	**15**	19.0	9.4	54.0	37.0	4 x 9.0	130.0	65.0	130.0	65.0
	20	19.0	15.8	59.0	42.0	4 x 9.0	150.0	75.0	150.0	75.0
	25	19.0	22.1	66.0	49.0	4 x 9.0	160.0	80.0	160.0	80.0
40	**40**	26.0	34.8	79.0	62.0	4 x 9.0	200.0	100.0	200.0	100.0
50	**50**	32.0	47.5	92.0	75.0	4 x 9.0	230.0	115.0	230.0	115.0
	65	32.0	60.2	107.0	89.0	8 x 9.0	290.0	145.0	290.0	145.0
80	**65**	62.0	60.2	107.0	89.0	8 x 9.0	290.0	145.0	290.0	145.0
	80	62.0	72.9	125.0	104.0	8 x 11.0	310.0	155.0	310.0	155.0
100	**100**	76.0	97.4	157.0	135.0	8 x 11.0	350.0	175.0	350.0	175.0

MG = diaphragm size
Dimensions in mm

1) **Connection type**
Code A7: Aseptic grooved flange DIN 11864-NF, for pipe DIN 11866 series C and ASME BPE, face-to-face dimension FTF EN 558 series 1, length only for body configurations D & F
Code A8: Aseptic loose flange DIN 11864-BF, for pipe DIN 11866 series C and ASME BPE, face-to-face dimension FTF EN 558 series 1, length only for body configurations D & F

Material code F4 only up to MG 50, from MG 80 material code 44.

See also

- Aseptic flange DIN [47]
- Aseptic flange DIN [47]
- Aseptic flange DIN [47]

Aseptic clamp DIN

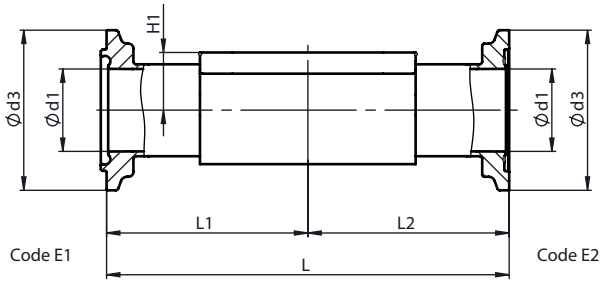

Aseptic clamp DIN, series A (code E1, E2) [1], forged body (code 40, 42, F4), block material (code 44, A3), body configuration D

MG	DN	H1	Ød1	Ød3	Connection type (code)			
					E1		E2	
					L	L1, L2	L	L1, L2
8	**10**	8.5	10.0	34.0	88.9	44.5	88.9	44.5
10	**10**	12.5	10.0	34.0	108.0	54.0	108.0	54.0
	15	12.5	16.0	34.0	108.0	54.0	108.0	54.0
25	**15**	19.0	16.0	34.0	108.0	54.0	108.0	54.0
	20	19.0	20.0	50.5	117.0	58.5	117.0	58.5
	25	19.0	26.0	50.5	127.0	63.5	127.0	63.5
40	**32**	26.0	32.0	50.5	146.0	73.0	146.0	73.0
	40	26.0	38.0	64.0	159.0	79.5	159.0	79.5
50	**50**	32.0	50.0	77.5	190.0	95.0	190.0	95.0
80	**65**	62.0	66.0	91.0	216.0	108.0	216.0	108.0
	80	62.0	81.0	106.0	254.0	127.0	254.0	127.0
100	**100**	76.0	100.0	130.0	305.0	152.5	305.0	152.5

MG = diaphragm size
Dimensions in mm

1) **Connection type**
Code E1: Aseptic grooved clamp DIN 11864-NKS, for pipe DIN 11866 series A and EN 10357 series A, overall length FTF EN 558 series 7, overall length only for housing form D
Code E2: Aseptic notched clamp DIN 11864-BKS, for pipe DIN 11866 series A and EN 10357 series A, overall length FTF EN 558 series 7, overall length only for housing form D

Material code F4 only up to MG 50, from MG 80 material code 44.

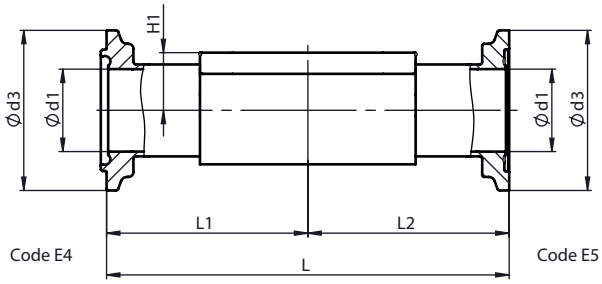

Aseptic clamp DIN, series B (code E4, E5) [1], forged body (code 40, 42, F4), block material (code 44, A3), body configuration D

MG	DN	H1	Ød1	Ød3	Connection type (code)			
					E4		E5	
					L	L1, L2	L	L1, L2
8	**8**	8.5	10.3	34.0	88.9	44.5	88.9	44.5
10	**10**	12.5	14.0	34.0	108.0	54.0	108.0	54.0
	15	12.5	18.1	34.0	108.0	54.0	108.0	54.0
25	**15**	19.0	18.1	34.0	108.0	54.0	108.0	54.0
	20	19.0	23.7	50.5	117.0	58.5	117.0	58.5
	25	19.0	29.7	50.5	127.0	63.5	127.0	63.5
40	**32**	26.0	38.4	64.0	146.0	73.0	146.0	73.0
	40	26.0	44.3	64.0	159.0	79.5	159.0	79.5
50	**50**	32.0	56.3	91.0	190.0	95.0	190.0	95.0
80	**65**	62.0	72.1	106.0	216.0	108.0	216.0	108.0
	80	62.0	84.3	130.0	254.0	127.0	254.0	127.0

MG = diaphragm size
Dimensions in mm

1) **Connection type**
Code E4: Grooved clamp DIN 11864-NKS, for pipe DIN 11866 series B and EN ISO 1127, overall length FTF EN 558 series 7, overall length only for housing form D
Code E5: Aseptic notched clamp DIN 11864-BKS, for pipe DIN 11866 series B and EN ISO 1127, overall length FTF EN 558 series 7, overall length only for housing form D

Material code F4 only up to MG 50, from MG 80 material code 44.

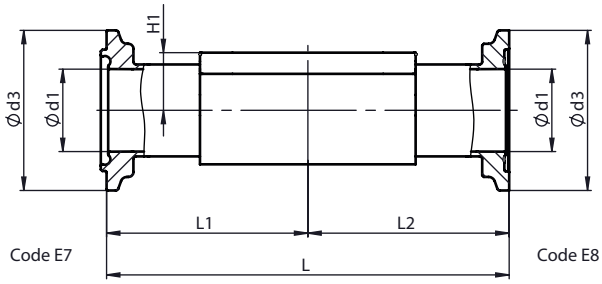

Aseptic clamp DIN, series C (code E7, E8) [1], forged body (code 40, 42, F4), block material (code 44, A3), body configuration D

MG	DN	H1	Ød1	Ød3	Connection type (code)			
					E7		E8	
					L	L1, L2	L	L1, L2
8	**15**	8.5	9.4	34.0	88.9	44.5	88.9	44.5
10	**15**	12.5	9.4	34.0	108.0	54.0	108.0	54.0
	20	12.5	15.8	34.0	108.0	54.0	108.0	54.0
25	**15**	19.0	9.4	34.0	108.0	54.0	108.0	54.0
	20	19.0	15.8	34.0	117.0	58.5	117.0	58.5
	25	19.0	22.1	50.5	127.0	63.5	127.0	63.5
40	**40**	26.0	34.8	64.0	159.0	79.5	159.0	79.5
50	**50**	32.0	47.5	77.5	190.0	95.0	190.0	95.0
	65	32.0	60.2	91.0	216.0	108.0	216.0	108.0
80	**65**	62.0	60.2	91.0	216.0	108.0	216.0	108.0
	80	62.0	72.9	106.0	254.0	127.0	254.0	127.0
100	**100**	76.0	97.38	130.0	305.0	152.5	305.0	152.5

MG = diaphragm size
Dimensions in mm

1) **Connection type**
Code E7: Aseptic grooved clamp DIN 11864-NKS, for pipe DIN 11866 series C/ASME BPE, face-to-face dimension FTF EN 558 series 7, length only for body configurations D & F
Code E8: Aseptic notched clamp DIN 11864-BKS, for pipe DIN 11866 series C/ASME BPE, face-to-face dimension FTF EN 558 series 7, length only for body configurations D & F

Material code F4 only up to MG 50, from MG 80 material code 44.

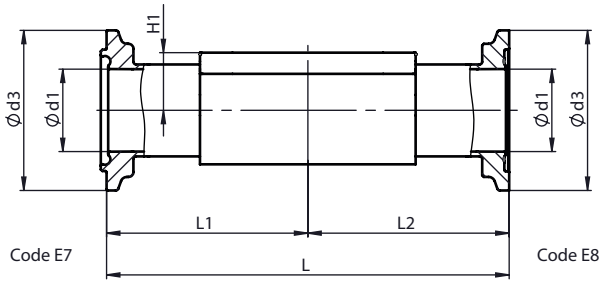

Aseptic clamp DIN, series C (code E7, E8) [1], forged body (code 40) [2], body configuration F

MG	DN	H1	Ød1	Ød3	Connection type (code)			
					E7		E8	
					L	L1, L2	L	L1, L2
80	**65**	43.0	60.2	91.0	216.0	108.0	216.0	108.0
	80	43.0	72.9	106.0	254.0	127.0	254.0	127.0
100	**100**	60.0	97.38	130.0	305.0	152.5	305.0	152.5

MG = diaphragm size
Dimensions in mm

1) **Connection type**
Code E7: Aseptic grooved clamp DIN 11864-NKS, for pipe DIN 11866 series C/ASME BPE, face-to-face dimension FTF EN 558 series 7, length only for body configurations D & F
Code E8: Aseptic notched clamp DIN 11864-BKS, for pipe DIN 11866 series C/ASME BPE, face-to-face dimension FTF EN 558 series 7, length only for body configurations D & F

2) **Valve body material**
Code 40: 1.4435 (F316L), forged body

See also

- Aseptic clamp DIN [▸ 51]
- Aseptic clamp DIN [▸ 51]
- Aseptic clamp DIN [▸ 51]

Subject to alteration | 10.2026 | 88318767

GEMÜ Gebr. Müller Apparatebau GmbH & Co. KG
Gert-Müller-Platz 1, 74635 Kupferzell, Germany
Phone +49 (0) 7940 1230 · info@gemue.de
www.gemu-group.com