GEMÜ 567 eSyDrive

Motorized control valve

EN **Operating instructions**

webcode: GW-567

All rights including copyrights or industrial property rights are expressly reserved.

Keep the document for future reference.

© GEMÜ Gebr. Müller Apparatebau GmbH & Co. KG
15.10.2026

Contents

1 General information 4
1.1 Information 4
1.2 Symbols used 4
1.3 Definition of terms 4
1.4 Warning notes 4
2 Safety information 5
3 Product description 6
4 Intended use 10
5 GEMÜ CONEXO 11
6 Order data - eSyDrive 12
7 Technical data 14
8 Dimensions 22
9 Manufacturer's information 43
9.1 Delivery 43
9.2 Packaging 43
9.3 Transport 43
9.4 Storage 43
10 Installation in piping 43
10.1 Installation location 43
10.2 Preparing for installation 43
10.3 Installation with clamp connections 44
10.4 Installation with butt weld spigots 44
11 Mounting 45
12 Electrical connection 46
13 Commissioning 50
13.1 Commissioning on the device 50
13.2 Commissioning via the eSy-Web web interface 50
13.3 Commissioning via digital input 50
14 Operation 50
14.1 Manual override 50
15 Operation 51
16 Error messages 51
16.1 LED error messages 51
16.2 Troubleshooting 53
17 Inspection and maintenance 54
18 Removal from piping 63
19 Disposal 63
20 Returns 63
21 EU Declaration of Incorporation 64
22 EU Declaration of Conformity 65

1 General information

1.1 Information

- The descriptions and instructions apply to the standard versions. For special versions not described in this document the basic information contained herein applies in combination with any additional special documentation.
- Correct installation, operation, maintenance and repair work ensure faultless operation of the product.
- Should there be any doubts or misunderstandings, the German version is the authoritative document.
- Contact us at the address on the last page for staff training information.

1.2 Symbols used

The following symbols are used in this document:

Symbol	Meaning
●	Tasks to be performed
▶	Response(s) to tasks
–	Lists

1.3 Definition of terms

Working medium

The medium that flows through the GEMÜ product.

PD

PD = Plug Diaphragm

1.4 Warning notes

Wherever possible, warning notes are organized according to the following scheme:

SIGNAL WORD	
Possible symbol for the specific danger	Type and source of the danger ▶Possible consequences in case of non-compliance ●Measures for avoiding danger

Warning notes are always labelled with a signal word and sometimes also with a symbol for the specific danger.

The following signal words and danger levels are used:

⚠ DANGER

Imminent danger!

▶ Non-observance can cause death or severe injury

⚠ WARNING

Potentially dangerous situation!

▶ Non-observance can cause death or severe injury

⚠ CAUTION

Potentially dangerous situation!

▶ Non-observance can cause moderate to light injury

NOTICE

Potentially dangerous situation!

▶ Non-observance can cause damage to property

The following symbols for the specific dangers can be used within a warning note:

Symbol	Meaning
	Danger of explosion!
	The equipment is subject to pressure!
	Corrosive chemicals!
	Hot plant components!
	Danger – high voltage!
	Danger from pressure surges or excessive pressure!
	Maximum permissible pressure exceeded!
	Corrosion from media that attack the valve body, seals or diaphragm
	Risk of crushing!
	Rotating cover!
	Hot surfaces!

Symbol	Meaning
	Noise emissions caused by high flow velocities (cavitation)
	Danger - high voltage!

2 Safety information

The safety information in this document refers only to an individual product. Potentially dangerous conditions can arise in combination with other plant components, which need to be considered on the basis of a risk analysis. The operator is responsible for the production of the risk analysis and for compliance with the resulting precautionary measures and regional safety regulations.

The document contains fundamental safety information that must be observed during commissioning, operation and maintenance. Non-compliance with these instructions may cause:

- Personal hazard due to electrical, mechanical and chemical effects
- Hazard to nearby equipment
- Failure of important functions
- Hazard to the environment due to the leakage of dangerous materials

The safety information does not take into account:

- Unexpected incidents and events, which may occur during installation, operation and maintenance
- Local safety regulations which must be adhered to by the operator and by any additional installation personnel

Prior to commissioning:

1. Transport and store the product correctly.
2. Do not paint the bolts and plastic parts of the product.
3. Carry out installation and commissioning using trained personnel.
4. Provide adequate training for installation and operating personnel.
5. Ensure that the contents of the document have been fully understood by the responsible personnel.
6. Define the areas of responsibility.
7. Observe the safety data sheets.
8. Observe the safety regulations for the media used.

During operation:

1. Keep this document available at the place of use.
2. Observe the safety information.
3. Operate the product in accordance with this document.
4. Operate the product in accordance with the specifications.
5. Maintain the product correctly.
6. Do not carry out any maintenance work and repairs not described in this document without consulting the manufacturer first.

In cases of uncertainty:

1. Consult the nearest GEMÜ sales office.

3 Product description

3.1 Construction

3.1.1 Construction

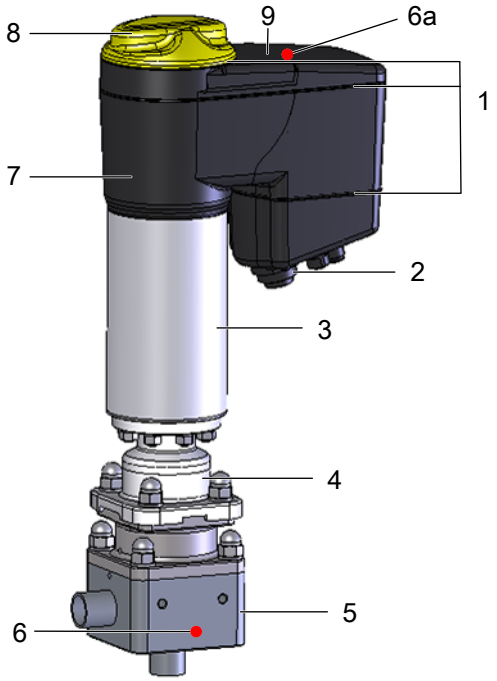

Item	Name	Materials
1	O-rings	EPDM
2	Electrical connections	
3	Actuator base	1.4301
4	Distance piece	1.4408
5	Valve body with leak detection hole	1.4435, 1.4539, 2.4602, 1.4410, 1.4529
6	CONEXO RFID chip	6 (AG2, AG4, AG5) 6a (AG3)
7	Optical position indicator	PC
8	Cover with high visibility LED, manual override and on-site control	PC
9	Actuator top	PC black

3.1.2 Buttons for on-site control

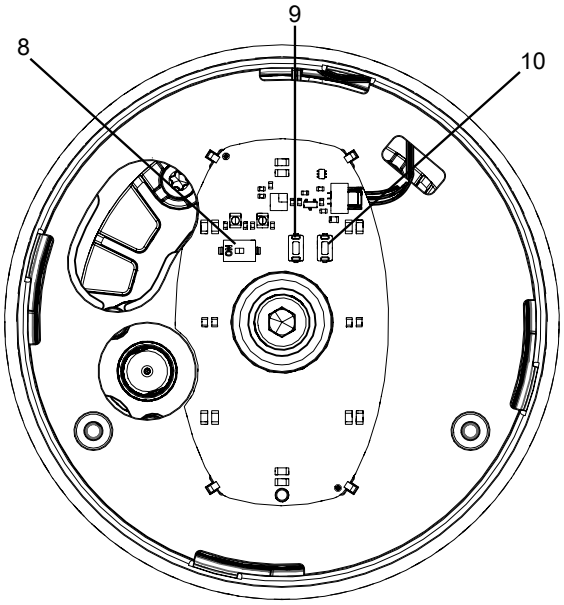

Fig. 1: Position of the buttons

Item	Name	Function
8	DIP switch, "ON-site" control	Switches the on-site control on the device on or off
9	"OPEN" button	Moves actuator to the open position Resets the network settings
10	"INIT/CLOSE" button	Moves actuator to the closed position Starting initialisation

3.1.3 LED displays

3.1.3.1 On-site status LEDs

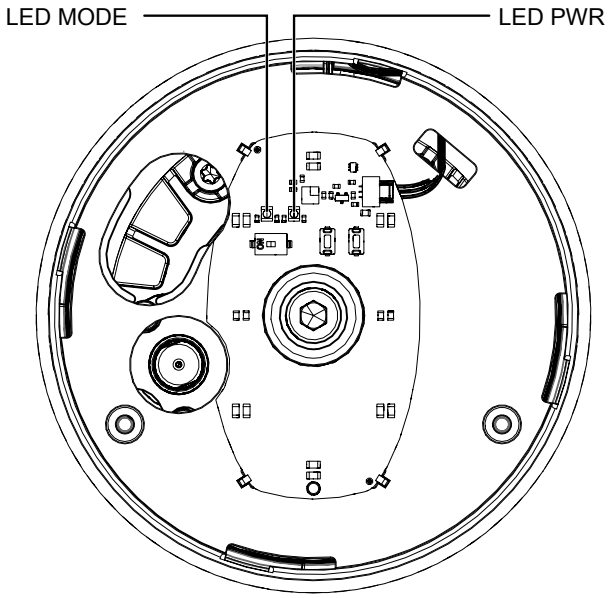

Fig. 2: Position of the status LEDs

The user checks the following conditions directly on-site at the valve using LED MODE and LED PWR:

Function	LED MODE		LED PWR	
	Yellow	Blue	Green	Red
Automatic operation	●	○	●	○
Manual operation	✳	○	●	○
Actuator switched off (OFF mode)	○	○	●	○
Manual operation (on-site)	○	●	●	○
Software update	✳ alternating	✳ alternating	●	○
On-site initialisation (buttons)	○	✳	●	○
Remote initialisation (via DigIn)	●	○	●	○

Function	LED MODE		LED PWR	
	Yellow	Blue	Green	Red
Operation via emergency power supply module			✳	

3.1.3.2 High visibility LEDs

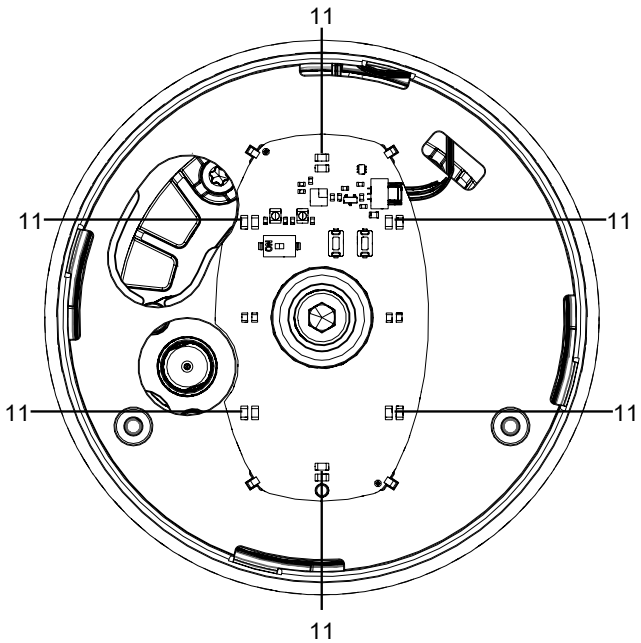

Fig. 3: Position of the high visibility LEDs

Item	Name
11	High visibility LEDs

Function		High visibility LED	
		green	orange
OPEN position	Position indicator LEDs standard	○	●
OPEN position	Position indicator LEDs inversed	●	○
CLOSED position	Position indicator LEDs standard	●	○
CLOSED position	Position indicator LEDs inversed	○	●
Position unknown	(e.g. 50%)	○	○

Function	High visibility LED	
	green	orange
Initialization		
	alternating	
Location function		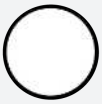

3.2 Description

The GEMÜ 567 eSyDrive 2/2-way diaphragm globe valve is a precise motorized control valve for sterile applications. The GEMÜ eSyDrive hollow shaft actuator can be operated as an actuator with integrated positioner or process controller. Flow rates range from 80 l/h to 63 m³/h, depending on the version.

3.3 Function

The product controls or regulates (depending on version) a flowing medium by being closed or opened by a motorized actuator.

The product has an optical position indicator as standard. The optical position indicator indicates the OPEN and CLOSED positions.

3.4 PD seal system without bypass

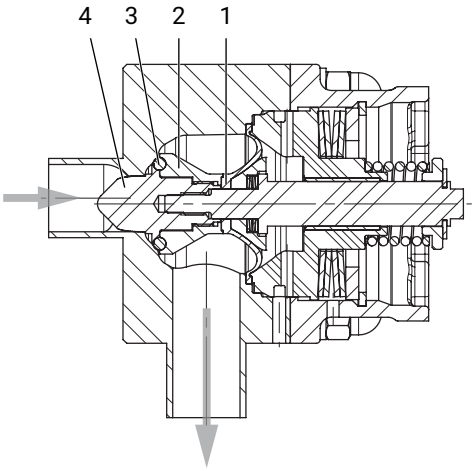

Seal material code 4

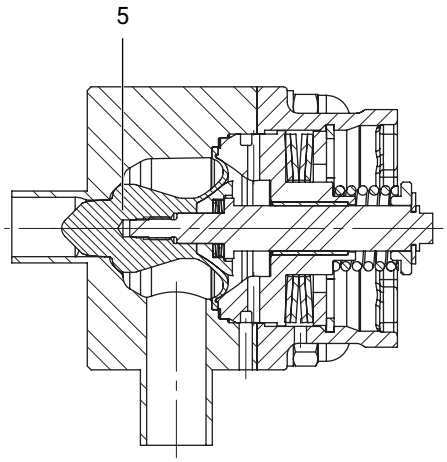

Seal material code 5

Item	Name	Materials
1	Plug diaphragm	PTFE
2	Support ring	1.4435, 1.4539, 2.4602, 1.4410, 1.4529
3	O-ring	FKM
4	Regulating cone	1.4435, 1.4539, 2.4602, 1.4410, 1.4529
5	Plug diaphragm with regulating cone	PTFE

3.5 PD seal system with bypass

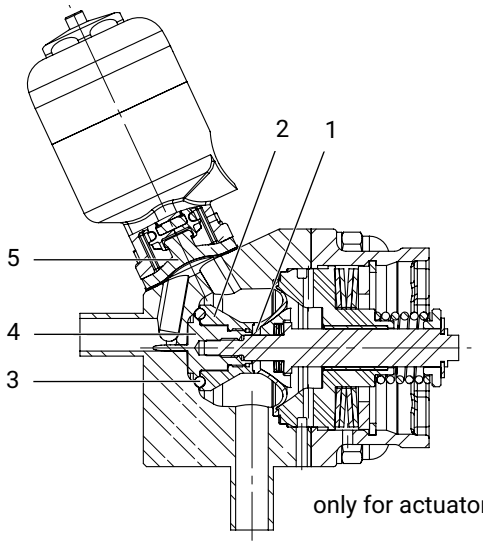

only for actuator size 2T1, 2V1

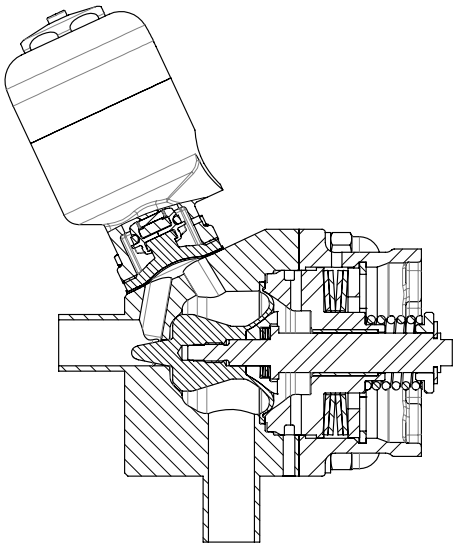

Item	Name	Materials
1	Plug diaphragm FKM, PTFE	PTFE
2	Support ring	1.4435, 1.4539, 2.4602, 1.4410, 1.4529
3	O-ring	FKM, FFKM
4	Regulating cone	1.4435, 1.4539, 2.4602, 1.4410, 1.4529
5	Bypass valve diaphragm	PTFE-EPDM, EPDM

3.6 Installation position for optimized draining

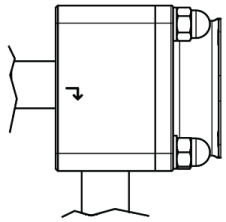

in closed and open position
Actuator horizontal

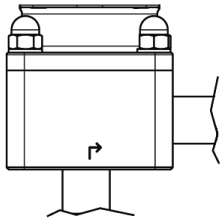

in open position
Actuator horizontal or vertical

Control range

We recommend designing the valves in such a way that the control range is within an opening stroke of 20% to 90% of the control valve.

3.7 Product label

The product label is located on the actuator. Product label data (example):

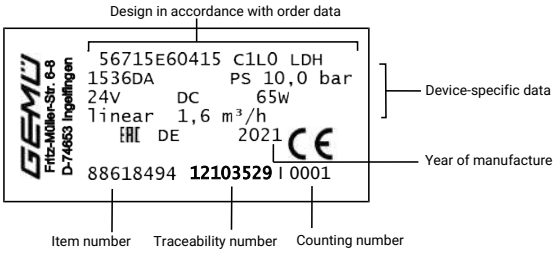

The month of manufacture is encoded in the traceability number and can be obtained from GEMÜ. The product was manufactured in Germany.

4 Intended use

⚠ DANGER

Danger of explosion!

- ▶ Risk of death or severe injury
- ● Do **not** use the product in potentially explosive zones.

⚠ WARNING

Improper use of the product!

- ▶ Risk of severe injury or death
- ▶ Manufacturer liability and guarantee will be void.
- ● Only use the product in accordance with the operating conditions specified in the contract documentation and in this document.

The product is designed for installation in piping systems and for controlling a working medium.

The product is not intended for use in potentially explosive areas.

The product is only intended for operation in industrial environments.

The product is not intended for use in a public low-voltage network supplying residential areas. Connection to a mains of this kind can cause radio frequency interference.

- ● Use the product in accordance with the technical data.

5 GEMÜ CONEXO

Order without CONEXO

If you have ordered the product without CONEXO functionality, the RFID chip is used for traceability in the production process and quality assurance. Expansion to include the CONEXO functionality at a later date must be coordinated with GEMÜ.

Order with CONEXO

GEMÜ CONEXO must be ordered separately with the ordering option "CONEXO" (see order data).

For electronic identification purposes, each replaceable component contained in the product you have purchased is equipped with an RFID chip (1). Where you can find the RFID chip differs from product to product.

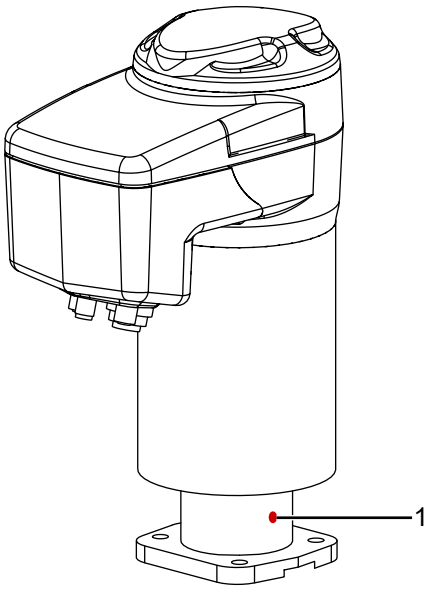

Fig. 4: Actuator RFID chip

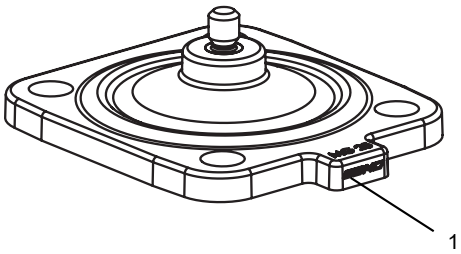

Fig. 5: Diaphragm RFID chip

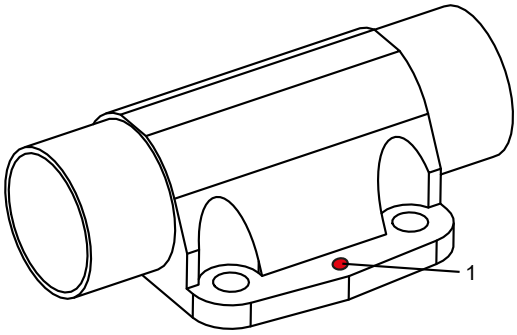

Fig. 6: Valve body RFID chip

The CONEXO pen helps read out information stored in these RFID chips. The CONEXO app or CONEXO portal is required to view this information.

6 Order data - eSyDrive

The order data provide an overview of standard configurations.

Please check the availability before ordering. Other configurations available on request.

Order codes

1 Type	Code
Control valve	567

2 DN	Code
DN 8	8
DN 10	10
DN 15	15
DN 20	20
DN 25	25
DN 32	32
DN 40	40
DN 50	50
DN 65	65

3 Body configuration	Code
2-way angle body	E
2-way angle body with bypass	M

4 Connection type	Code
Spigot	
Spigot DIN	0
Spigot EN 10357 series A/DIN 11866 series A formerly DIN 11850 series 2	17
Spigot ASME BPE/DIN EN 10357 series C (from 2022 edition)/DIN 11866 series C	59
Spigot ISO 1127/DIN EN 10357 series C (2014 edition)/ DIN 11866 series B	60
Clamp	
Clamp DIN 32676 series B	82
Clamp DIN 32676 series A	86
Clamp ASME BPE, for pipe ASME BPE	88

5 Valve body material	Code
1.4435 (316L), block material	41
1.4435 (BN2), block material, Δ Fe < 0.5%	43
1.4539/UNS N08904, block material	44
2.4602, Alloy 22 block material, (NiCr21Mo14W)	A3
1.4410, block material	A7
1.4529, block material	A8

6 Seal material	Code
PTFE actuator seal/FKM seat seal	4
PTFE actuator seal/PTFE seat seal	5
PTFE actuator seal/FKM seat seal/EPDM bypass seal bypass diaphragm code 13	43
PTFE actuator seal/FKM seat seal/PTFE bypass seal bypass diaphragm code 54	45
PTFE actuator seal/FKM seat seal/EPDM bypass seal bypass diaphragm code 17	47

6 Seal material	Code
PTFE actuator seal/PTFE seat seal/PTFE bypass seal bypass diaphragm code 54	55
PTFE actuator seal/FFKM seat seal	F
PTFE actuator seal/FFKM seat seal/PTFE bypass seal bypass diaphragm code 54	F5

7 Voltage/Frequency	Code
24 V DC	C1

8 Control module	Code
OPEN/CLOSE, positioner and process controller	L0

9 Control characteristic	Code
Modified equal-percentage	G
Linear	L

10 Kv value	Code
80 l/h	AA
100 l/h	AB
160 l/h	BC
250 l/h	BD
400 l/h	BE
630 l/h	CF
1.0 m³/h	CG
1.6 m³/h	DH
2.6 m³/h	EJ
4.1 m³/h	G1
8.0 m³/h	H2
12.5 m³/h	J3
14.0 m³/h	K4
18.0 m³/h	K5
25.0 m³/h	K6
32.0 m³/h	M7
40.0 m³/h	M8
50.0 m³/h	N9
63.0 m³/h	NK

11 Bypass actuator version	Code
Pneumatically operated, normally closed, diaphragm size 8,	11
Pneumatically operated, normally open, diaphragm size 8,	12
Manually operated, with seal adjuster, diaphragm size 8,	S0

12 Surface	Code
Ra ≤ 0.25 µm (10 µin.) for media wetted surfaces *), in accordance with DIN 11866 HE5, electropolished internal/external, *) for inner pipe diameters < 6 mm, in the spigot Ra ≤ 0.38 µm	1516

12 Surface	Code
Ra ≤ 0.25 µm (10 µin.) for media wetted surfaces *), in accordance with DIN 11866 H5, mechanically polished internal, *) for inner pipe diameters < 6 mm, in the spigot Ra ≤ 0.38 µm	1527
Ra ≤ 0.4 µm (15 µin.) for media wetted surfaces, in accordance with DIN 11866 H4, mechanically polished internal	1536
Ra ≤ 0.4 µm (15 µin.) for media wetted surfaces, in accordance with DIN 11866 HE4, electropolished internal/external	1537
Ra max. 0.51 µm (20 µin.) for media wetted surfaces, in accordance with ASME BPE SF1, mechanically polished internal	SF1

12 Surface	Code
Ra max. 0.38 µm (15 µin.) for media wetted surfaces, in accordance with ASME BPE SF4, electropolished internal/external	SF4
Ra max. 0.51 µm (20 µin.) for media wetted surfaces, in accordance with ASME BPE SF5, electropolished internal/external	SF5

13 Actuator+interface	Code
eSyDrive and analogue	DA

14 CONEXO	Code
Without	
Integrated RFID chip for electronic identification and traceability	C

Order example without bypass

Ordering option	Code	Description
1 Type	567	Control valve
2 DN	15	DN 15
3 Body configuration	M	2-way angle body with bypass
4 Connection type	17	Spigot EN 10357 series A/DIN 11866 series A formerly DIN 11850 series 2
5 Valve body material	41	1.4435 (316L), block material
6 Seal material	55	PTFE actuator seal/PTFE seat seal/PTFE bypass seal bypass diaphragm code 54
7 Voltage/Frequency	C1	24 V DC
8 Control module	L0	OPEN/CLOSE, positioner and process controller
9 Control characteristic	G	Modified equal-percentage
10 Kv value	G1	4.1 m³/h
11 Bypass actuator version	S0	Manually operated, with seal adjuster, diaphragm size 8,
12 Surface	1536	Ra ≤ 0.4 µm (15 µin.) for media wetted surfaces, in accordance with DIN 11866 H4, mechanically polished internal
13 Actuator+interface	DA	eSyDrive and analogue
14 Special version	M	Special version for 3A
15 CONEXO	C	Integrated RFID chip for electronic identification and traceability

7 Technical data

7.1 Medium

Working medium: Corrosive, inert, gaseous and liquid media which have no negative impact on the physical and chemical properties of the body and diaphragm material.

7.2 Temperature

Media temperature:

Without bypass	-10 — 160 °C
With bypass	-10 — 100 °C

Observe pressure/temperature diagram

Sterilization temperature:

Seat seal FKM, FFKM without bypass, (code 4, F)	160 °C [1], steam max. 30 min [2]
Seat seal PTFE without bypass, (code 5)	160 °C [1], steam max. 30 min [2]
Seat seal FKM, FFKM bypass diaphragm material EPDM, (code 43, F3)	150 °C [3], max. 30 min
Seat seal FKM, FFKM bypass diaphragm material PTFE/EPDM, PTFE laminated, (code 45, F5)	150 °C [3], max. 30 min
Seat seal FKM, FFKM bypass diaphragm material EPDM, (code 47, F7)	150 °C [3], max. 30 min
Seat seal PTFE bypass diaphragm material PTFE/EPDM, PTFE laminated, (code 55)	150 °C [3], max. 30 min

1) The sterilization temperature is only valid for steam (saturated steam) or superheated water.

2) Longer sterilization times or continuous operation on request.

3) If the sterilization temperatures listed above are applied to the EPDM diaphragms for longer periods of time, the service life of the diaphragms will be reduced. In these cases, maintenance cycles must be adapted accordingly. This also applies to PTFE diaphragms exposed to high temperature fluctuations. The maintenance cycles must be adapted accordingly.

Ambient temperature: -10 — 60 °C

Storage temperature: 0 — 40 °C

7.3 Pressure

Operating pressure: 0 — 10 bar

All pressures are bar – gauge pressure. Operating pressure values were determined with static operating pressure applied on one side of a closed valve. Sealing at the valve seat and atmospheric sealing is ensured for the given values.

Information on operating pressures applied on both sides and for high purity media on request.

Operating pressure:

Pressure/Temperature diagram

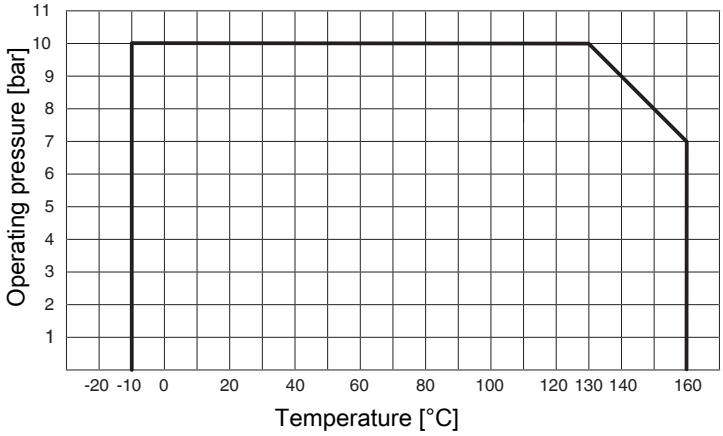

Leakage rate:

Control valve

Seat seal	Standard	Test procedure	Leakage rate	Test medium
FKM, PTFE	DIN EN 60534-4	1	VI	Air

Kv values:

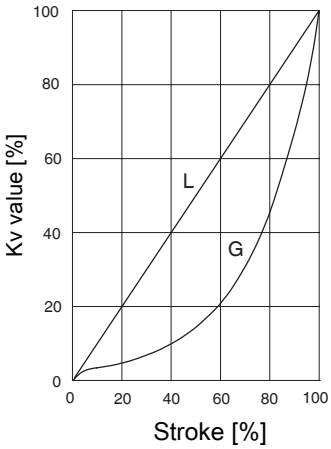

Kv values:

Code 17, 60, 82 and 86

AG	Seal material code	Control characteristic	Kv value	DN 8	DN 10	DN 15	DN 20	DN 25	DN 32	DN 40	DN 50
2	4, 43, 45, 47, F, F5	GAA, LAA	80 l/h	X	X	X	-	-	-	-	-
		GAB, LAB	100 l/h	X	X	X	-	-	-	-	-
		GBC, LBC	160 l/h	X	X	X	-	-	-	-	-
		GBD, LBD	250 l/h	X	X	X	-	-	-	-	-
		GBE, LBE	400 l/h	X	X	X	-	-	-	-	-
	5, 55	GCF, LCF	630 l/h	X	X	X	-	-	-	-	-
		GCG, LCG	1.0 m³/h	-	X	X	-	-	-	-	-
		GDH, LDH	1.6 m³/h	-	X	X	-	-	-	-	-
		GEJ, LEJ	2.6 m³/h	-	-	X	-	-	-	-	-
		GG1, LG1	4.1 m³/h	-	-	X	-	-	-	-	-
3	5	GH2, LH2	8.0 m³/h	-	-	-	X	X	-	-	-
		GJ3, LJ3	12.5 m³/h	-	-	-	-	X	-	-	-
4	5	GK4, LK4	14.0 m³/h	-	-	-	-	-	X	X	-
		GK5, LK5	18.0 m³/h	-	-	-	-	-	X	X	-
		GK6, LK6	25.0 m³/h	-	-	-	-	-	X	X	-
		GM7, LM7	32.0 m³/h	-	-	-	-	-	-	X	-
		GM8, LM8	40.0 m³/h	-	-	-	-	-	-	X	-
5	5	GN9, LN9	50.0 m³/h	-	-	-	-	-	-	-	X
		GNK, LNK	63.0 m³/h	-	-	-	-	-	-	-	X

Code 59 and 88

AG	Seal material code	Control characteristic	Kv value	DN 15	DN 20	DN 25	DN 40	DN 50	DN 65
2	4, 43, 45, 47, F, F5	GAA, LAA	80 l/h	X	X	-	-	-	-
		GAB, LAB	100 l/h	X	X	-	-	-	-
		GBC, LBC	160 l/h	X	X	-	-	-	-
		GBD, LBD	250 l/h	X	X	-	-	-	-
		GBE, LBE	400 l/h	X	X	-	-	-	-
	5, 55	GCF, LCF	630 l/h	X	X	-	-	-	-
		GCG, LCG	1.0 m³/h	X	X	-	-	-	-
		GDH, LDH	1.6 m³/h	X	X	-	-	-	-
		GEJ, LEJ	2.6 m³/h	-	X	-	-	-	-
		GG1, LG1	4.1 m³/h	-	X	-	-	-	-
3	5	GH2, LH2	8.0 m³/h	-	-	X	-	-	-
4	5	GK4, LK4	14.0 m³/h	-	-	-	X	X	-
		GK5, LK5	18.0 m³/h	-	-	-	X	X	-
		GK6, LK6	25.0 m³/h	-	-	-	X	X	-
		GM7, LM7	32.0 m³/h	-	-	-	-	X	-
		GM8, LM8	40.0 m³/h	-	-	-	-	X	-
5	5	GN9, LN9	50.0 m³/h	-	-	-	-	-	X
		GNK, LNK	63.0 m³/h	-	-	-	-	-	X

Kv values:

Bypass (only available in AG2)

DN	Connection type code		
	0, 17, 86	60, 82	59, 88
8	1.5 m^3/h	1.8 m^3/h	-
10	1.8 m^3/h	2.1 m^3/h	-
15	2.1 m^3/h	2.1 m^3/h	1.8 m^3/h
20	-	-	2.1 m^3/h

AG = actuator size
Kv values determined acc.to DIN EN 60534.

7.4 Product compliance

Pressure Equipment Directive:	2014/68/EU
Machinery Directive:	2006/42/EC
EMC Directive:	2014/30/EU Technical standards used:

Interference resistance	EN 61000-6-2:2005/AC:2005 EN 61326-1:2013 EN 61800-3:2004/A1:2012
Interference emission	EN 61000-6-4:2007/A1:2011 (only AG0 and AG1) EN 61800-3:2004/A1:2012 EN 61326-1:2013 (only AG0 and AG1)

Food:

Regulation (EC) No. 1935/2004*

Regulation (EC) No. 10/2011*

FDA*

USP* Class VI

* depending on version and/or operating parameters

7.5 Mechanical data

Protection class: IP 65 acc. to EN 60529

Weight:

Actuator	
Actuator size 2	2.86 kg
Actuator size 3	4.56 kg
Actuator size 4	11.52 kg
Actuator size 5	14.44 kg
Body	
Actuator size 2	1.6 kg
Actuator size 3	2.8 kg
Actuator size 4	4.3 kg
Actuator size 5	7.6 kg

Actuating speed:

Actuator size 2	adjustable, max. 6 mm/s
Actuator size 3	adjustable, max. 6 mm/s
Actuator size 4	adjustable, max. 4 mm/s
Actuator size 5	adjustable, max. 4 mm/s

7.6 Duty cycle and service life

Service life:	**Control operation** - Class C acc. to EN 15714-2 (1,800,000 start-ups and 1200 start-ups per hour). **Open / Close duty** - Minimum 1,000,000 switching cycles at room temperature and permissible duty cycle.
Duty cycle:	**Control operation** - Class C acc. to EN 15714-2. **Open/Close duty** - 100%

7.7 Electrical data

7.7.1 Supply voltage

	Actuator size 2	Actuator size 3	Actuator size 4, 5
Voltage	Uv = 24 V DC ± 10%		
Rating	Max. 28 W	Max. 65 W	Max. 120 W
Reverse battery protection	Yes		

7.7.2 Analogue input signals

7.7.2.1 Set value

Input signal: 0/4 - 20 mA; 0 – 10 V DC (selectable using software)

Input type: passive

Input resistance: 250 Ω

Accuracy/linearity: ≤ ±0.3% of full scale value

Temperature drift: ≤ ±0.1% / 10°K

Resolution: 12 bit

Reverse polarity protection: No

Overload proof: Yes (up to ± 24 V DC)

7.7.2.2 Process actual value

Input signal: 0/4 - 20 mA; 0 – 10 V DC (selectable using software)

Input type: passive

Input resistance: 250 Ω

Accuracy/linearity: ≤ ±0.3% of full scale value

Temperature drift: ≤ ±0.1% / 10°K

Resolution: 12 bit

Reverse polarity protection: No

Overload proof: Yes (up to ± 24 V DC)

7.7.3 Digital input signals

Digital inputs: 3

Function: Can be selected using software

Voltage: 24 V DC

Logic level "1": >14 V DC

Logic level "0": < 8 V DC

Input current: typ. 2.5 mA (at 24 V DC)

7.7.4 Analogue output signals

7.7.4.1 Actual value

Output signal:	0/4 - 20 mA; 0 – 10 V DC (selectable using software)
Output type:	Active (AD5412)
Accuracy:	≤ ±1% of full scale value
Temperature drift:	≤ ±0.1% / 10°K
Load resistor:	≤ 750 kΩ
Resolution:	10 bit
Overload proof:	Yes (up to ± 24 V DC)
Short-circuit proof:	Yes

7.7.5 Digital output signals

7.7.5.1 Switching outputs 1 and 2

Design:	2x make contact, potential-free
Switching voltage:	max. 48 V DC / 48 V AC
Switch rating:	max. 60 W / 2A
Switch points:	Adjustable 0 - 100 %

7.7.5.2 Switching output 3

Function:	Signal fault
Type of contact:	Push-Pull
Switching voltage:	Supply voltage
Switching current:	≤ 0.1 A
Drop voltage:	Max. 2.5 V DC at 0.1 A
Overload proof:	Yes (up to ± 24 V DC)
Short-circuit proof:	Yes
Pull-Down resistance:	120 kΩ

7.7.6 Communication eSy-Web

Interface:	Ethernet
Function:	Parameterisation via web browser
IP address:	192.168.2.1 alterable via web browser
Subnet screen:	255.255.252.0 alterable via web browser

The actuator and the PC must be in the same network to use the web server. The IP address of the actuator is entered in the web browser and the actuator can then be parametrised. In order to use more than one actuator, a definitive IP address must be assigned to each actuator in the same network.

7.7.7 Communication Modus TCP

Interface: Modbus TCP

IP address: 192.168.2.1 alterable via web browser

Subnet screen: 255.255.252.0 alterable via web browser

Port: 502

Supported function codes:

Code Dezimal	Code Hex	Function
3	0x03	Read Holding Registers
4	0x04	Read Input Registers
6	0x06	Write Single Register
16	0x10	Write Multiple Registers
23	0x17	Read / Write Multiple Registers

7.7.8 Behaviour in the event of an error

Function: In the event of an error the valve moves to the error position.

Notes: Moving to the error position is only possible with full power supply. This behaviour is not a safety position. The valve must be operated with a GEMÜ 1571 emergency power supply module (see accessories) to ensure the function in case of voltage loss.

Error position: Closed, open or hold (adjustable via eSy-web web interface).

8 Dimensions

8.1 Actuator dimensions

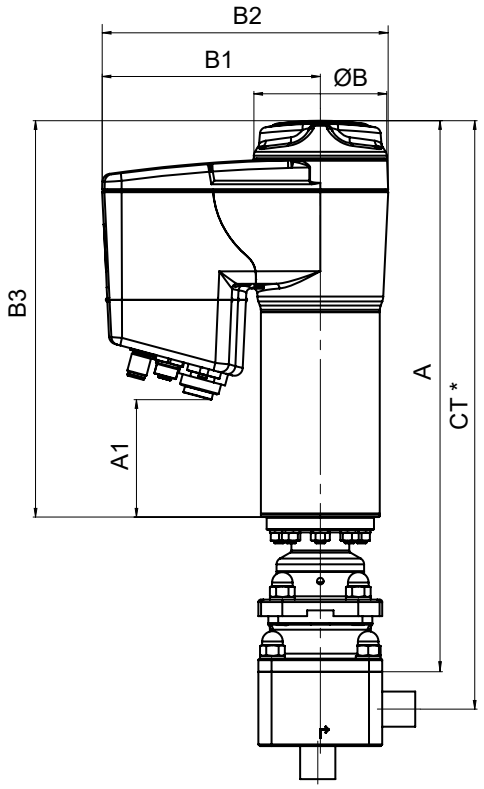

DN	Actuator size	A	A1	ØB	B1	B2	B3
8 - 20	2	263.7	44.0	68.0	126.0	160.0	190.0

DN	Actuator size	A	A1	ØB	B1	B2	B3
20 - 25	3	351.5	83.0	82.0	132.0	172.0	250.0
32 - 50	4	411.5	124.0	134.0	157.0	224.0	296.0
50 - 65	5	433.0	124.0	134.0	157.0	224.0	296.0

Dimensions in mm
* CT = A + H1 (see body dimensions)

8.2 Body dimensions

8.2.1 Spigot without bypass code 0

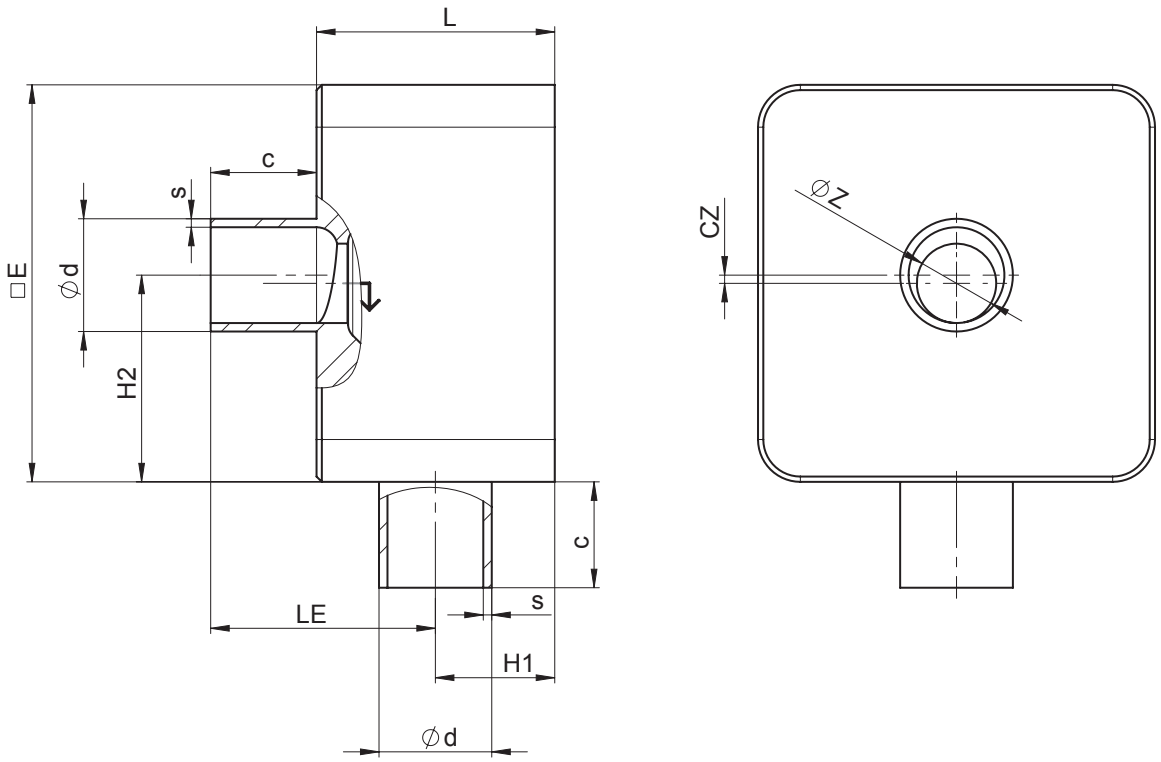

AG	DN	Connection type code 0 [1]										
		Seat size (code)	L	□E	c	Øz	LE	H1	H2	cz	Ød	s
2	15	A	45.0	75.0	20.0	2.0	44.0	21.0	40.5	6.5	18.0	1.5
		B	45.0	75.0	20.0	4.0	44.0	21.0	39.5	5.5	18.0	1.5
		C	45.0	75.0	20.0	6.0	44.0	21.0	38.5	4.5	18.0	1.5
		D	45.0	75.0	20.0	8.0	44.0	21.0	41.0	3.5	18.0	1.5
		E	45.0	75.0	20.0	10.0	44.0	21.0	40.0	2.5	18.0	1.5
		G	45.0	75.0	20.0	15.0	44.0	21.0	37.5	0.0	18.0	1.5
3	20	H	55.0	95.0	25.0	20.0	54.0	26.0	50.0	0.0	22.0	1.5
	25	H	55.0	95.0	25.0	20.0	54.0	26.0	50.0	2.5	28.0	1.5
		J	55.0	95.0	25.0	25.0	54.0	26.0	47.5	0.0	28.0	1.5

Dimensions in mm
AG = actuator size

1) **Connection type**
Code 0: Spigot DIN

8.2.2 Spigot without bypass code 17

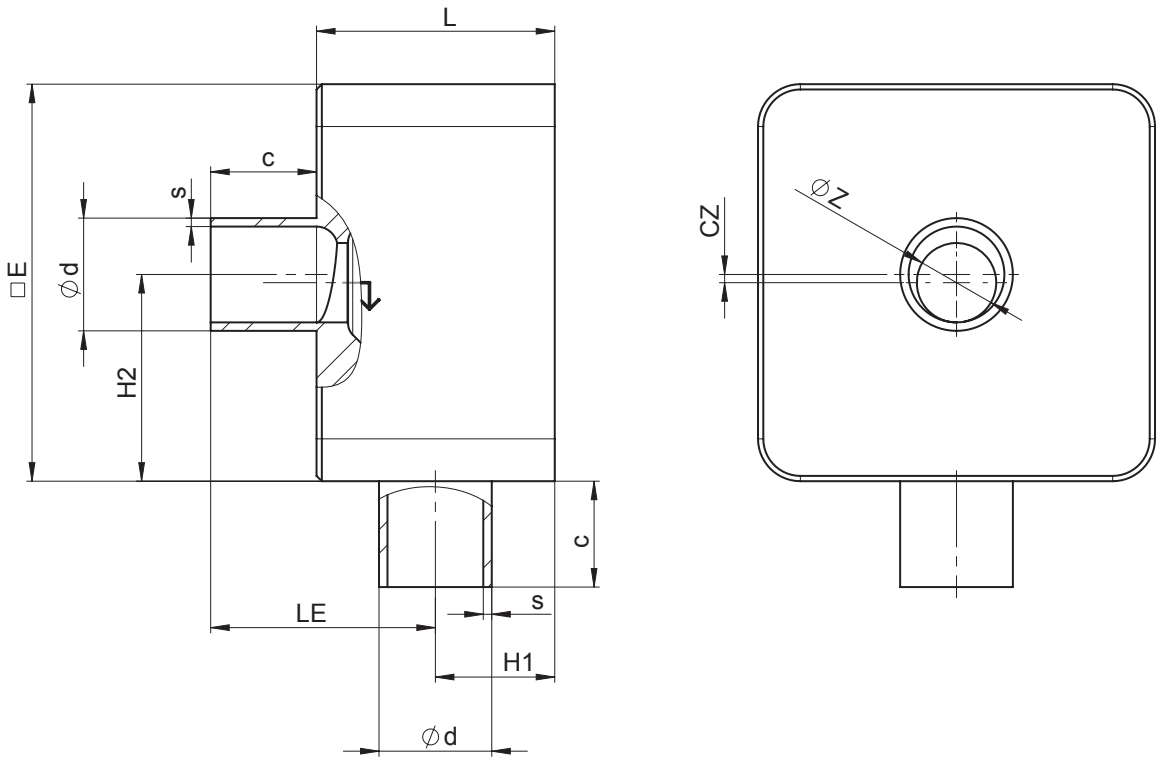

AG	DN	Connection type code 17 [1]										
		Seat size (code)	L	□E	c	Øz	LE	H1	H2	cz	Ød	s
2	8	A	45.0	75.0	20.0	2.0	47.5	17.5	40.5	3.0	10.0	1.0
		B	45.0	75.0	20.0	4.0	47.5	17.5	39.5	2.0	10.0	1.0
		C	45.0	75.0	20.0	6.0	47.5	17.5	38.5	1.0	10.0	1.0
	10	A	45.0	75.0	20.0	2.0	46.5	18.5	41.5	4.0	13.0	1.5
		B	45.0	75.0	20.0	4.0	46.5	18.5	40.5	3.0	13.0	1.5
		C	45.0	75.0	20.0	6.0	46.5	18.5	39.5	2.0	13.0	1.5
		D	45.0	75.0	20.0	8.0	46.5	18.5	38.5	1.0	13.0	1.5
	15	A	45.0	75.0	20.0	2.0	43.5	21.5	44.5	7.0	19.0	1.5
		B	45.0	75.0	20.0	4.0	43.5	21.5	43.5	6.0	19.0	1.5
		C	45.0	75.0	20.0	6.0	43.5	21.5	42.5	5.0	19.0	1.5
		D	45.0	75.0	20.0	8.0	43.5	21.5	41.5	4.0	19.0	1.5
		E	45.0	75.0	20.0	10.0	43.5	21.5	40.5	3.0	19.0	1.5
		G	45.0	75.0	20.0	15.0	43.5	21.5	38.0	0.5	19.0	1.5
3	20	H	55.0	95.0	25.0	20.0	56.5	23.5	47.5	0.0	23.0	1.5
	25	H	55.0	95.0	25.0	20.0	53.5	26.5	50.5	3.0	29.0	1.5
		J	55.0	95.0	25.0	25.0	53.5	26.5	48.0	0.5	29.0	1.5

Dimensions in mm
AG = actuator size

1) **Connection type**
Code 17: Spigot EN 10357 series A/DIN 11866 series A formerly DIN 11850 series 2

8.2.3 Spigot without bypass code 17

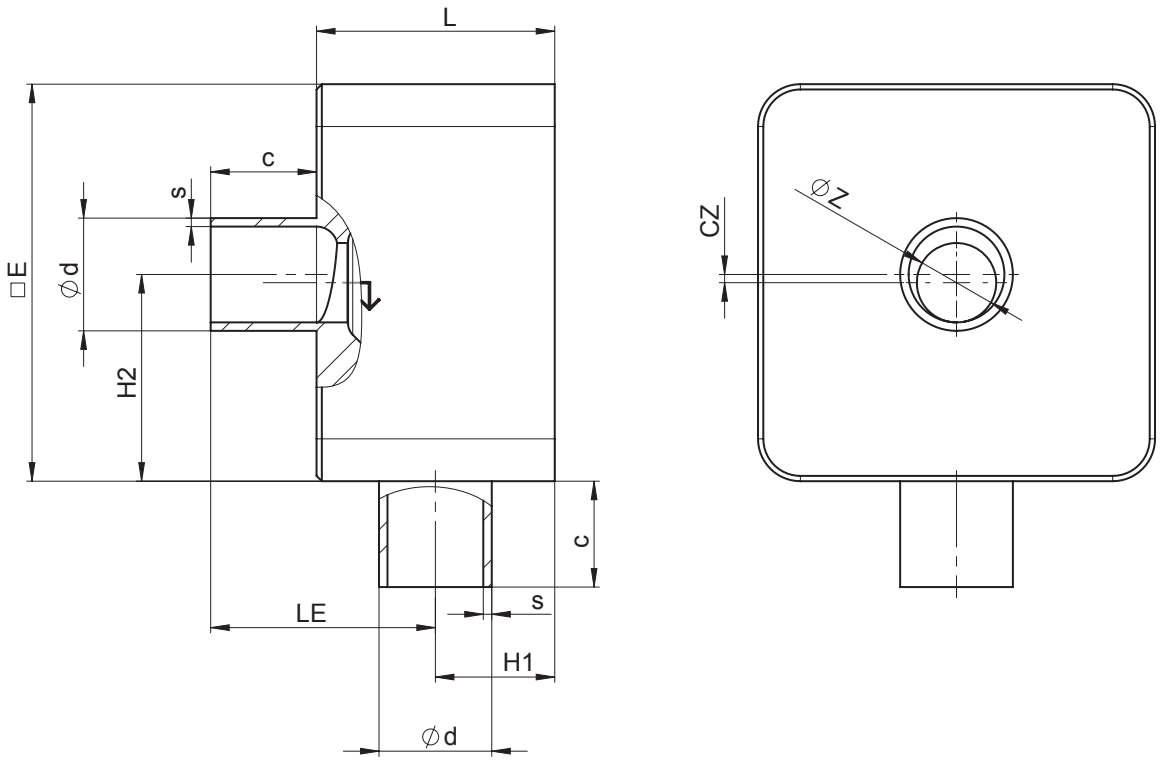

AG	DN	Connection type code 17 [1]										
		Seat size (code)	L	□E	c	Øz	LE	H1	H2	cz	Ød	s
4	32	K	73.0	112.0	25.0	32.0	67.0	31.0	54.5	1.5	38.0	1.5
	40	K	73.0	112.0	25.0	32.0	60.6	32.6	53.0	3.0	41.0	1.5
		M	73.0	112.0	25.0	38.0	60.6	32.6	56.0	0.0	41.0	1.5
5	50	N	84.0	140.0	30.0	50.0	70.3	38.6	90.0	0.0	53.0	1.5

Dimensions in mm
AG = actuator size

1) **Connection type**
Code 17: Spigot EN 10357 series A/DIN 11866 series A formerly DIN 11850 series 2

8.2.4 Spigot without bypass code 59

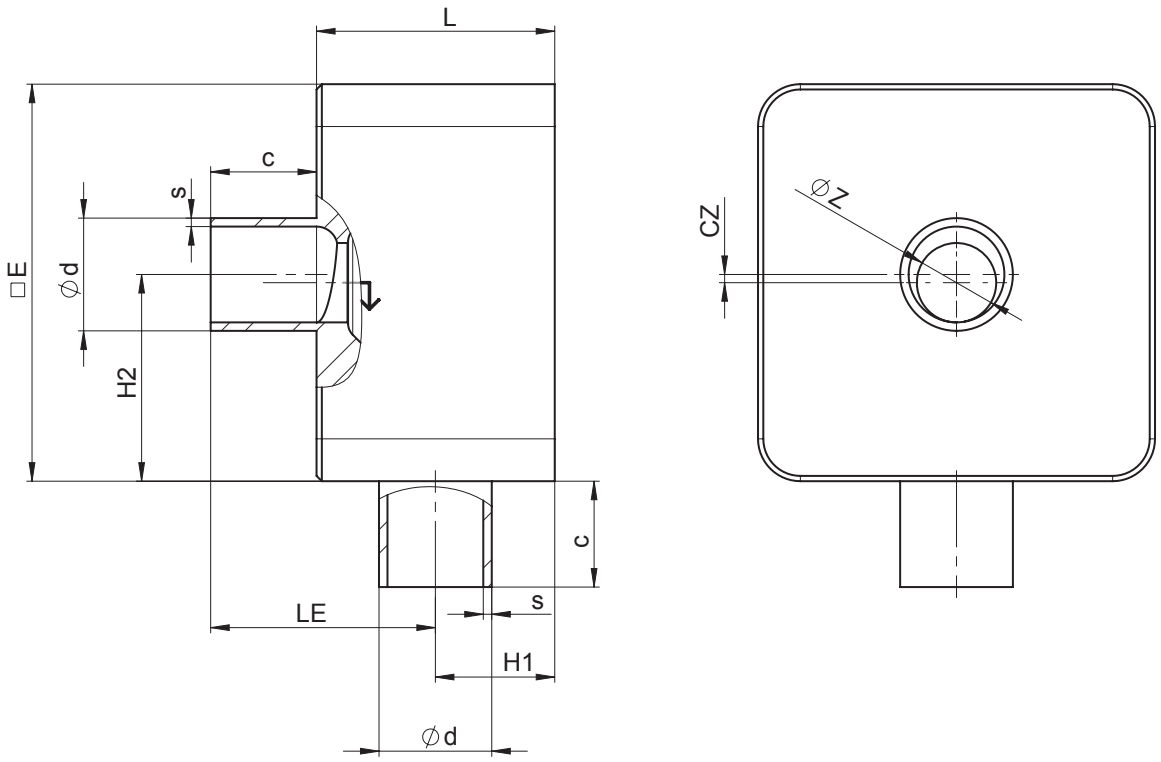

AG	DN	Connection type code 59 [1]										
		Seat size (code)	L	□E	c	Øz	LE	H1	H2	cz	Ød	s
2	15	A	45.0	75.0	20.0	2.0	46.8	18.2	41.20	3.70	12.70	1.65
		B	45.0	75.0	20.0	4.0	46.8	18.2	40.20	2.70	12.70	1.65
		C	45.0	75.0	20.0	6.0	46.8	18.2	39.20	1.70	12.70	1.65
		D	45.0	75.0	20.0	8.0	46.8	18.2	38.20	0.70	12.70	1.65
	20	A	45.0	75.0	20.0	2.0	48.6	21.4	44.38	6.88	19.05	1.65
		B	45.0	75.0	20.0	4.0	43.6	21.4	43.38	5.88	19.05	1.65
		C	45.0	75.0	20.0	6.0	43.6	21.4	42.38	4.88	19.05	1.65
		D	45.0	75.0	20.0	8.0	43.6	21.4	41.38	3.88	19.05	1.65
		E	45.0	75.0	20.0	10.0	43.6	21.4	40.38	2.88	19.05	1.65
		G	45.0	75.0	20.0	15.0	43.6	21.4	37.88	0.38	19.05	1.65
3	25	H	55.0	95.0	25.0	20.0	55.4	24.6	48.60	1.10	25.40	1.65

Dimensions in mm
AG = actuator size

1) **Connection type**
Code 59: Spigot ASME BPE/DIN EN 10357 series C (from 2022 edition)/DIN 11866 series C

8.2.5 Spigot without bypass code 59

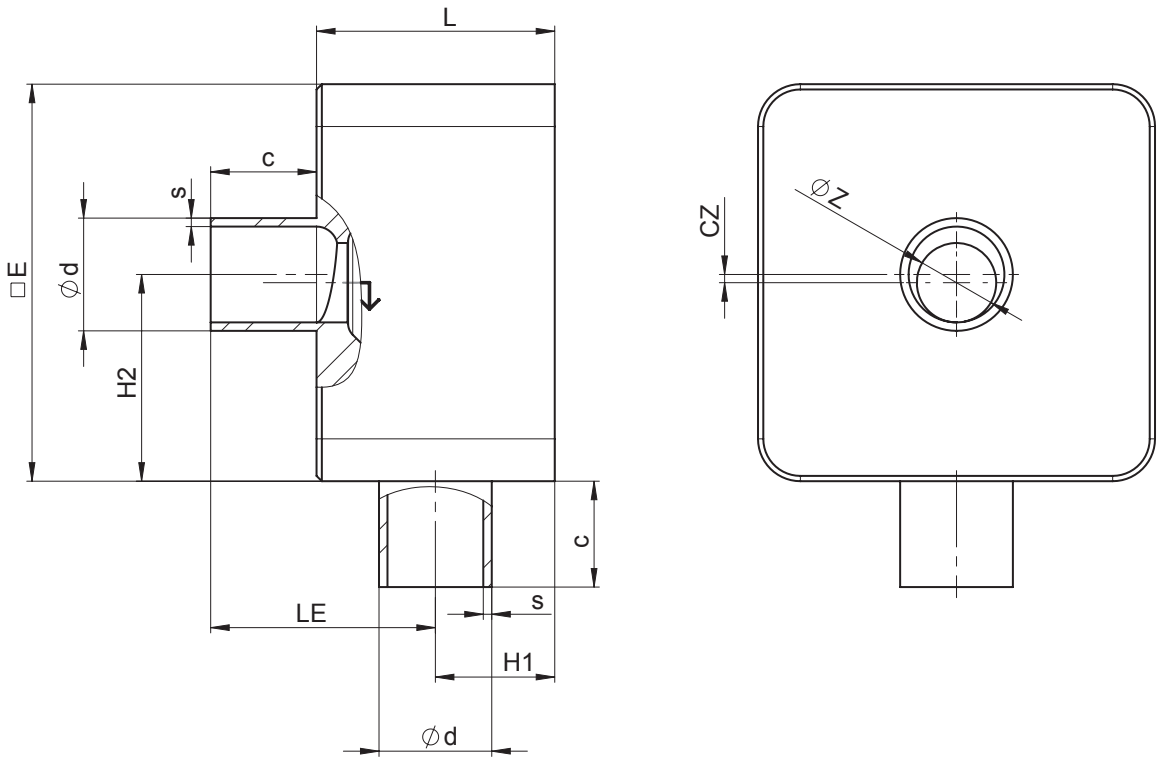

AG	DN	Connection type code 59 [1]										
		Seat size (code)	L	□E	c	Øz	LE	H1	H2	cz	Ød	s
4	40	K	73.0	112.0	25.0	32.0	67.0	31.0	54.6	1.4	38.1	1.65
	50	K	73.0	112.0	25.0	32.0	60.6	37.4	48.25	7.75	50.8	1.65
		M	73.0	112.0	25.0	38.0	60.6	37.4	51.25	4.75	50.8	1.65
5	65	N	84.0	140.0	30.0	50.0	70.3	43.7	84.9	5.1	63.5	1.65

Dimensions in mm
AG = actuator size

1) **Connection type**
Code 59: Spigot ASME BPE/DIN EN 10357 series C (from 2022 edition)/DIN 11866 series C

8.2.6 Spigot without bypass code 60

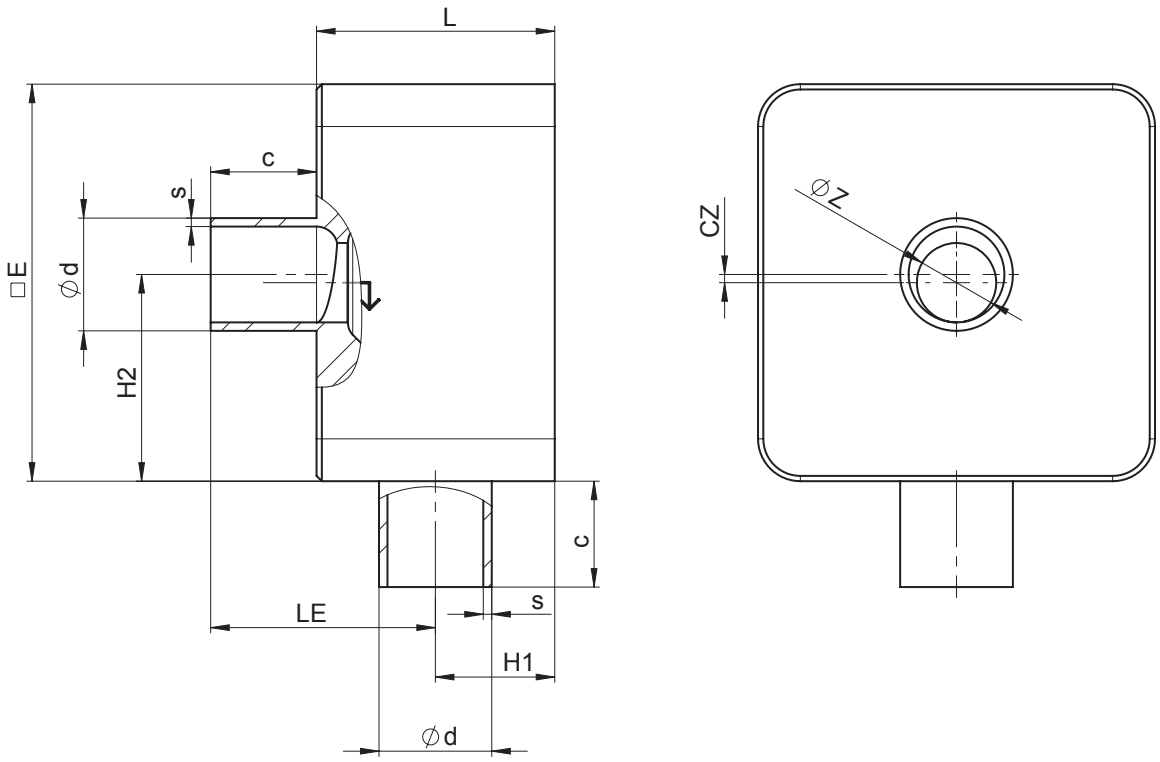

AG	DN	Connection type code 60 [1]										
		Seat size (code)	L	□E	c	Øz	LE	H1	H2	cz	Ød	s
2	8	A	45.0	75.0	20.0	2.0	46.3	18.7	41.65	4.15	13.5	1.6
		B	45.0	75.0	20.0	4.0	46.3	18.7	40.65	3.15	13.5	1.6
		C	45.0	75.0	20.0	6.0	46.3	18.7	39.65	2.15	13.5	1.6
	10	A	45.0	75.0	20.0	2.0	44.5	20.5	43.50	6.00	17.2	1.6
		B	45.0	75.0	20.0	4.0	44.5	20.5	42.50	5.00	17.2	1.6
		C	45.0	75.0	20.0	6.0	44.5	20.5	41.50	4.00	17.2	1.6
		D	45.0	75.0	20.0	8.0	44.5	20.5	40.50	3.00	17.2	1.6
	15	A	45.0	75.0	20.0	2.0	42.4	22.6	45.55	8.05	21.3	1.6
		B	45.0	75.0	20.0	4.0	42.4	22.6	44.55	7.05	21.3	1.6
		C	45.0	75.0	20.0	6.0	42.4	22.6	43.55	6.05	21.3	1.6
		D	45.0	75.0	20.0	8.0	42.4	22.6	42.55	5.05	21.3	1.6
		E	45.0	75.0	20.0	10.0	42.4	22.6	41.55	4.05	21.3	1.6
		G	45.0	75.0	20.0	15.0	42.4	22.6	39.05	1.55	21.3	1.6
3	20	H	55.0	95.0	25.0	20.0	54.6	25.4	49.40	1.90	29.6	1.6
	25	H	55.0	95.0	25.0	20.0	54.6	28.4	52.40	4.90	33.7	2.0
		J	55.0	95.0	25.0	25.0	51.6	28.4	49.90	2.40	33.7	2.0

Dimensions in mm
AG = actuator size

1) **Connection type**
Code 60: Spigot ISO 1127/DIN EN 10357 series C (2014 edition)/DIN 11866 series B

8.2.7 Spigot without bypass code 60

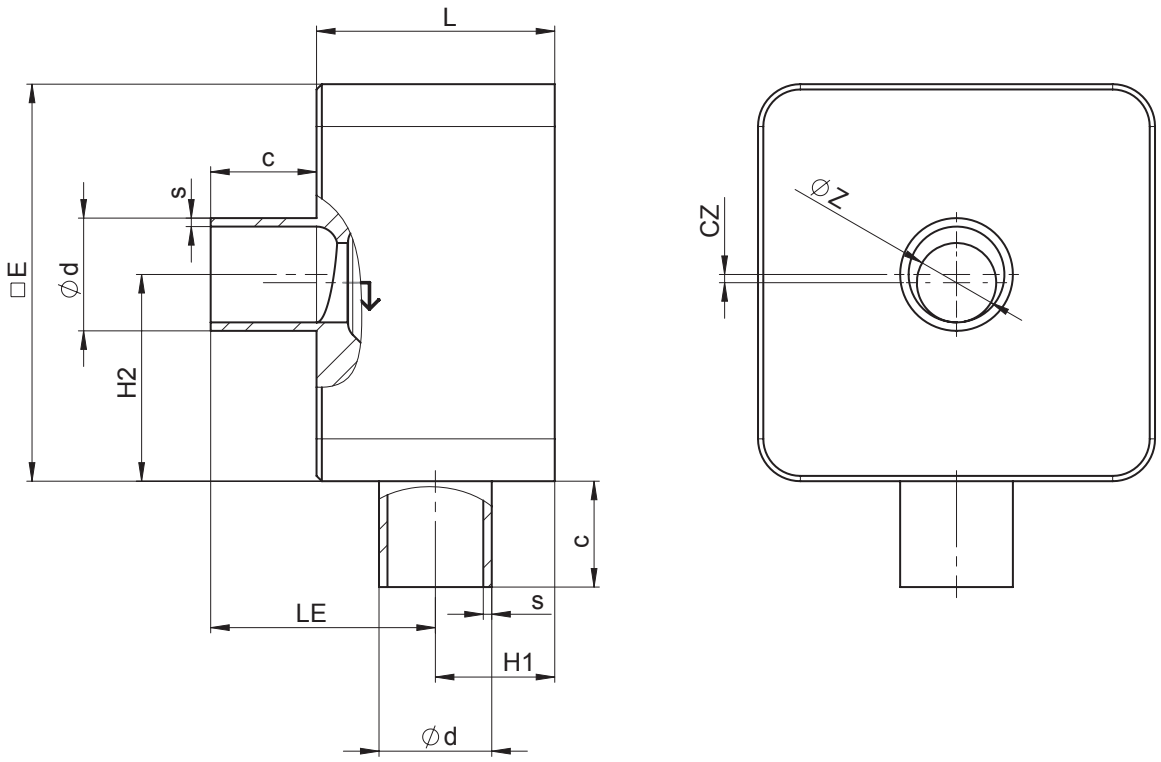

AG	DN	Connection type code 60 [1]										
		Seat size (code)	L	□E	c	Øz	LE	H1	H2	cz	Ød	s
4	32	K	73.0	112.0	25.0	32.0	65.8	32.8	52.8	3.2	42.4	2.0
	40	K	73.0	112.0	25.0	32.0	62.2	35.8	49.85	6.15	48.3	2.0
		M	73.0	112.0	25.0	38.0	62.2	35.8	52.85	3.15	48.3	2.0
5	50	N	84.0	140.0	30.0	50.0	72.3	41.7	93.15	3.15	60.3	2.0

Dimensions in mm
AG = actuator size

1) **Connection type**
Code 60: Spigot ISO 1127/DIN EN 10357 series C (2014 edition)/DIN 11866 series B

8.2.8 Spigot with bypass code 0

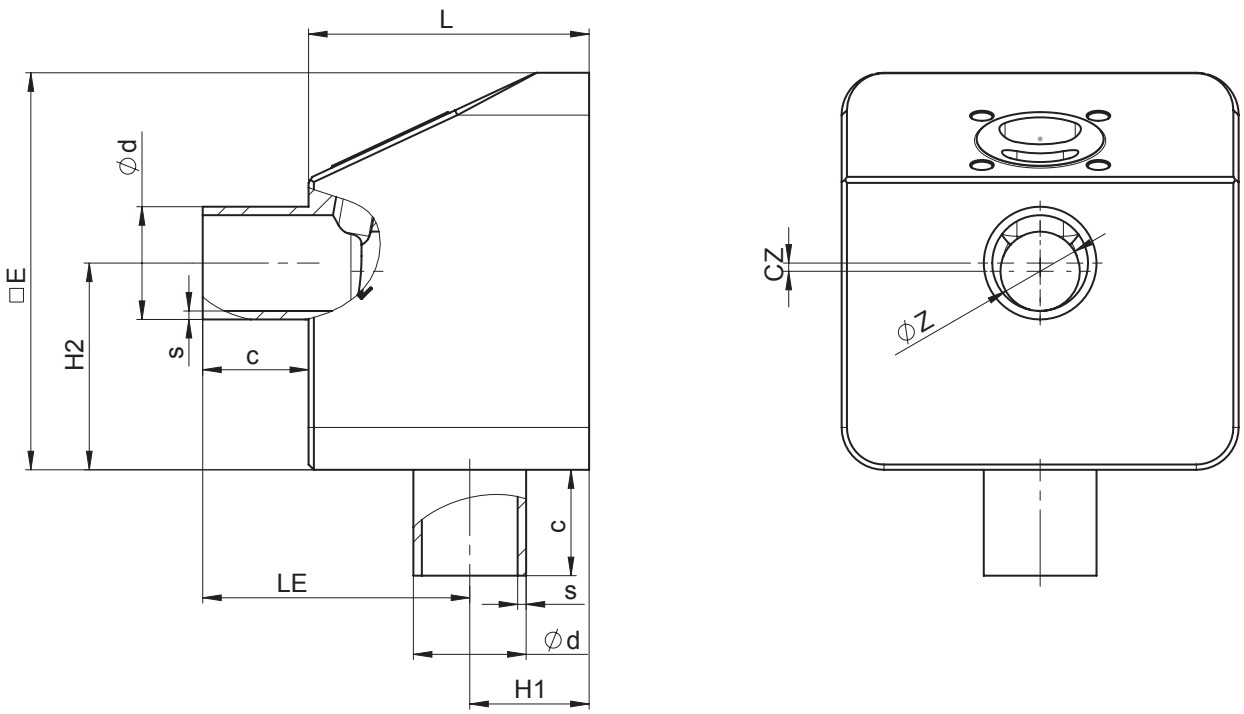

AG	DN	Connection type code 0 [1]										
		Seat size (code)	L	□E	c	Øz	LE	H1	H2	cz	Ød	s
2	15	A	53.0	75.0	20.0	2.0	52.0	21.0	44.0	6.5	18.0	1.5
		B	53.0	75.0	20.0	4.0	52.0	21.0	43.0	5.5	18.0	1.5
		C	53.0	75.0	20.0	6.0	52.0	21.0	42.0	4.5	18.0	1.5
		D	53.0	75.0	20.0	8.0	52.0	21.0	41.0	3.5	18.0	1.5
		E	53.0	75.0	20.0	10.0	52.0	21.0	40.0	2.5	18.0	1.5
		G	53.0	75.0	20.0	15.0	52.0	21.0	37.5	-	18.0	1.5

Dimensions in mm
AG = actuator size

1) **Connection type**
Code 0: Spigot DIN

8.2.9 Spigot with bypass code 17

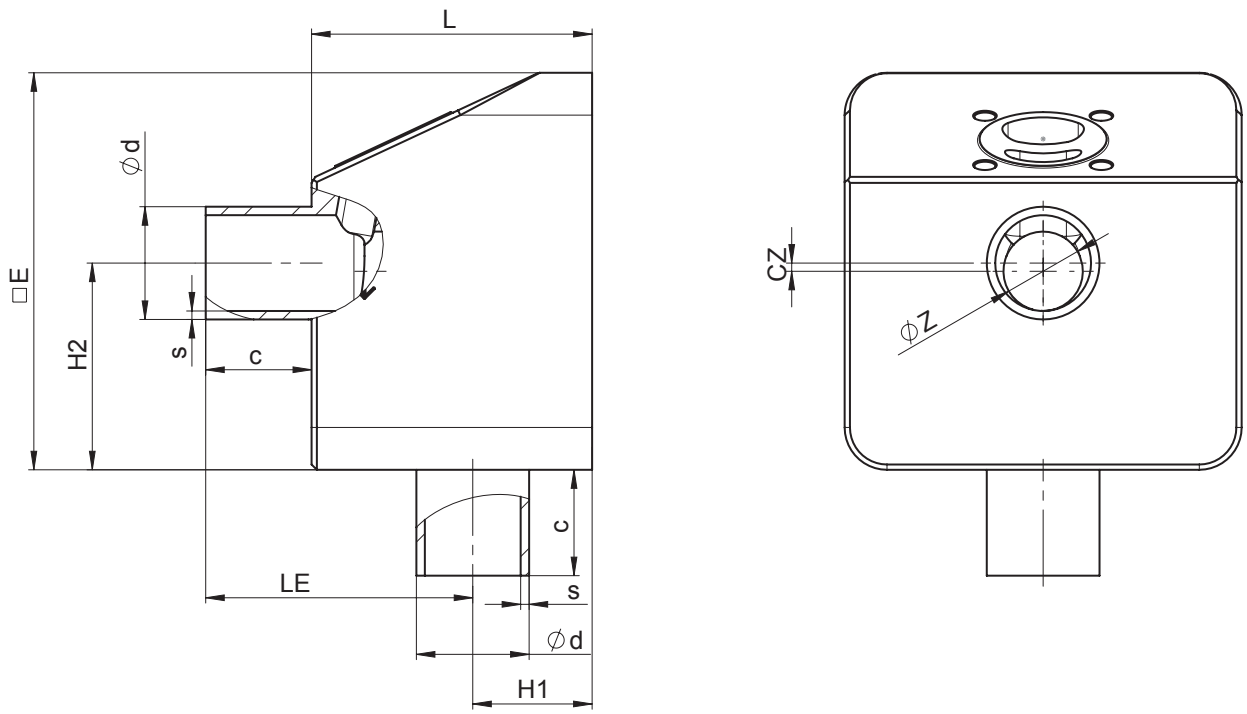

AG	DN	Connection type code 17 [1]										
		Seat size (code)	L	□E	c	Øz	LE	H1	H2	cz	Ød	s
2	8	A	53.0	75.0	20.0	2.0	55.5	17.5	40.5	3.0	10.0	1.0
		B	53.0	75.0	20.0	4.0	55.5	17.5	39.5	2.0	10.0	1.0
		C	53.0	75.0	20.0	6.0	55.5	17.5	38.5	1.0	10.0	1.0
	10	A	53.0	75.0	20.0	2.0	54.5	18.5	41.5	4.0	13.0	1.5
		B	53.0	75.0	20.0	4.0	54.5	18.5	40.5	3.0	13.0	1.5
		C	53.0	75.0	20.0	6.0	54.5	18.5	39.5	2.0	13.0	1.5
		D	53.0	75.0	20.0	8.0	54.5	18.5	38.5	1.0	13.0	1.5
	15	A	53.0	75.0	20.0	2.0	51.5	21.5	44.5	7.0	19.0	1.5
		B	53.0	75.0	20.0	4.0	51.5	21.5	43.5	6.0	19.0	1.5
		C	53.0	75.0	20.0	6.0	51.5	21.5	42.5	5.0	19.0	1.5
		D	53.0	75.0	20.0	8.0	51.5	21.5	41.5	4.0	19.0	1.5
		E	53.0	75.0	20.0	10.0	51.5	21.5	40.5	3.0	19.0	1.5
		G	53.0	75.0	20.0	15.0	51.5	21.5	38.0	0.5	19.0	1.5

Dimensions in mm
AG = actuator size

1) **Connection type**
Code 17: Spigot EN 10357 series A/DIN 11866 series A formerly DIN 11850 series 2

8.2.10 Spigot with bypass code 59

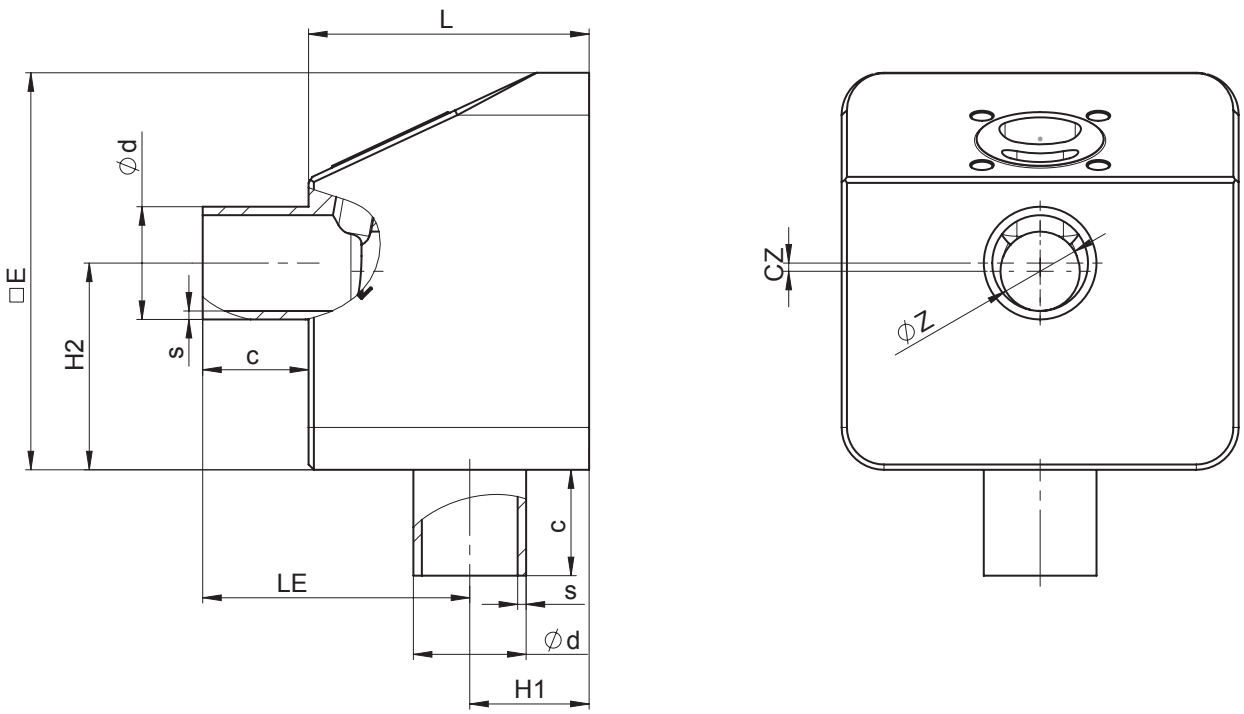

AG	DN	Connection type code 59 [1]										
		Seat size (code)	L	□E	c	Øz	LE	H1	H2	cz	Ød	s
2	15	A	53.0	75.0	20.0	2.0	54.8	18.2	41.20	3.70	12.70	1.65
		B	53.0	75.0	20.0	4.0	54.8	18.2	40.20	2.70	12.70	1.65
		C	53.0	75.0	20.0	6.0	54.8	18.2	39.20	1.70	12.70	1.65
		D	53.0	75.0	20.0	8.0	54.8	18.2	38.20	0.70	12.70	1.65
	20	A	53.0	75.0	20.0	2.0	51.6	21.4	44.38	3.70	12.70	1.65
		B	53.0	75.0	20.0	4.0	51.6	21.4	43.38	2.70	12.70	1.65
		C	53.0	75.0	20.0	6.0	51.6	21.4	42.38	1.70	12.70	1.65
		D	53.0	75.0	20.0	8.0	51.6	21.4	41.38	0.70	12.70	1.65
		E	53.0	75.0	20.0	10.0	51.6	21.4	40.38	2.88	19.05	1.65
		G	53.0	75.0	20.0	15.0	51.6	21.4	37.88	0.38	19.05	1.65

Dimensions in mm
AG = actuator size

1) **Connection type**
Code 59: Spigot ASME BPE/DIN EN 10357 series C (from 2022 edition)/DIN 11866 series C

8.2.11 Spigot with bypass code 60

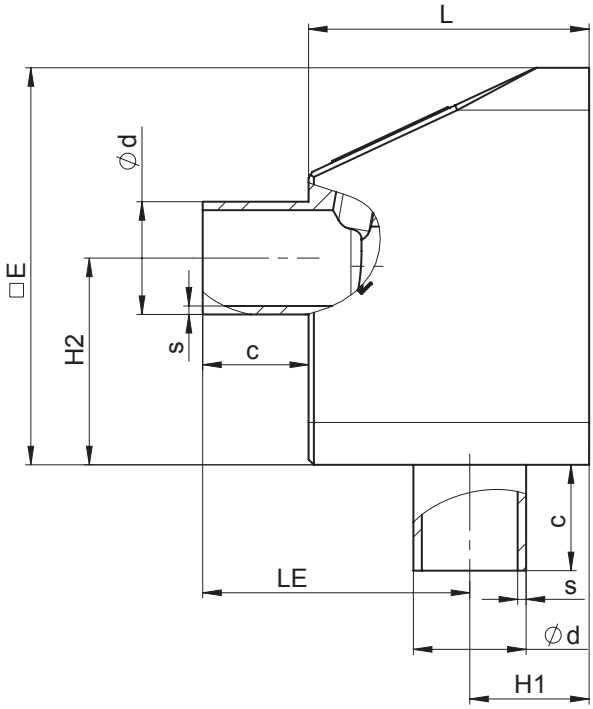

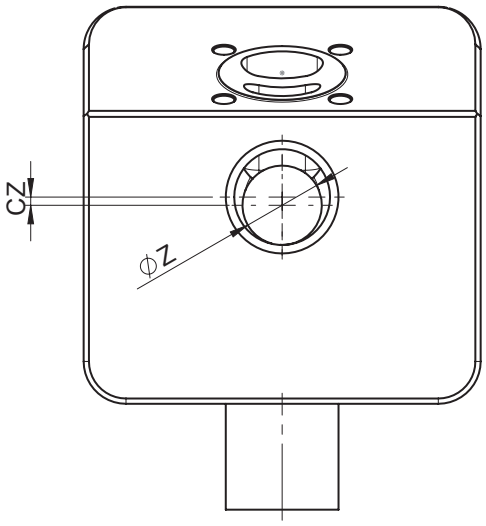

AG	DN	Connection type code 60 [1]										
		Seat size (code)	L	□E	c	Øz	LE	H1	H2	cz	Ød	s
2	8	A	53.0	75.0	20.0	2.0	54.3	18.7	41.65	4.15	13.5	1.6
		B	53.0	75.0	20.0	4.0	54.3	18.7	40.65	3.15	13.5	1.6
		C	53.0	75.0	20.0	6.0	54.3	18.7	39.65	2.15	13.5	1.6
	10	A	53.0	75.0	20.0	2.0	52.5	20.7	43.50	6.00	17.2	1.6
		B	53.0	75.0	20.0	4.0	52.5	20.7	42.50	5.00	17.2	1.6
		C	53.0	75.0	20.0	6.0	52.5	20.5	41.50	4.00	17.2	1.6
		D	53.0	75.0	20.0	8.0	52.5	20.5	40.50	3.00	17.2	1.6
	15	A	53.0	75.0	20.0	2.0	50.4	22.6	45.55	8.05	21.3	1.6
		B	53.0	75.0	20.0	4.0	50.4	22.6	44.55	7.05	21.3	1.6
		C	53.0	75.0	20.0	6.0	50.4	22.6	43.55	6.05	21.3	1.6
		D	53.0	75.0	20.0	8.0	50.4	22.6	42.55	5.05	21.3	1.6
		E	53.0	75.0	20.0	10.0	50.4	22.6	41.55	4.05	21.3	1.6
		G	53.0	75.0	20.0	15.0	50.4	22.6	39.05	1.55	21.3	1.6

Dimensions in mm
AG = actuator size

1) **Connection type**
Code 60: Spigot ISO 1127/DIN EN 10357 series C (2014 edition)/DIN 11866 series B

8.2.12 Clamp without bypass code 82

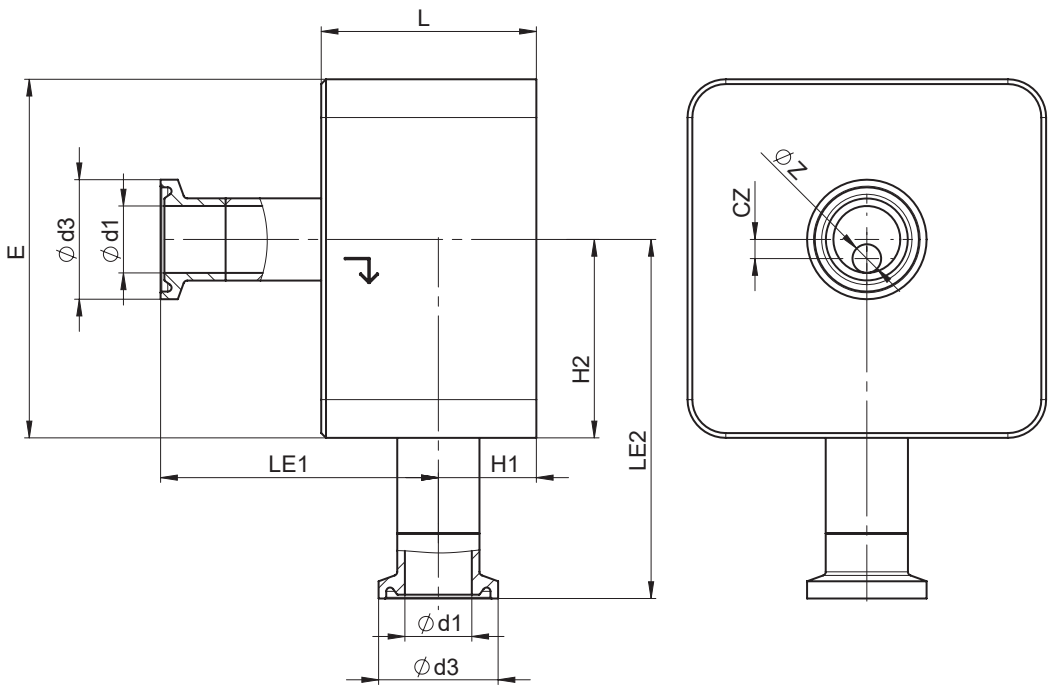

AG	DN	Connection type code 82 [1]										
		Seat size (code)	L	□E	Øz	LE1	LE2	H1	H2	cz	Ød1	Ød3
2	8	A	45.0	75.0	2.0	59.3	74.65	18.7	41.65	4.15	10.3	25.4
		B	45.0	75.0	4.0	59.3	73.65	18.7	40.65	3.15	10.3	25.4
		C	45.0	75.0	6.0	59.3	72.65	18.7	39.65	2.15	10.3	25.4
	10	A	45.0	75.0	2.0	57.5	76.50	20.5	43.50	6.00	14.0	25.4
		B	45.0	75.0	4.0	57.5	75.50	20.5	42.50	5.00	14.0	25.4
		C	45.0	75.0	6.0	57.5	74.50	20.5	41.50	4.00	14.0	25.4
		D	45.0	75.0	8.0	57.5	73.50	20.5	40.50	3.00	14.0	25.4
	15	A	45.0	75.0	2.0	55.4	78.55	22.6	45.55	8.05	18.1	50.5
		B	45.0	75.0	4.0	55.4	77.55	22.6	44.55	7.05	18.1	50.5
		C	45.0	75.0	6.0	55.4	76.55	22.6	43.55	6.05	18.1	50.5
		D	45.0	75.0	8.0	55.4	75.55	22.6	42.55	5.05	18.1	50.5
		E	45.0	75.0	10.0	55.4	74.55	22.6	41.55	4.05	18.1	50.5
		G	45.0	75.0	15.0	55.4	72.05	22.6	39.05	1.55	18.1	50.5
3	20	H	55.0	95.0	20.0	66.0	87.40	27.0	49.40	1.90	19.0	50.5
	25	H	55.0	95.0	20.0	62.6	90.40	30.4	52.40	4.90	25.0	50.5
		J	55.0	95.0	25.0	62.6	87.90	30.4	49.90	2.40	25.0	50.5

Dimensions in mm
AG = actuator size

1) **Connection type**
Code 82: Clamp DIN 32676 series B

8.2.13 Clamp without bypass code 82

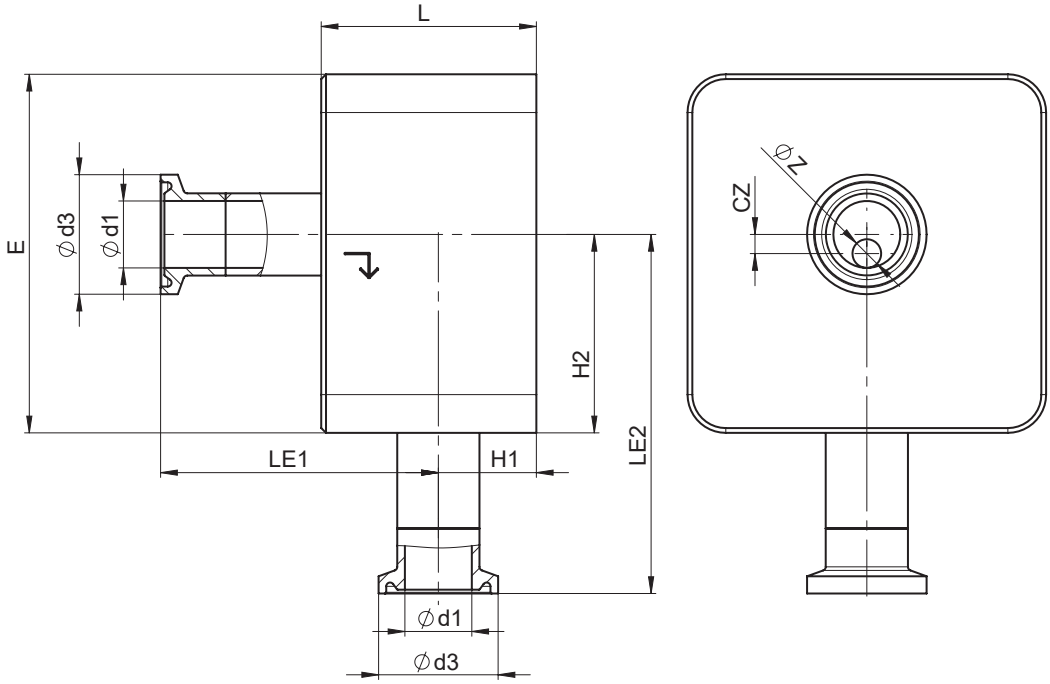

AG	DN	Connection type code 82 [1]										
		Seat size (code)	L	□E	Øz	LE1	LE2	H1	H2	cz	Ød1	Ød3
4	**32**	**K**	73.0	112.0	32.0	78.8	90.8	32.8	52.8	3.2	38.4	64.0
	40	**K**	73.0	112.0	32.0	75.2	87.85	35.8	49.85	6.15	44.3	64.0
		M	73.0	112.0	38.0	75.2	90.85	35.8	52.85	3.15	44.3	64.0
5	**50**	**N**	84.0	140.0	50.0	85.3	136.15	41.7	93.15	3.15	56.3	77.5

Dimensions in mm
AG = actuator size

1) **Connection type**
Code 82: Clamp DIN 32676 series B

8.2.14 Clamp without bypass code 86

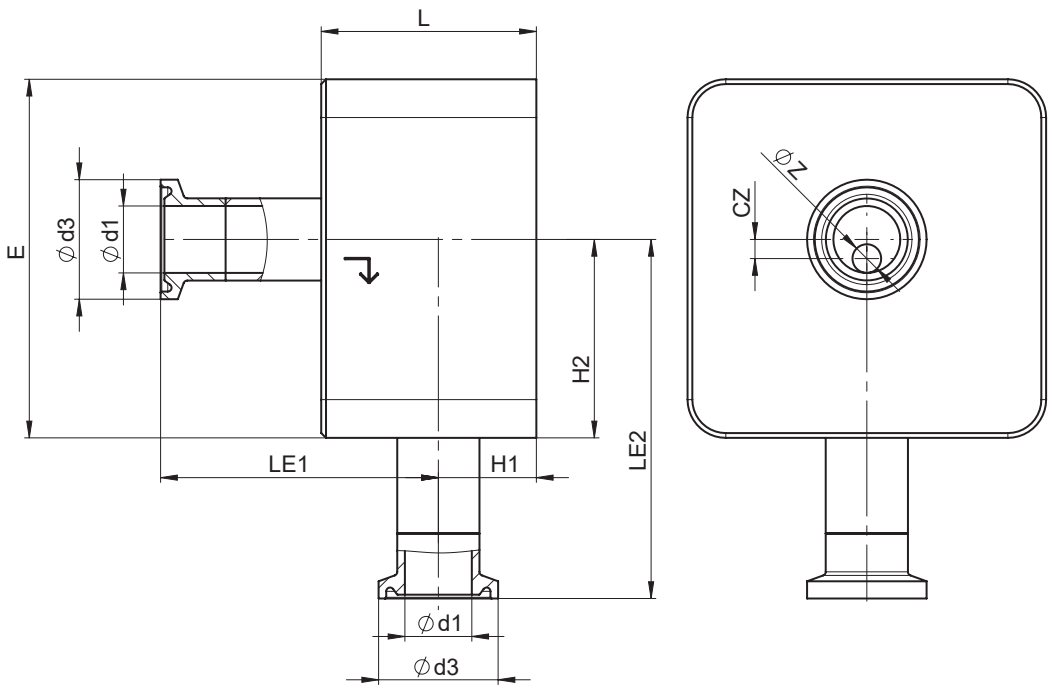

AG	DN	Connection type code 86 [1]										
		Seat size (code)	L	□E	Øz	LE1	LE2	H1	H2	cz	Ød1	Ød3
2	8	A	45.0	75.0	2.0	60.5	73.5	17.5	40.5	3.0	8.0	25.0
		B	45.0	75.0	4.0	60.5	72.5	17.5	39.5	2.0	8.0	25.0
		C	45.0	75.0	6.0	60.5	71.5	17.5	38.5	1.0	8.0	25.0
	10	A	45.0	75.0	2.0	59.5	74.5	18.5	41.5	4.0	10.0	34.0
		B	45.0	75.0	4.0	59.5	73.5	18.5	40.5	3.0	10.0	34.0
		C	45.0	75.0	6.0	59.5	72.5	18.5	39.5	2.0	10.0	34.0
		D	45.0	75.0	8.0	59.5	71.5	18.5	38.5	1.0	10.0	34.0
	15	A	45.0	75.0	2.0	56.5	77.5	21.5	44.5	7.0	16.0	34.0
		B	45.0	75.0	4.0	56.5	76.5	21.5	43.5	6.0	16.0	34.0
		C	45.0	75.0	6.0	56.5	75.5	21.5	42.5	5.0	16.0	34.0
		D	45.0	75.0	8.0	56.5	74.5	21.5	41.5	4.0	16.0	34.0
		E	45.0	75.0	10.0	56.5	73.5	21.5	40.5	3.0	16.0	34.0
		G	45.0	75.0	15.0	56.5	71.0	21.5	38.0	0.5	16.0	34.0
3	20	H	55.0	95.0	20.0	69.5	85.5	23.0	47.5	0.0	20.0	34.0
	25	H	55.0	95.0	20.0	65.0	88.0	28.1	50.0	2.5	26.0	50.5
		J	55.0	95.0	25.0	65.0	88.5	28.1	47.5	0.0	26.0	50.5

Dimensions in mm
AG = actuator size

1) **Connection type**
Code 86: Clamp DIN 32676 series A

8.2.15 Clamp without bypass code 86

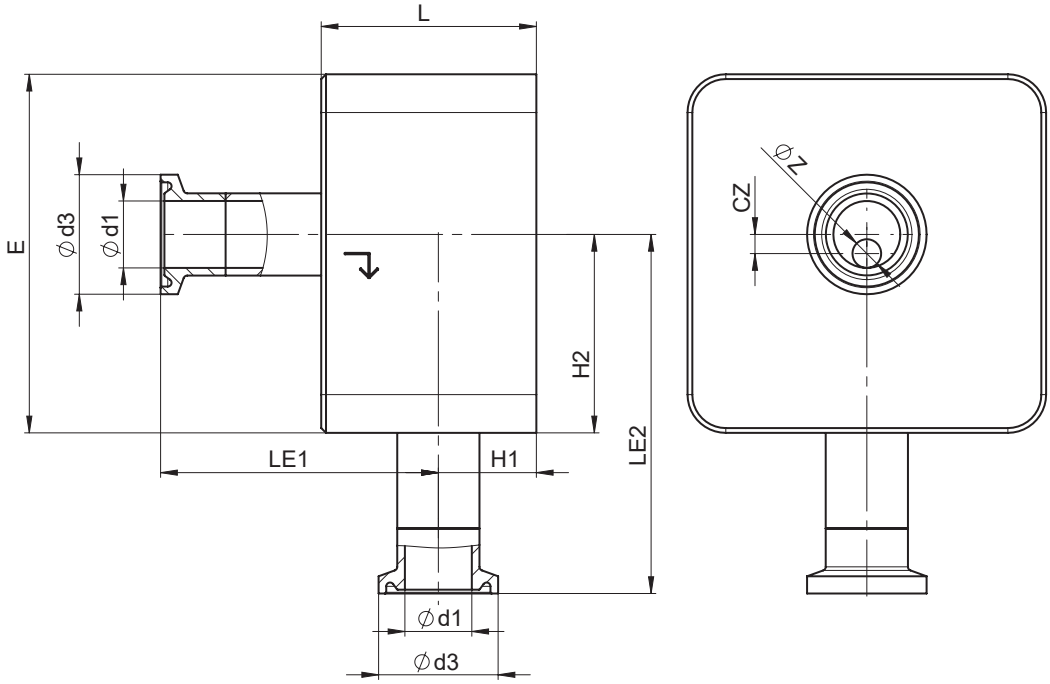

AG	DN	Connection type code 86 [1]										
		Seat size (code)	L	□E	Øz	LE1	LE2	H1	H2	cz	Ød1	Ød3
4	**32**	**K**	73.0	112.0	32.0	80.0	92.5	31.0	54.5	1.5	32.0	50.5
	40	**K**	73.0	112.0	32.0	78.4	91.0	32.6	53.0	3.0	38.0	50.5
		M	73.0	112.0	38.0	78.4	94.0	32.6	56.0	0.0	38.0	50.5
5	**50**	**N**	84.0	140.0	50.0	88.4	133.0	38.6	90.0	0.0	50.0	64.0

Dimensions in mm
AG = actuator size

1) **Connection type**
Code 86: Clamp DIN 32676 series A

8.2.16 Clamp without bypass code 88

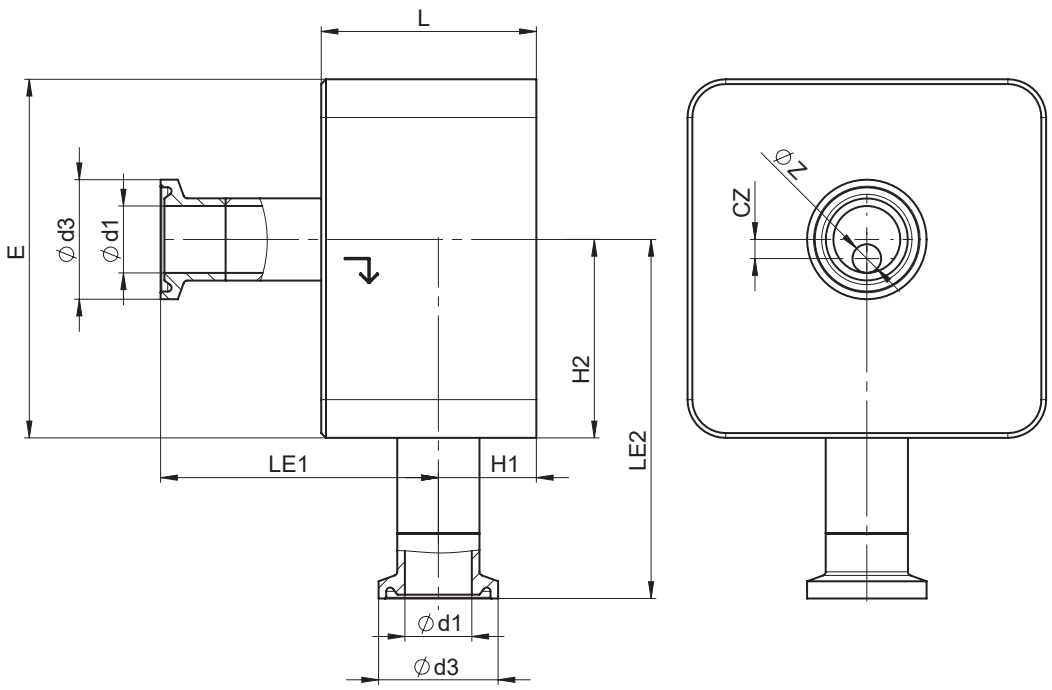

AG	DN	Connection type code 88 [1]										
		Seat size (code)	L	□E	Øz	LE1	LE2	H1	H2	cz	Ød1	Ød3
2	15	A	45.0	75.0	2.0	59.8	74.20	18.2	41.20	3.70	9.40	25.0
		B	45.0	75.0	4.0	59.8	73.20	18.2	40.20	2.70	9.40	25.0
		C	45.0	75.0	6.0	59.8	72.20	18.2	39.20	1.70	9.40	25.0
		D	45.0	75.0	8.0	59.8	71.20	18.2	38.20	0.70	9.40	25.0
	20	A	45.0	75.0	2.0	56.5	77.38	21.4	44.38	6.88	15.75	25.0
		B	45.0	75.0	4.0	56.5	76.38	21.4	43.38	5.88	15.75	25.0
		C	45.0	75.0	6.0	56.5	75.38	21.4	42.38	4.88	15.75	25.0
		D	45.0	75.0	8.0	56.5	74.38	21.4	41.38	3.88	15.75	25.0
		E	45.0	75.0	10.0	56.5	73.38	21.4	40.38	2.88	15.75	25.0
		G	45.0	75.0	15.0	56.5	70.88	21.4	37.88	0.38	15.75	25.0
3	25	H	55.0	95.0	20.0	66.8	87.60	26.3	48.60	1.10	22.10	50.5

Dimensions in mm
AG = actuator size

1) **Connection type**
Code 88: Clamp ASME BPE, for pipe ASME BPE

8.2.17 Clamp without bypass code 88

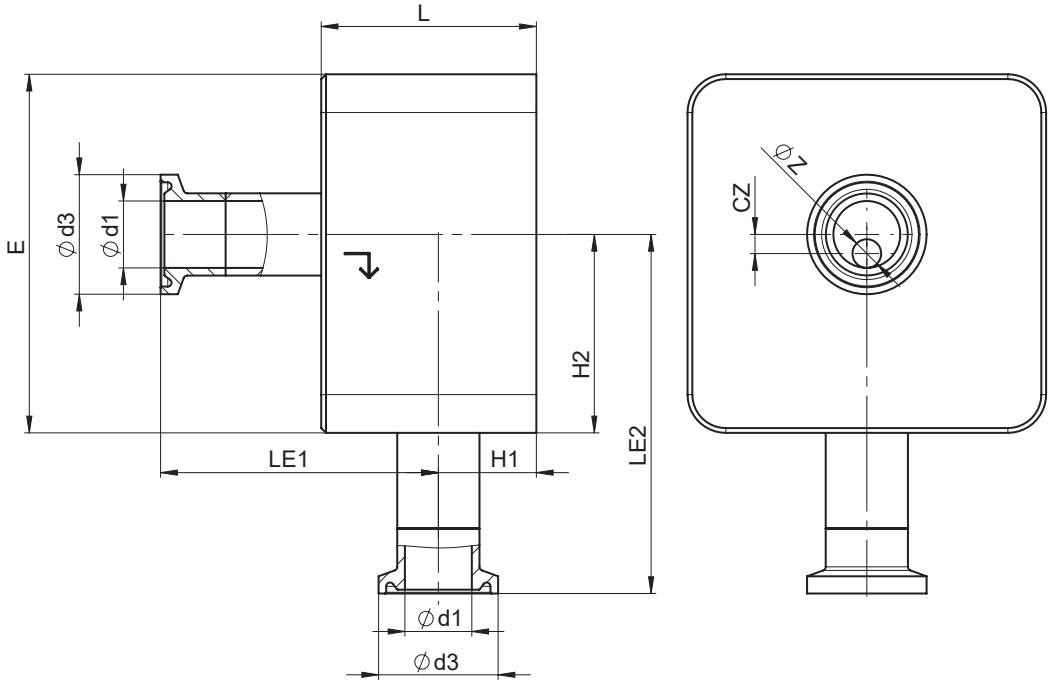

AG	DN	Connection type code 88 [1]										
		Seat size (code)	L	□E	Øz	LE1	LE2	H1	H2	cz	Ød1	Ød3
4	**40**	**K**	73.0	112.0	32.0	80.1	92.6	31.0	54.6	1.4	34.8	50.5
	50	**K**	73.0	112.0	32.0	72.7	86.25	37.4	48.25	7.75	47.5	64.0
		M	73.0	112.0	38.0	72.7	89.25	37.4	51.25	4.75	47.5	64.0
5	**65**	**N**	84.0	140.0	50.0	83.1	127.6	43.7	84.9	5.1	60.2	77.5

Dimensions in mm
AG = actuator size

1) **Connection type**
Code 88: Clamp ASME BPE, for pipe ASME BPE

8.2.18 Clamp with bypass code 82

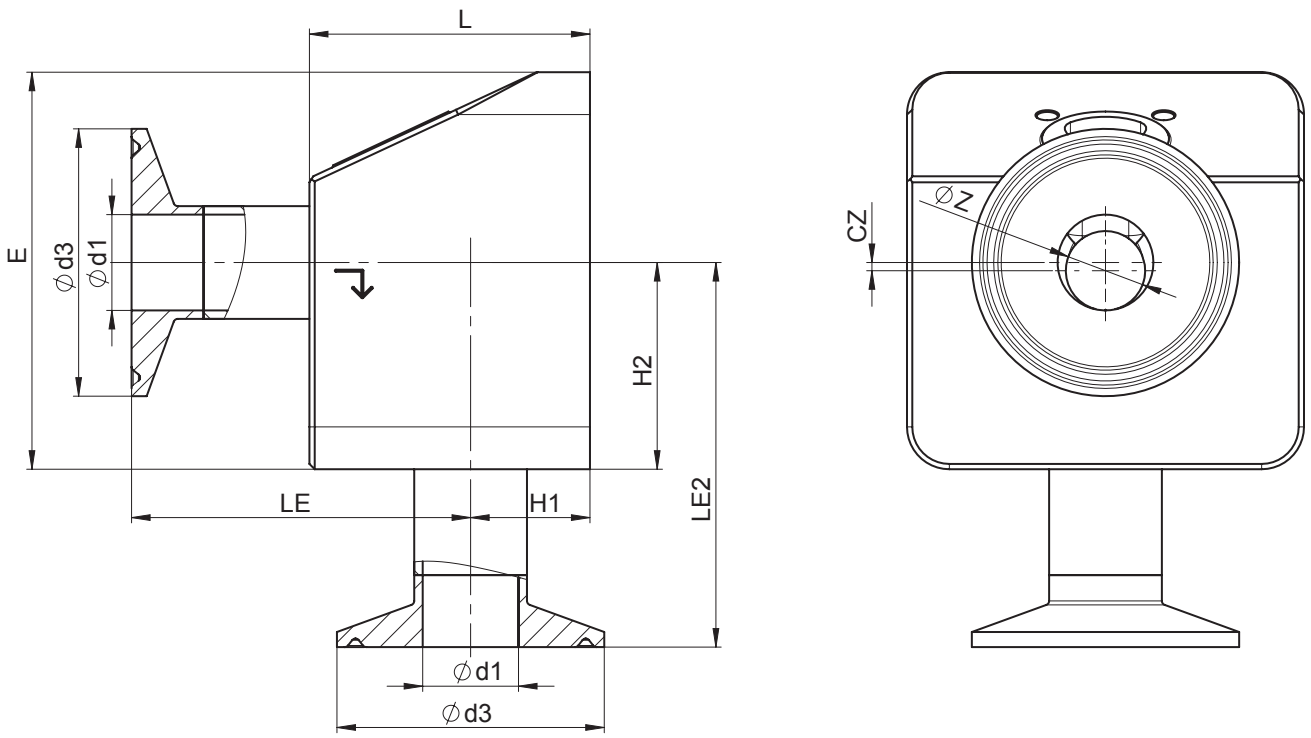

AG	DN	Connection type code 82 [1]										
		Seat size (code)	L	□E	Øz	LE1	LE2	H1	H2	cz	Ød1	Ød3
2	8	A	53.0	75.0	2.0	67.3	74.65	18.7	41.65	4.15	10.3	25.4
		B	53.0	75.0	4.0	67.3	73.65	18.7	40.65	3.15	10.3	25.4
		C	53.0	75.0	6.0	67.3	72.65	18.7	39.65	2.15	10.3	25.4
	10	A	53.0	75.0	2.0	65.5	76.50	20.5	43.50	6.00	14.0	25.4
		B	53.0	75.0	4.0	65.5	75.50	20.5	42.50	5.00	14.0	25.4
		C	53.0	75.0	6.0	65.5	74.50	20.5	41.5	4.00	14.0	25.4
		D	53.0	75.0	8.0	65.5	73.50	20.5	40.5	3.00	14.0	25.4
	15	A	53.0	75.0	2.0	63.4	78.55	22.6	45.55	8.05	18.1	50.5
		B	53.0	75.0	4.0	63.4	77.55	22.6	44.55	7.05	18.1	50.5
		C	53.0	75.0	6.0	63.4	76.55	22.6	43.55	6.05	18.1	50.5
		D	53.0	75.0	8.0	63.4	75.55	22.6	42.55	5.05	18.1	50.5
		E	53.0	75.0	10.0	63.4	74.55	22.6	41.55	4.05	18.1	50.5
		G	53.0	75.0	15.0	63.4	72.05	22.6	39.05	1.55	18.1	50.5

Dimensions in mm
AG = actuator size

1) **Connection type**
Code 82: Clamp DIN 32676 series B

8.2.19 Clamp with bypass code 86

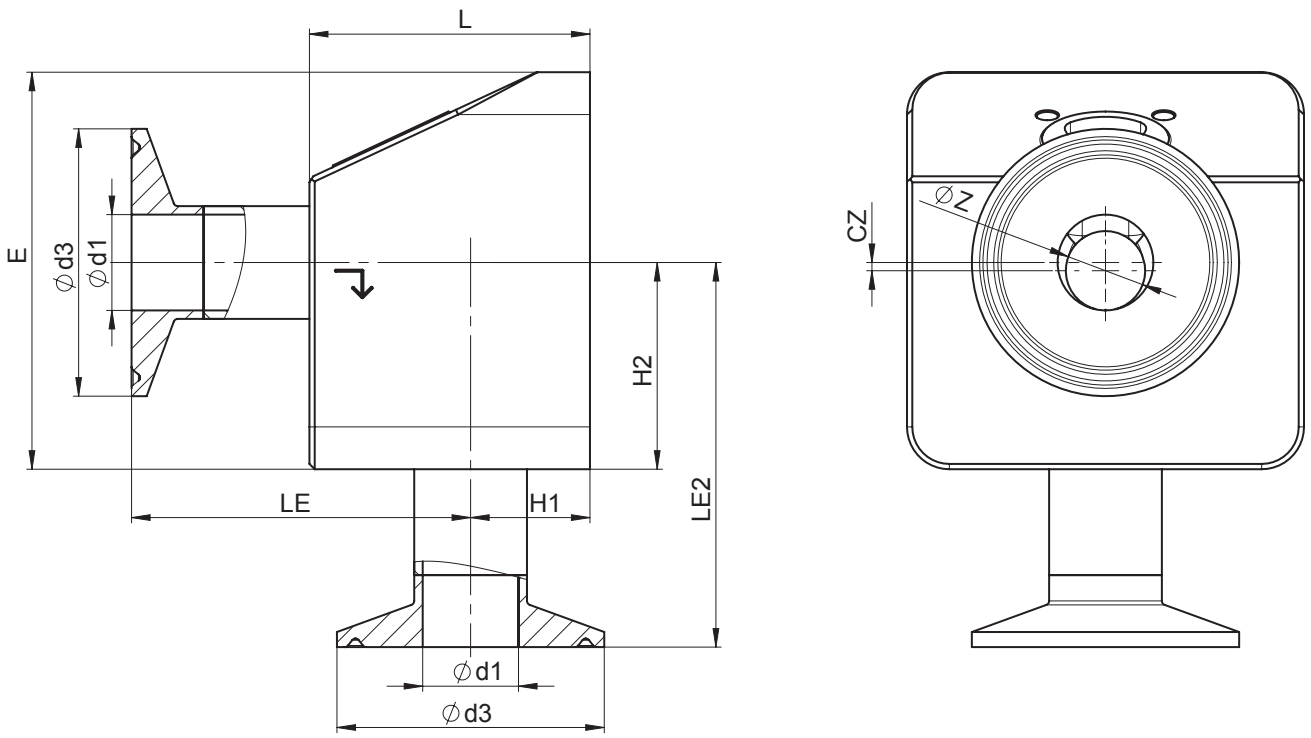

AG	DN	Connection type code 86 [1]										
		Seat size (code)	L	□E	Øz	LE1	LE2	H1	H2	cz	Ød1	Ød3
2	8	A	53.0	75.0	2.0	68.5	73.5	17.5	40.5	3.0	8.0	25.0
		B	53.0	75.0	4.0	68.5	72.5	17.5	39.5	2.0	8.0	25.0
		C	53.0	75.0	6.0	68.5	71.5	17.5	38.5	1.0	8.0	25.0
	10	A	53.0	75.0	2.0	67.5	74.5	18.5	41.5	4.0	10.0	34.0
		B	53.0	75.0	4.0	67.5	73.5	18.5	40.5	3.0	10.0	34.0
		C	53.0	75.0	6.0	67.5	72.5	18.5	39.5	2.0	10.0	34.0
		D	53.0	75.0	8.0	67.5	71.5	18.5	38.5	1.0	10.0	34.0
	15	A	53.0	75.0	2.0	64.5	77.5	21.5	44.5	7.0	16.0	34.0
		B	53.0	75.0	4.0	64.5	76.5	21.5	43.5	6.0	16.0	34.0
		C	53.0	75.0	6.0	64.5	75.5	21.5	42.5	5.0	16.0	34.0
		D	53.0	75.0	8.0	64.5	74.5	21.5	41.5	4.0	16.0	34.0
		E	53.0	75.0	10.0	64.5	73.5	21.5	40.5	3.0	16.0	34.0
		G	53.0	75.0	15.0	64.5	71.0	21.5	38.0	0.5	16.0	34.0

Dimensions in mm
AG = actuator size

1) **Connection type**
Code 86: Clamp DIN 32676 series A

8.2.20 Clamp with bypass code 88

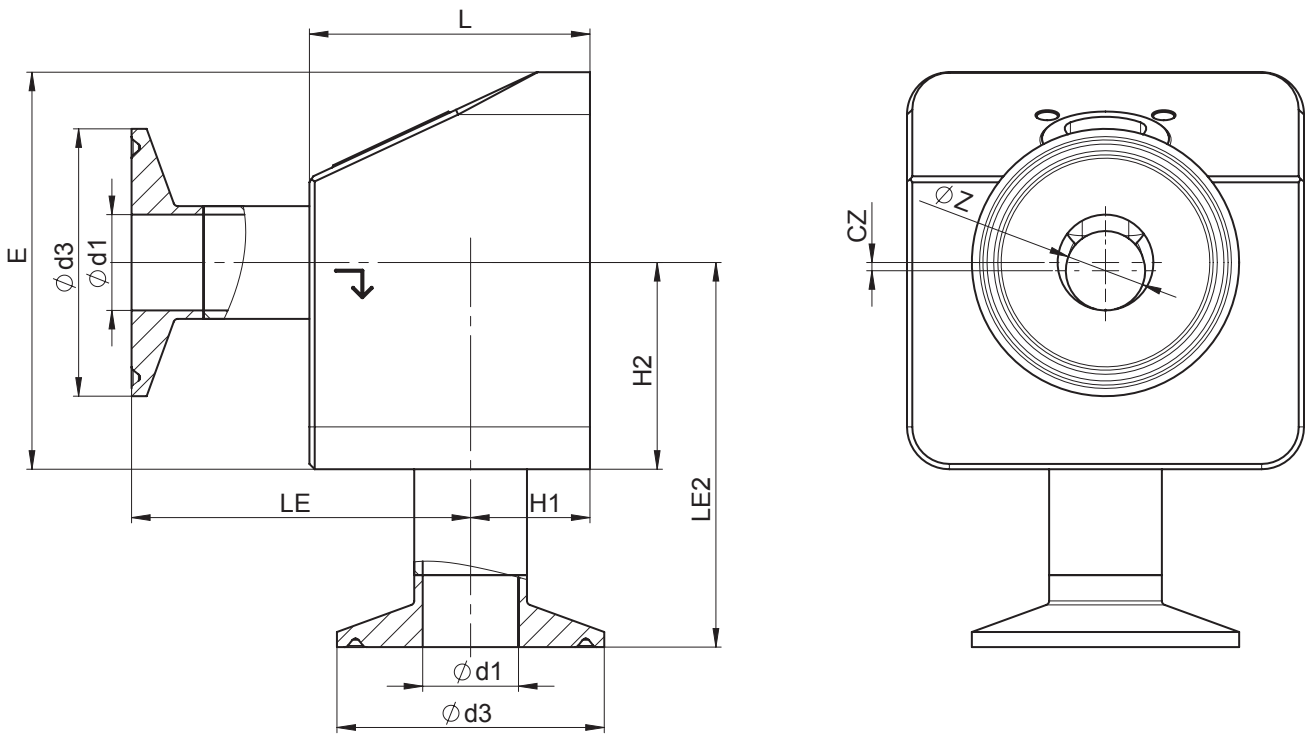

AG	DN	Connection type code 88 [1]										
		Seat size (code)	L	□E	Øz	LE1	LE2	H1	H2	cz	Ød1	Ød3
2	15	A	53.0	75.0	2.0	67.8	74.20	18.2	41.20	3.70	9.40	25.0
		B	53.0	75.0	4.0	67.8	73.20	18.2	40.20	2.70	9.40	25.0
		C	53.0	75.0	6.0	67.8	72.20	18.2	39.20	1.70	9.40	25.0
		D	53.0	75.0	8.0	67.8	71.20	18.2	38.20	0.70	9.40	25.0
	20	A	53.0	75.0	2.0	64.6	77.38	21.4	44.38	6.88	15.75	25.0
		B	53.0	75.0	4.0	64.6	76.38	21.4	43.38	5.88	15.75	25.0
		C	53.0	75.0	6.0	64.6	75.38	21.4	42.38	4.88	15.75	25.0
		D	53.0	75.0	8.0	64.6	74.38	21.4	41.38	3.88	15.75	25.0
		E	53.0	75.0	10.0	64.6	73.38	21.4	40.38	2.88	15.75	25.0
		G	53.0	75.0	15.0	64.6	70.88	21.4	37.88	0.38	15.75	25.0

Dimensions in mm
AG = actuator size

1) **Connection type**
Code 88: Clamp ASME BPE, for pipe ASME BPE

9 Manufacturer's information

The controller required for valve operation is not included in the scope of delivery.

9.1 Delivery

- Check that all parts are present and check for any damage immediately upon receipt.

The product's performance is tested at the factory. The scope of delivery is apparent from the dispatch documents and the design from the order number.

9.2 Packaging

The product is packaged in a cardboard box which can be recycled as paper.

9.3 Transport

1. Only transport the product by suitable means. Do not drop. Handle carefully.
2. After the installation dispose of transport packaging material according to relevant local or national disposal regulations / environmental protection laws.

9.4 Storage

1. Store the product free from dust and moisture in its original packaging.
2. Avoid UV rays and direct sunlight.
3. Do not exceed the maximum storage temperature (see chapter "Technical data").
4. Do not store solvents, chemicals, acids, fuels or similar fluids in the same room as GEMÜ products and their spare parts.
5. Close the compressed air connections with protection caps or sealing plugs.

10 Installation in piping

10.1 Installation location

⚠ CAUTION

- Do not apply external force to the valve.
- Choose the installation location so that the valve cannot be used as a foothold.
- Lay the pipeline so that the valve body is protected against transverse and bending forces, and also vibrations and tension.
- Only install the valve between matching aligned pipes.

NOTICE

- Install the actuator horizontally for optimized draining.
- The flow direction of the working medium is indicated by an arrow on the valve body.

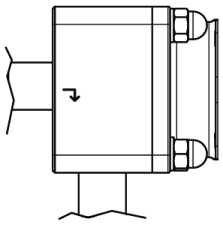

in closed and open position
Actuator horizontal

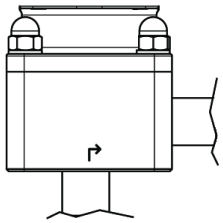

in open position
Actuator horizontal or vertical

Control range

We recommend designing the valves in such a way that the control range is within an opening stroke of 20% to 90% of the control valve.

10.2 Preparing for installation

⚠ WARNING

The equipment is subject to pressure!

- ▶ Risk of severe injury or death
- Depressurize the plant or plant component.
- Completely drain the plant or plant component.

⚠ WARNING

Corrosive chemicals!

- ▶ Risk of caustic burns
- Wear appropriate protective gear.
- Completely drain the plant.

⚠ CAUTION

Hot plant components!

- ▶ Burns
- Only work on plant that has cooled down.
- Wear protective gear.

⚠ CAUTION

Use as step!

- ▶ Damage to the product
- ▶ Risk of slipping-off
- Choose the installation location so that the product cannot be used as a foothold.
- Do not use the product as a step or a foothold.

NOTICE

Suitability of the product!

- ▶ The product must be appropriate for the piping system operating conditions (medium, medium concentration, temperature and pressure) and the prevailing ambient conditions.

NOTICE

Tools!

- ▶ The tools required for installation and assembly are not included in the scope of delivery.
- ● Use appropriate, functional and safe tools.

1. Ensure the product is suitable for the relevant application.
2. Check the technical data of the product and the materials.
3. Keep appropriate tools ready.
4. Wear appropriate protective gear, as specified in the plant operator's guidelines.
5. Observe appropriate regulations for connections.
6. Have installation work carried out by trained personnel.
7. Shut off plant or plant component.
8. Secure plant or plant component against recommissioning.
9. Depressurize the plant or plant component.
10. Completely drain the plant (or plant component) and let it cool down until the temperature is below the media vaporization temperature and cannot cause scalding.
11. Correctly decontaminate, rinse and ventilate the plant or plant component.
12. Lay piping so that the product is protected against transverse and bending forces, and also from vibrations and tension.
13. Only install the product between matching aligned pipes (see chapters below).
14. Please note the flow direction (see chapter "Flow direction").
15. Please note the installation position (see chapter "Installation position").

10.3 Installation with clamp connections

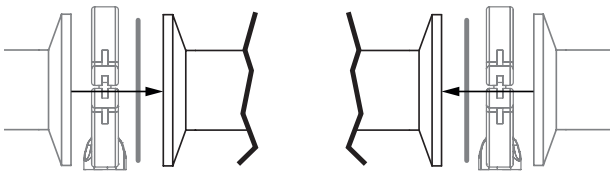

Fig. 7: Clamp connection

NOTICE

Gasket and clamp!

- ▶ The gasket and clamps for clamp connections are not included in the scope of delivery.

1. Keep ready gasket and clamp.
2. Carry out preparation for installation (see chapter "Preparing for installation").
3. Insert the corresponding gasket between the body of the product and the pipe connection.
4. Connect the gasket between the body of the product and the pipe connection using clamps.
5. Re-attach or reactivate all safety and protective devices.

10.4 Installation with butt weld spigots

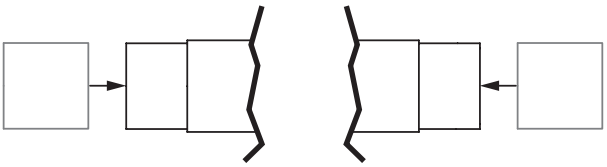

Fig. 8: Butt weld spigots

1. Carry out preparation for installation (see chapter "Preparing for installation").
2. Remove the actuator before welding the valve into the plant (see chapter "Removing the actuator").
3. Adhere to good welding practices!
4. Weld the body of the product in the piping.
5. Allow butt weld spigots to cool down.
6. Mount the actuator on the valve body (see chapter "Mounting the actuator").
7. Re-attach or reactivate all safety and protective devices.
8. Flush the system.

11 Mounting

Mounting the actuator on the distance piece:

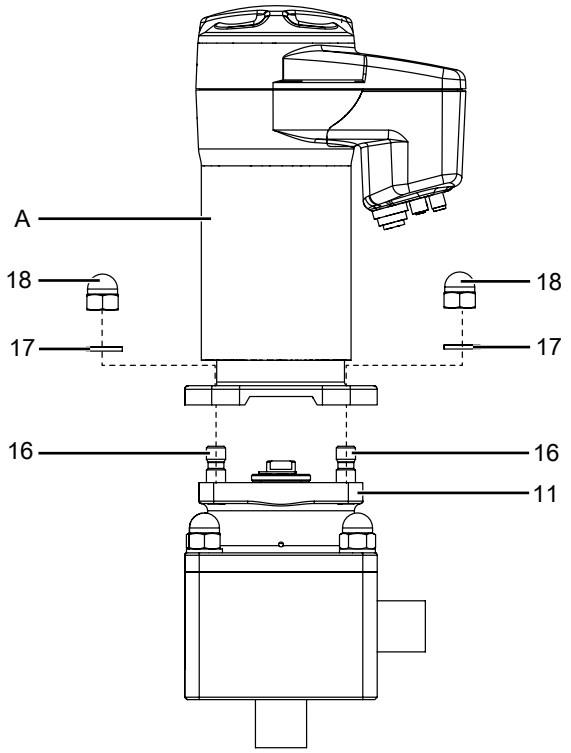

1. Move actuator **A** to the open position.
2. Place actuator **A** on distance piece **11**.
3. Place washers **17** and cap nuts **18** on stud bolts **16** and position by hand.
4. Tighten the cap nuts **18** diagonally.

Actuator size	Tightening torque
2	16-20 Nm
3	30-35 Nm
4	40 Nm
5	70 Nm

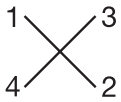

Mounting the actuator and the distance piece:

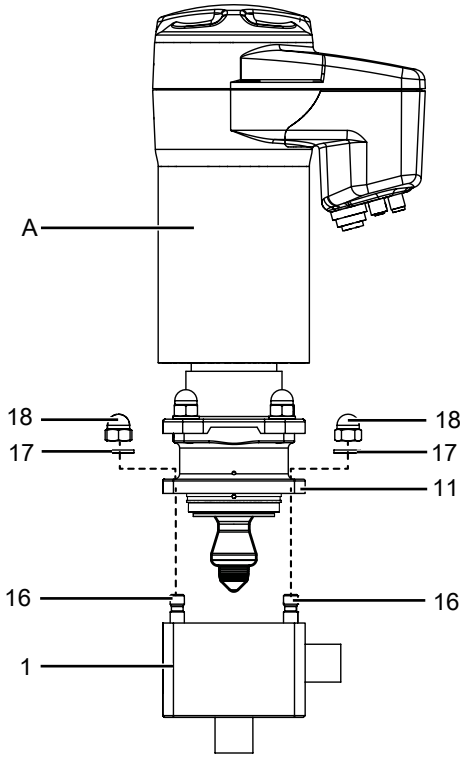

✓ **Actuator size 4/5:** Actuator **A** in open position.

5. Place actuator **A** and distance piece **11** on valve body **1**.
6. Place washers **17** and cap nuts **18** on stud bolts **16** and position by hand.
7. Tighten the cap nuts **18** diagonally.

Actuator size	Tightening torque
2	16-20 Nm
3	30-35 Nm
4	40 Nm
5	70 Nm

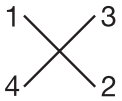

11.1 Mounting for option with a bypass valve

11.1.1 Mounting the diaphragm

NOTICE

▶ **Important:** Mount the correct diaphragm that suits the valve (suitable for medium, medium concentration, temperature and pressure). The diaphragm is a wearing part. Check the technical condition and function of the diaphragm valve before commissioning and during the whole term of use. Carry out checks regularly and determine the check intervals in accordance with the conditions of use and/or the regulatory codes and provisions applicable for this application.

NOTICE

▶ **Important:** Incorrectly mounted diaphragm may cause valve leakage / emission of medium. In this case remove the diaphragm, check the complete valve and diaphragm and reassemble again proceeding as described above.

Diaphragm size 8:

Compressor and actuator flange seen from below:

Push-fit diaphragm:

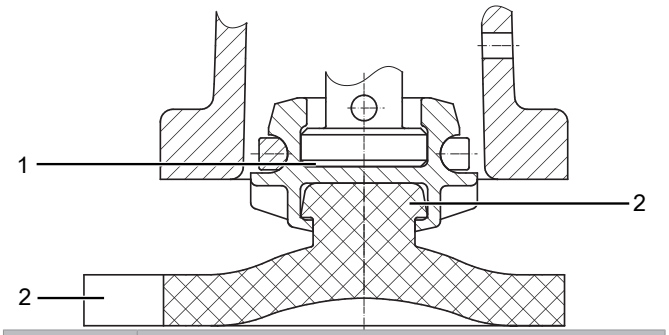

Item	Name
1	Recess of compressor
2	Diaphragm tab
3	Fastening spigot

1. Move the actuator to the closed position.
2. Place the diaphragm with the fastening spigot in an inclined position at the recess of the compressor and push it in.

NOTICE

▶ **Important:** Do not use greases or lubricants!

3. Align diaphragm tab with identifying manufacturer and material in parallel to compressor weir.

11.1.2 Mounting the actuator

1. Move the actuator to the open position.
2. Position the actuator with the mounted diaphragm on the valve body.
   ⇨ Take care to align the compressor weir and valve body weir (diaphragm size 8).
3. Tighten the fastening elements by hand.
4. Move the actuator to the closed position.
5. Fully tighten the bolts with nuts diagonally

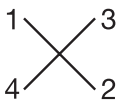

6. Ensure that the diaphragm is compressed evenly (approx. 10-15 %, visible by an even bulge to the outside).
7. Check tightness of completely assembled valve.

NOTICE

▶ **Important:** Diaphragms set in the course of time. After valve disassembly / assembly check that the bolts and nuts on the body are tight and retighten if necessary (at the very latest after the first sterilisation process).

12 Electrical connection

⚠ CAUTION

Danger – high voltage!

▶ Electric shock.

- Before performing any work on the GEMÜ product, switch off power supply and protect circuit from being switched on again.
- Electrical connection to be performed by qualified and trained personnel only.

12.1 Electrical connection - eSyDrive

NOTICE

Appropriate cable socket/appropriate mating connector!

▶ The appropriate cable socket and/or appropriate mating connector is included for X1, X3 and X4.

▶ The appropriate cable socket and/or appropriate mating connector is **not** included for X2.

NOTICE

Damage to unused connectors due to penetration of humidity!

▶ Unused plugs must be covered with the protective caps supplied with the product to ensure IP protection.

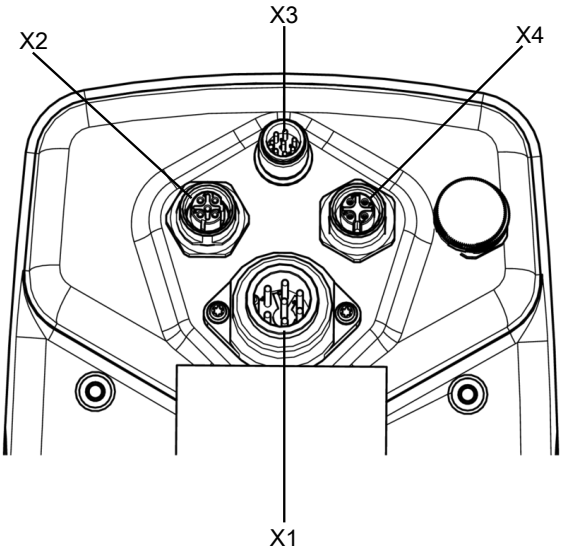

Fig. 9: Overview of electrical connections

12.1.1 Connection X1

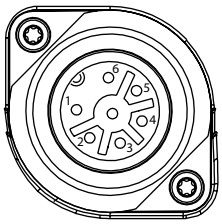

7-pin plug, Binder, type 693

Pin	Signal name
Pin 1	Uv, 24 V DC supply voltage
Pin 2	Uv GND
Pin 3	Relay output K1, common
Pin 4	Relay output K1, make contact
Pin 5	Relay output K2, common
Pin 6	Relay output K2, make contact
Pin PE	Function earth

12.1.2 Connection X2

5-pin M12 built-in socket, D-coded

Pin	Signal name
Pin 1	Tx + (Ethernet)
Pin 2	Rx + (Ethernet)
Pin 3	Tx - (Ethernet)
Pin 4	Rx - (Ethernet)
Pin 5	Shield

12.1.3 Connection X3

8-pin M12 plug, A-coded

Pin	Signal name
Pin 1	W+ set value input
Pin 2	W – set value input
Pin 3	X + actual value output
Pin 4	GND (actual value output, digital input 1 – 3, error message output)
Pin 5	Error message output 24 V DC
Pin 6	Digital input 3
Pin 7	Digital input 1
Pin 8	Digital input 2

12.1.4 Connection X4

4-pin M12 built-in socket, A-coded

Pin	Signal name
Pin 1	UV, 24 V DC actual value supply
Pin 2	n.c.
Pin 3	GND (actual value supply, actual value input)
Pin 4	X+, process actual value input
Pin 5	n.c.

12.1.5 Connecting the product electrically

1. Protect the electrical connections from direct contact with rain water.
2. Lay the cables and pipework so that neither condensate nor rain water can get into the plug unions.
3. Check that all plug cable glands and fittings are mechanically secured.
   ⇨ The cable must be held firmly on all sides.
4. Check whether the actuator cover/manual override is closed and undamaged.
5. Correctly close the actuator cover/manual override again immediately after use (see “Manual override“, page 50).
6. Correctly close the product again after replacing the diaphragm.

12.1.6 Connection diagram

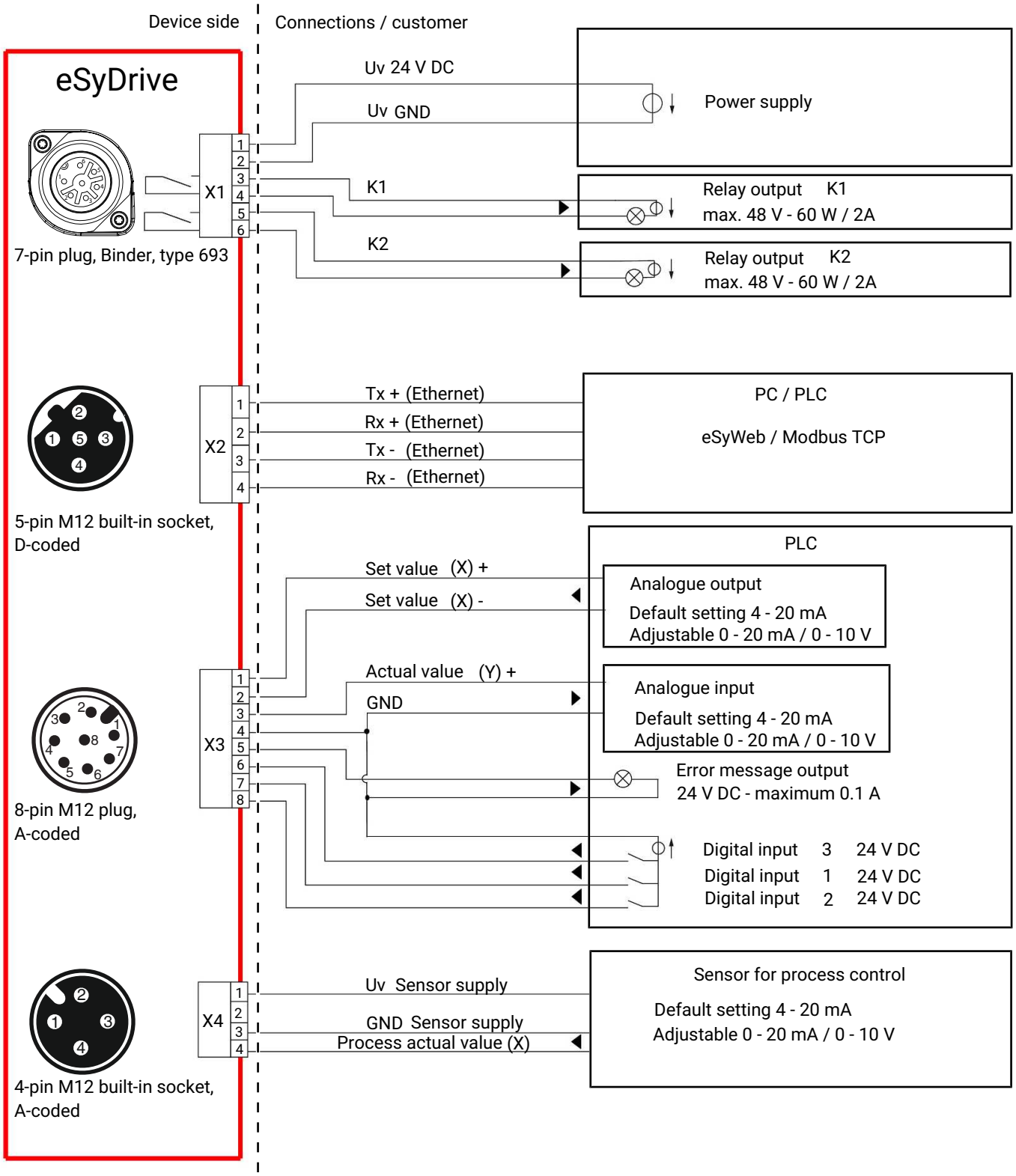

13 Commissioning

⚠ DANGER

Danger from pressure surges or excessive pressure!

- ▶ Serious injury or death due to penetration of pressurized media
- ● Ensure that the valve can be dismantled for maintenance purposes.

⚠ CAUTION

Maximum permissible pressure exceeded!

- ▶ Damage to the product!
- ● Provide for precautionary measures against exceeding the maximum permissible pressure that may be caused by pressure surges (water hammer).

⚠ CAUTION

Corrosion from media that attack the valve body, seals or diaphragm

- ▶ Damage to the product.
- ● Prior to commissioning, the operator must carry out a material compatibility test.
- ● Only operate the product with suitable media.

13.1 Commissioning on the device

1. Ensure that the "ON-Site" DIP switch 8 is not in the "ON" position (see “Buttons for on-site control“, page 6).
2. Press and hold down the "INIT/CLOSE" button **10** for at least 8 s.
   ⇨ Initialization of the actuator begins.
3. Green and orange LEDs flash alternately.
   ⇨ Initialization is completed.

⇨ Commissioning is completed.

13.2 Commissioning via the eSy-Web web interface

- ● See separate eSy-Web operating instructions.

13.3 Commissioning via digital input

✓ The function of input 3 is set to init.

1. Apply 24 V DC signal briefly (max. 2 s) to connection X3 pin 6 (reference GND connection X3 pin 4).
   ⇨ Initialization of the actuator begins.
2. Green and orange LEDs flash alternately.
   ⇨ Initialization is completed.

⇨ Commissioning is completed.

14 Operation

⚠ CAUTION

Risk of crushing!

- ▶ Risk of severe injury. The guide piece is accessible when the housing cover is removed, posing a risk of crushing by the guide piece when the actuator moves.
- ● Operation, maintenance, inspection and assembly must only be performed by qualified and trained personnel.

⚠ CAUTION

Risk of crushing!

- ▶ Risk of severe injury. Contact with the threaded spindle is possible on the base of the actuator, posing a risk of crushing by the threaded spindle when the actuator moves.
- ● Operation, maintenance, inspection and assembly must only be performed by qualified and trained personnel.

14.1 Manual override

⚠ WARNING

Rotating cover!

- ▶ Risk of crushing
- ● Disconnect the power supply before using the manual override.

1. Disconnect the power supply.
2. Turn housing cover **3** clockwise.
3. Remove housing cover **3**.

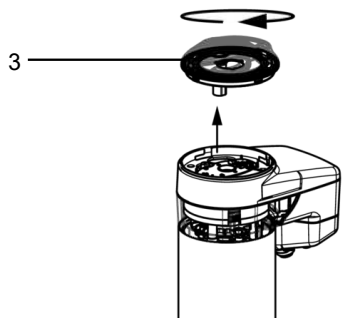

4. Place the actuator of housing cover **12** in the starting point for manual override.

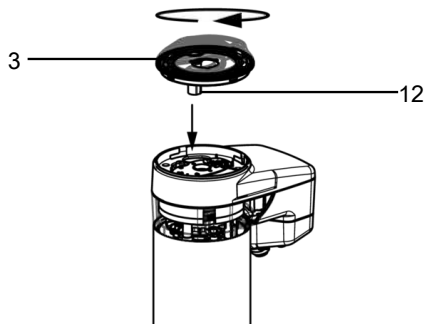

Item	Name
3	Housing cover
12	Housing cover actuator

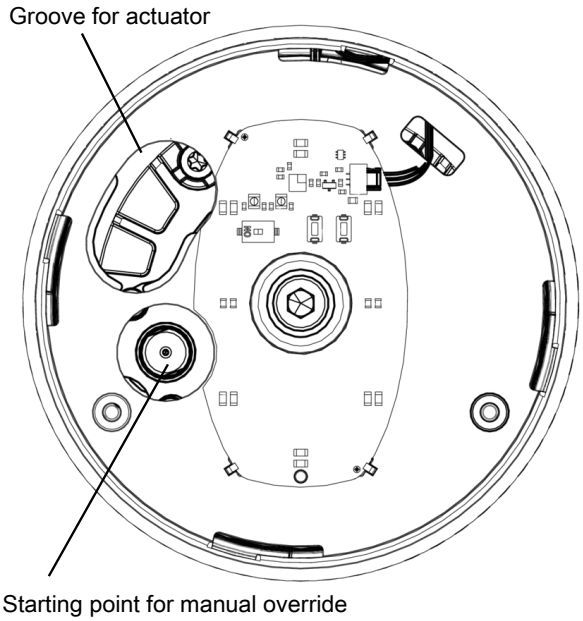

5. Turn housing cover **3** anticlockwise.
⇨ The product opens.
6. Turn housing cover **3** clockwise.
⇨ The product closes.
7. Pull manual override off the starting point.
8. Ensure correct positioning of the O-ring.
9. Push actuator **12** into the groove provided for this purpose.
10. Turn housing cover **3** anticlockwise until it stops.
⇨ Housing cover is closed.
11. Reconnect the power supply.

15 Operation

⚠ CAUTION

Hot surfaces!
- ▶ Burns from a hot medium or hot product surface.
- ● Only work on a plant that has cooled down or with appropriate protective gear.

⚠ CAUTION

Maximum permissible pressure exceeded!
- ▶ Damage to the product!
- ● Provide for precautionary measures against exceeding the maximum permissible pressure that may be caused by pressure surges (water hammer).

⚠ CAUTION

Noise emissions caused by high flow velocities (cavitation)
- ▶ Hearing damage
- ● Wear hearing protection

The product is motorized.

- ● Observe the enclosed operator instructions for the actuator.

16 Error messages

16.1 LED error messages

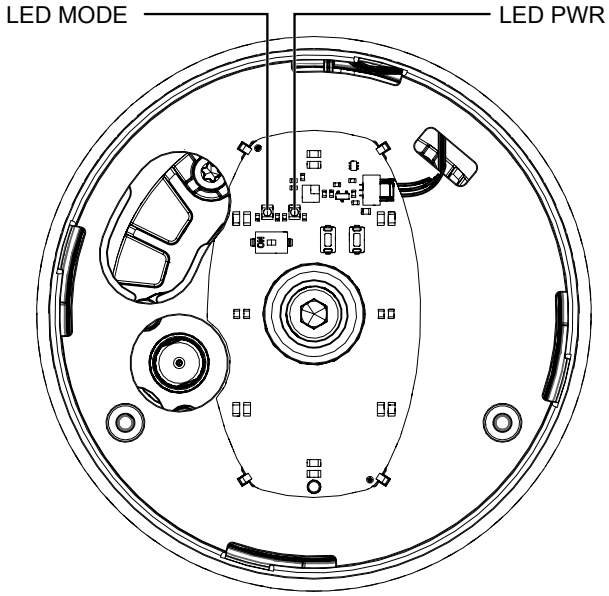

Fig. 10: Position of the status LEDs

The user checks the following conditions directly on-site at the valve using LED MODE and LED PWR:

Function	High visibility LED	
	green	orange
Error / Error display		

Function	LED MODE		LED PWR	
	yellow	blue	green	red
Undervoltage (no error display of the high visibility LED)				
Internal error	alternating			alternating
Calibration faulty	simultaneously			simultaneously
Initialization failure				
Temperature error (overtemperature)				
Set value error (< 4 mA, > 20 mA)				
Actual value error (< 4 mA, > 20 mA)				

16.2 Troubleshooting

Error	Error cause	Troubleshooting
Working medium escaping from leak detection hole	Plug diaphragm faulty	Check plug diaphragm for potential damage, replace plug diaphragm if necessary
The product does not open or does not open fully	Actuator faulty	Replace actuator cartridge, replace actuator if necessary
	Plug diaphragm incorrectly mounted	Remove actuator, check plug diaphragm mounting, replace plug diaphragm if necessary
The product is leaking downstream (does not close or does not close fully)	Operating pressure too high	Operate the product with operating pressure specified in datasheet
	Plug diaphragm incorrectly mounted	Remove actuator, check plug diaphragm mounting, correct if necessary
	Foreign matter between plug diaphragm and valve seat	Remove actuator, remove foreign matter, check plug diaphragm and valve body for damage and replace if necessary
	Valve body leaking or damaged	Carry out initialisation, check valve body for damage, replace valve body if necessary.
	Plug diaphragm faulty	Check plug diaphragm for potential damage, replace plug diaphragm if necessary
The product is leaking between actuator and valve body	Plug diaphragm incorrectly mounted	Remove actuator, check plug diaphragm mounting, correct if necessary
	Bolting between valve body and actuator loose	Tighten bolting between valve body and actuator
	Plug diaphragm faulty	Check plug diaphragm for potential damage, replace plug diaphragm if necessary
	Actuator/valve body damaged	Replace actuator/valve body
Connection between valve body and piping leaking	Incorrect installation	Check installation of valve body in piping
	Sealing material faulty	Replace sealing material
Valve body leaking	Valve body leaking or corroded	Check valve body for damage, replace valve body if necessary
Valve does not open/close or does not open/close fully	Voltage is not connected	Connect voltage
	Cable ends incorrectly wired	Wire cable ends correctly

17 Inspection and maintenance

⚠ DANGER

Danger from pressure surges or excessive pressure!
- ▶ Serious injury or death due to penetration of pressurized media
- ● Ensure that the valve can be dismantled for maintenance purposes.

⚠ CAUTION

Hot surfaces!
- ▶ Burns from a hot medium or hot product surface.
- ● Only work on a plant that has cooled down or with appropriate protective gear.

NOTICE

Exceptional maintenance work!
- ▶ Damage to the GEMÜ product
- ● Any maintenance work and repairs not described in these operating instructions must not be performed without consulting the manufacturer first.

The operator must carry out regular visual examination of the GEMÜ products dependent on the operating conditions and the potential danger in order to prevent leakage and damage.

The product also must be disassembled and checked for wear in the corresponding intervals.

1. Have servicing and maintenance work performed by trained personnel.
2. Wear appropriate protective gear as specified in plant operator's guidelines.
3. Shut off plant or plant component.
4. Secure the plant or plant component against recommissioning.
5. Depressurize the plant or plant component.
6. Actuate GEMÜ products which are always in the same position four times a year.

17.1 Replacing the actuator

17.1.1 Remove the actuator from the distance piece.

⚠ WARNING

The equipment is subject to pressure!
- ▶ Risk of severe injury or death
- ● Depressurize the plant or plant component.
- ● Completely drain the plant or plant component.

⚠ WARNING

Corrosive chemicals!
- ▶ Risk of caustic burns
- ● Wear appropriate protective gear.
- ● Completely drain the plant.

⚠ CAUTION

Danger - high voltage!
- ▶ Electric shock.
- ● Before performing any work on the GEMÜ product switch off power and protect circuit from being switched on again.

⚠ CAUTION

Hot surfaces!
- ▶ Burns from a hot medium or hot product surface.
- ● Only work on a plant that has cooled down or with appropriate protective gear.

⚠ CAUTION

Valve is no longer functioning correctly
- ▶ Damaged parts are reused.
- ● Remove and clean all parts, check for damage and replace if necessary.

NOTICE

Use of incorrect spare parts!
- ▶ Damage to the GEMÜ product
- ▶ The manufacturer liability and guarantee will be void.
- ● Use only genuine parts from GEMÜ.

NOTICE

Important:
- ▶ After disassembly, clean all parts of contamination. Take care not to damage the parts in the process. Afterwards, check parts for potential damage. If parts are damaged, replace them.

⚠ CAUTION

Valve is no longer functioning correctly
- ▶ Damaged parts are reused.
- ● Remove and clean all parts, check for damage and replace if necessary.

NOTICE

- ▶ The piping need not be drained when replacing the actuator, as the valve spindle is sealed by the plug diaphragm.

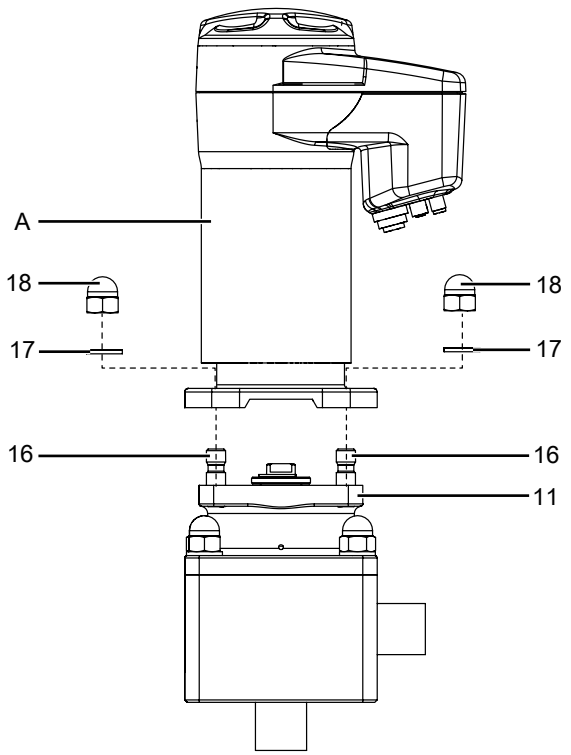

1. Move the actuator **A** to the open position.
2. Undo the cap nuts **18** from the stud bolts **16**.
3. Remove the washers **17**.
4. Remove the actuator **A** from the distance piece **11**.

17.1.2 Mounting the actuator on the distance piece

1. Move actuator **A** to the open position.
2. Place actuator **A** on distance piece **11**.
3. Place washers **17** and cap nuts **18** on stud bolts **16** and position by hand.
4. Tighten the cap nuts **18** diagonally.

Actuator size	Tightening torque
2	16-20 Nm
3	30-35 Nm
4	40 Nm
5	70 Nm

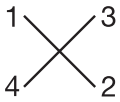

17.1.3 Removing the actuator with the distance piece

⚠ WARNING

The equipment is subject to pressure!
- ▶ Risk of severe injury or death
- ● Depressurize the plant or plant component.
- ● Completely drain the plant or plant component.

⚠ WARNING

Corrosive chemicals!
- ▶ Risk of caustic burns
- ● Wear appropriate protective gear.
- ● Completely drain the plant.

⚠ CAUTION

Danger - high voltage!
- ▶ Electric shock.
- ● Before performing any work on the GEMÜ product switch off power and protect circuit from being switched on again.

⚠ CAUTION

Hot plant components!
- ▶ Burns
- ● Only work on plant that has cooled down.
- ● Wear protective gear.

NOTICE

Use of incorrect spare parts!
- ▶ Damage to the GEMÜ product
- ▶ The manufacturer liability and guarantee will be void.
- ● Use only genuine parts from GEMÜ.

⚠ CAUTION

Valve is no longer functioning correctly

- ▶ Damaged parts are reused.
- ● Remove and clean all parts, check for damage and replace if necessary.

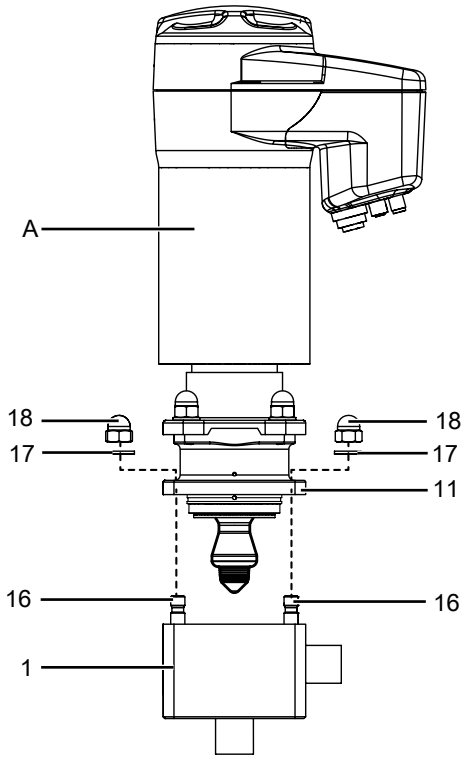

1. Undo the cap nuts **18** from the stud bolts **16**.
2. Remove the washers **17**.
3. Remove the actuator **A**, including the distance piece **11**, from the valve body **1**.
   ⇨ Do not damage the sealing surface!

17.1.4 Mounting the actuator with the distance piece

✓ **Actuator size 4/5:** Actuator **A** in open position.

1. Place actuator **A** and distance piece **11** on valve body **1**.
2. Place washers **17** and cap nuts **18** on stud bolts **16** and position by hand.
3. Tighten the cap nuts **18** diagonally.

Actuator size	Tightening torque
2	16-20 Nm
3	30-35 Nm
4	40 Nm
5	70 Nm

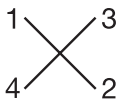

17.2 Replacing the regulating cone

17.2.1 Removing the regulating cone

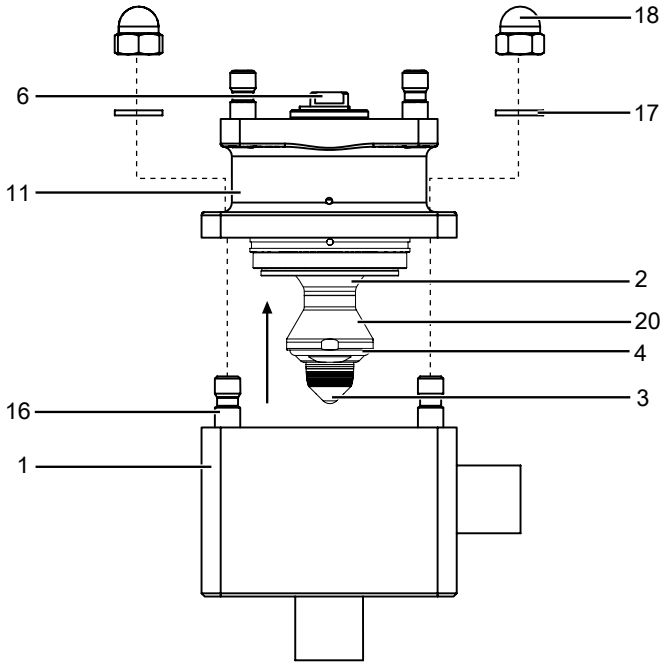

1. Remove the actuator (see chapter "Removing the actuator from the distance piece").
2. Undo the cap nuts **18** from the stud bolts **16**.
3. Remove the washers **17**.
4. Remove the valve body **1** from the distance piece **11**.
   ⇨ Do not damage the sealing surfaces!

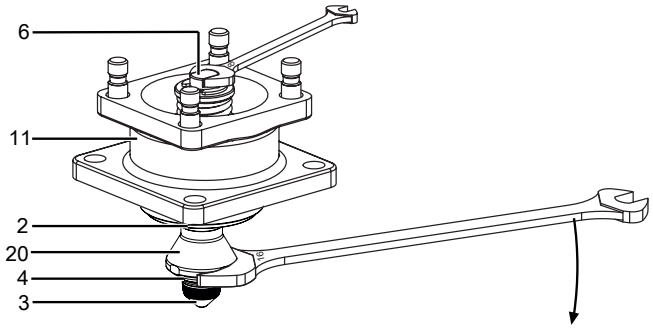

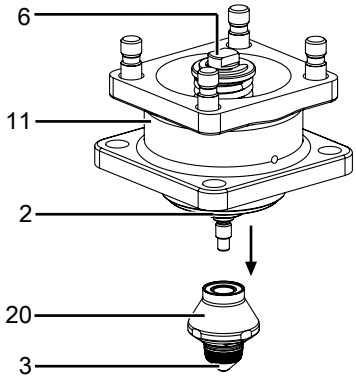

5. Position a **WAF 8** open-end wrench on the wrench surface of the valve spindle **6** (do not damage the spindle surfaces in the process).
6. Simultaneously, position a **WAF 16** open-end wrench on the support ring **20**. By counterholding both open-end wrenches, carefully release the support ring **20** with the regulating cone **3** from the valve spindle **6**.

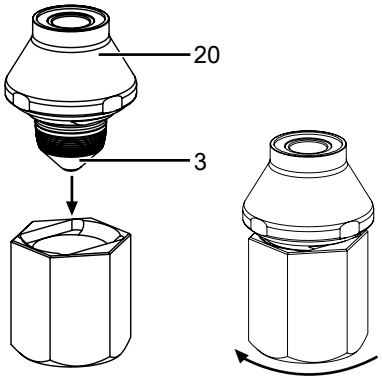

7. Hold the support ring **20** in place and release the regulating cone **3** using the assembly tool. Do not damage the regulating cone surface in the process.

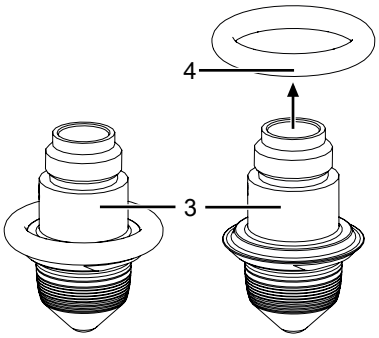

8. Remove the O-ring **4** from the regulating cone **3**.
9. Carefully remove the solvent cement from the thread on the regulating cone **3** (e.g. using a stainless steel brush).
   ⇨ Do not damage the regulating cone surface in the process.

17.2.2 Mounting the regulating cone

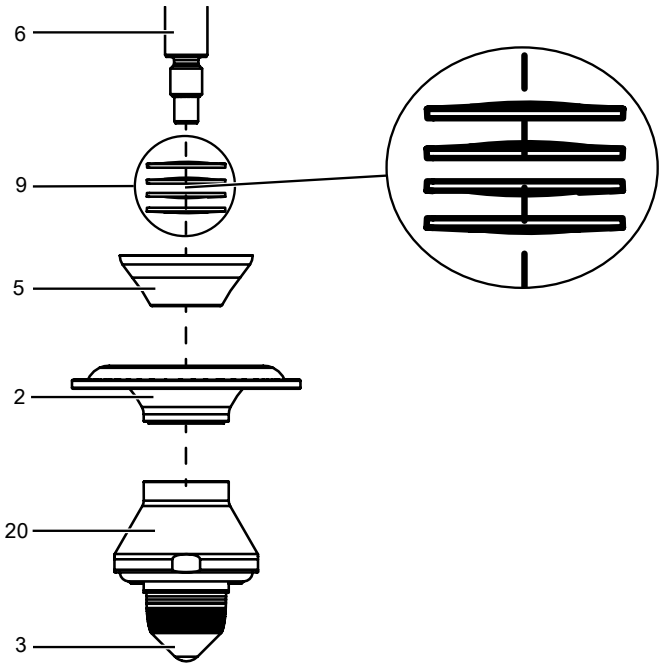

If when removing the regulating cone **3** the plug diaphragm **2**, the adjustable insert **5** and the spring washers **9** are loosened, these must be placed back in the correct position before mounting the regulating cone **3**!

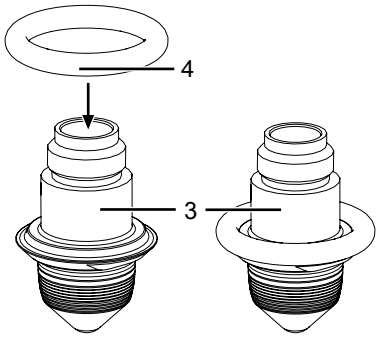

1. Mount the O-ring **4** on the regulating cone **3**.

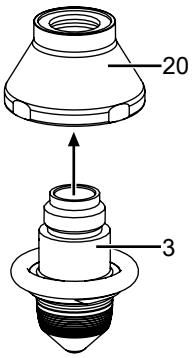

2. Wet the thread of the regulating cone **3** with suitable thread locking compound (e.g. WEICONLOCK AN 301-65).
3. Screw the regulating cone **3** into the support ring **20** until it is hand tight.

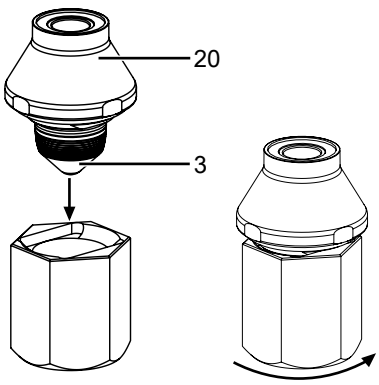

4. Hold the support ring **20** in place and secure the regulating cone **3** using the assembly tool and hand-tighten it.
   ⇨ Do not damage the regulating cone surface in the process.

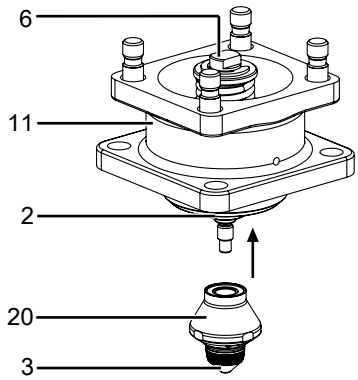

5. Screw the support ring **20** to the valve spindle **6** and hand-tighten it.
   ⇨ Where necessary, wet the thread of the valve spindle **6** with suitable thread locking compound (e.g. WEICON-LOCK AN 301-65).

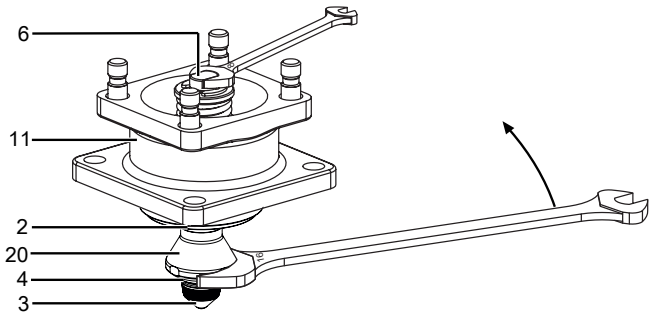

6. Position a **WAF 16** open-end wrench on the regulating cone **3**. Simultaneously, position a **WAF 8** open-end wrench on the wrench surface of the valve spindle **6**. By counterholding both open-end wrenches, carefully bolt the support ring **20** with the regulating cone **3** to the valve spindle **6** (tightening torque: 7-9 Nm).
7. Place the distance piece **11** onto the valve body **1**.
8. Place washers **17** and cap nuts **18** on stud bolts **16** and position by hand.
9. Tighten the cap nuts **18** diagonally.

Actuator size	Tightening torque
2	16-20 Nm
3	30-35 Nm
4	40 Nm
5	70 Nm

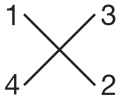

17.3 Replacing the plug diaphragm (code 4)

17.3.1 Removing the plug diaphragm

NOTICE

Use of incorrect spare parts!
- ▶ Damage to the GEMÜ product
- ▶ The manufacturer liability and guarantee will be void.
- ● Use only genuine parts from GEMÜ.

1. Remove the support ring **20** and the regulating cone **3** (see chapter "Removing the regulating cone").

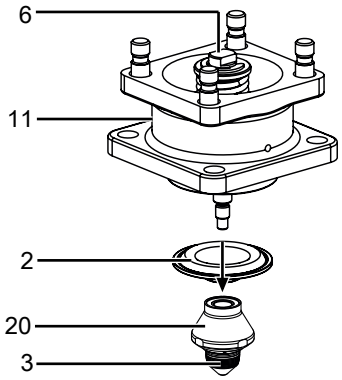

2. Remove the plug diaphragm **2** from the valve spindle **6**.
3. Clean all parts and check them for potential damage.
   ⇨ Do not scratch or damage parts during cleaning!
4. Replace damaged parts (only use genuine parts from GEMÜ).

17.3.2 Mounting the plug diaphragm

1. Position plug diaphragm **2** at distance piece **11** via valve spindle **6**

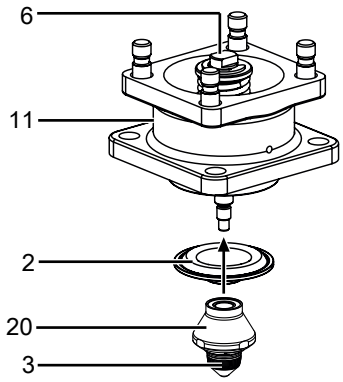

   ⇨ Where necessary, wet the thread of the valve spindle **6** with suitable thread locking compound (e.g. WEICON-LOCK AN 301-65).
2. Mount the support ring **20** and the regulating cone **3** (see chapter "Mounting the regulating cone").

17.4 Replacing the plug diaphragm (code 5)

17.4.1 Removing the plug diaphragm

NOTICE

Use of incorrect spare parts!

- ▶ Damage to the GEMÜ product
- ▶ The manufacturer liability and guarantee will be void.
- ● Use only genuine parts from GEMÜ.

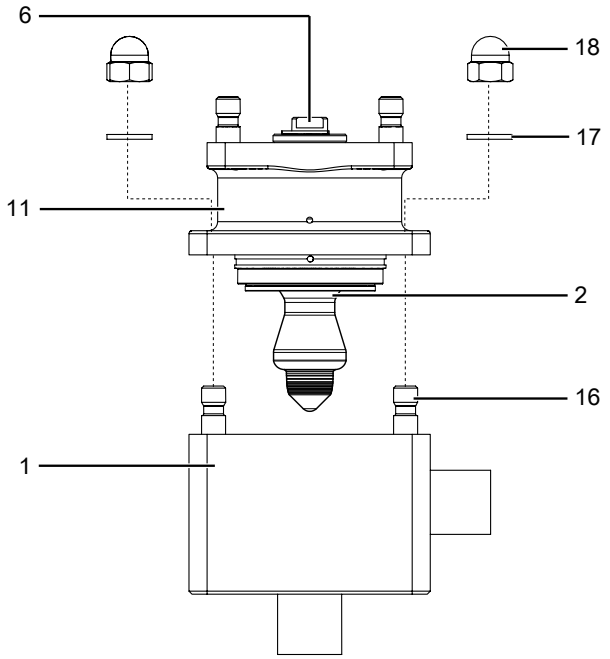

1. Remove the actuator (see chapter "Removing the actuator from the distance piece").
2. Undo the cap nuts **18** from the stud bolts **16**.
3. Remove the washers **17**.
4. Remove the valve body **1** from the distance piece **11**.
   ⇨ Do not damage the sealing surfaces!

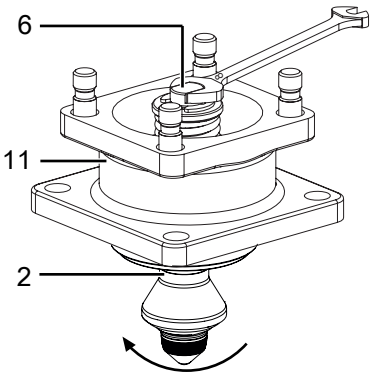

5. Position a **WAF 8** open-end wrench on the wrench surface of the valve spindle **6** (do not damage the spindle surfaces in the process).
6. Undo the plug diaphragm **2**.

17.4.2 Mounting the plug diaphragm

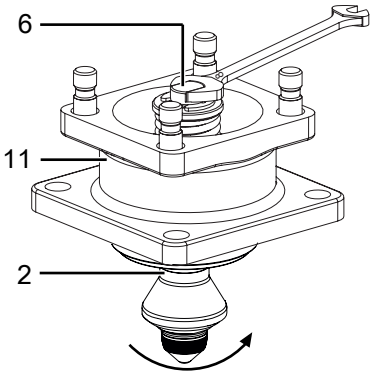

✓ **Actuator size 4/5:** Press valve spindle **6** downwards to screw in the plug diaphragm **2** completely.

1. Screw the plug diaphragm **2** to the valve spindle **6** and hand-tighten it.
2. Place the distance piece **11** onto the valve body **1**.
3. Place washers **17** and cap nuts **18** on stud bolts **16** and position by hand.
4. Tighten the cap nuts **18** diagonally.

Actuator size	Tightening torque
2	16-20 Nm
3	30-35 Nm
4	40 Nm
5	70 Nm

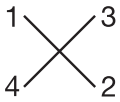

17.5 Replacing the bypass valve actuator

17.5.1 Removing the actuator

1. Move the actuator to the open position.
2. Loosen fastening elements between the valve body and the actuator diagonally and remove them.

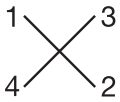

3. Remove the actuator from the valve body.
4. Move the actuator to the closed position.

NOTICE

Important:

- ▶ After disassembly, clean all parts of contamination. Take care not to damage the parts in the process. Afterwards, check parts for potential damage. If parts are damaged, replace them.

17.5.2 Removing the diaphragm

NOTICE

- ▶ Before removing the diaphragm, remove the actuator, see previous chapter "Removing the actuator").

1. Pull out the diaphragm (diaphragm size 8).

NOTICE

Important:

▶ After disassembly, clean all parts of contamination. Take care not to damage the parts in the process. Afterwards, check parts for potential damage. If parts are damaged, replace them.

2. Use only genuine parts from GEMÜ.

17.5.3 Mounting the diaphragm

NOTICE

▶ **Important:** Mount the correct diaphragm that suits the valve (suitable for medium, medium concentration, temperature and pressure). The diaphragm is a wearing part. Check the technical condition and function of the diaphragm valve before commissioning and during the whole term of use. Carry out checks regularly and determine the check intervals in accordance with the conditions of use and/or the regulatory codes and provisions applicable for this application.

NOTICE

▶ **Important:** Incorrectly mounted diaphragm may cause valve leakage / emission of medium. In this case remove the diaphragm, check the complete valve and diaphragm and reassemble again proceeding as described above.

Diaphragm size 8:

Compressor and actuator flange seen from below:

Push-fit diaphragm:

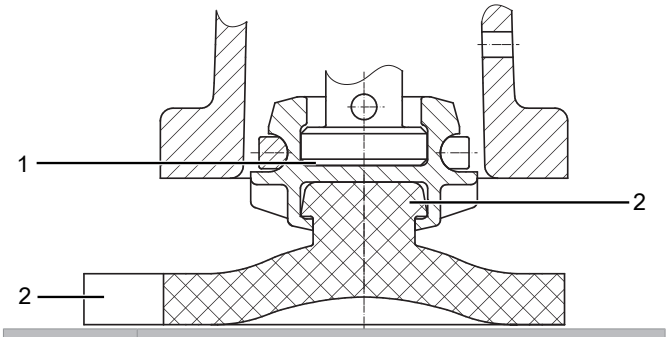

Item	Name
1	Recess of compressor
2	Diaphragm tab
3	Fastening spigot

1. Move the actuator to the closed position.
2. Place the diaphragm with the fastening spigot in an inclined position at the recess of the compressor and push it in.

NOTICE

▶ **Important:** Do not use greases or lubricants!

3. Align diaphragm tab with identifying manufacturer and material in parallel to compressor weir.

17.5.4 Mounting the actuator

1. Move the actuator to the open position.
2. Position the actuator with the mounted diaphragm on the valve body.
   ⇨ Take care to align the compressor weir and valve body weir (diaphragm size 8).
3. Tighten the fastening elements by hand.
4. Move the actuator to the closed position.
5. Fully tighten the bolts with nuts diagonally

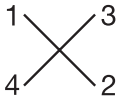

6. Ensure that the diaphragm is compressed evenly (approx. 10-15 %, visible by an even bulge to the outside).
7. Check tightness of completely assembled valve.

NOTICE

▶ **Important:** Diaphragms set in the course of time. After valve disassembly / assembly check that the bolts and nuts on the body are tight and retighten if necessary (at the very latest after the first sterilisation process).

17.6 Cleaning the product

- Clean the product with a damp cloth.
- Do **not** clean the product with a high pressure cleaning device.

17.7 Spare parts

17.7.1 Seal material code 4, 43, 45. 47

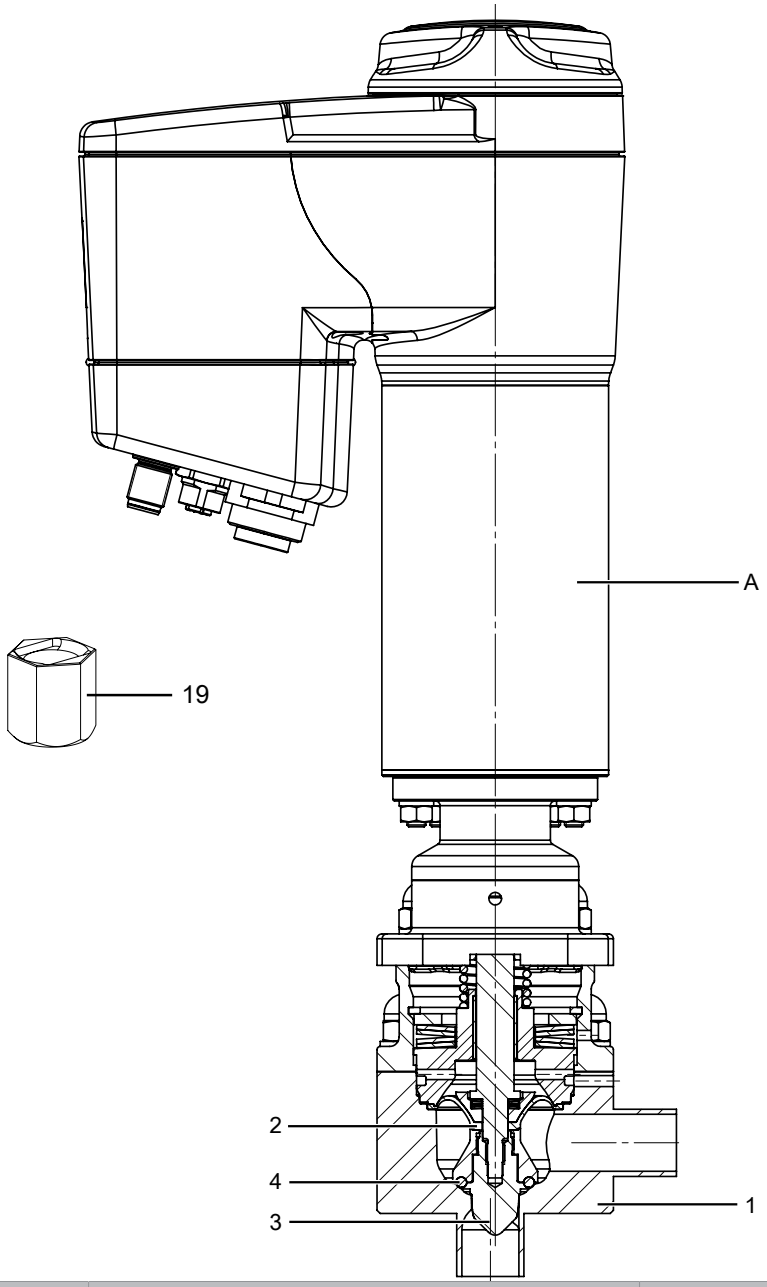

Item	Name	Order description
A	Actuator	9567
1	Valve body	K567
2	Plug diaphragm	567 SVS…
4	O-ring	
2	Plug diaphragm	567 SVM...
4	O-ring	
19	Assembly tool	
2	Plug diaphragm	567 SRK 4...
3	Regulating cone	
4	O-ring	
19	Assembly tool	
	Set of screws (88491207)	567 S30E 41 2

17.7.2 Seal material code 5, 55

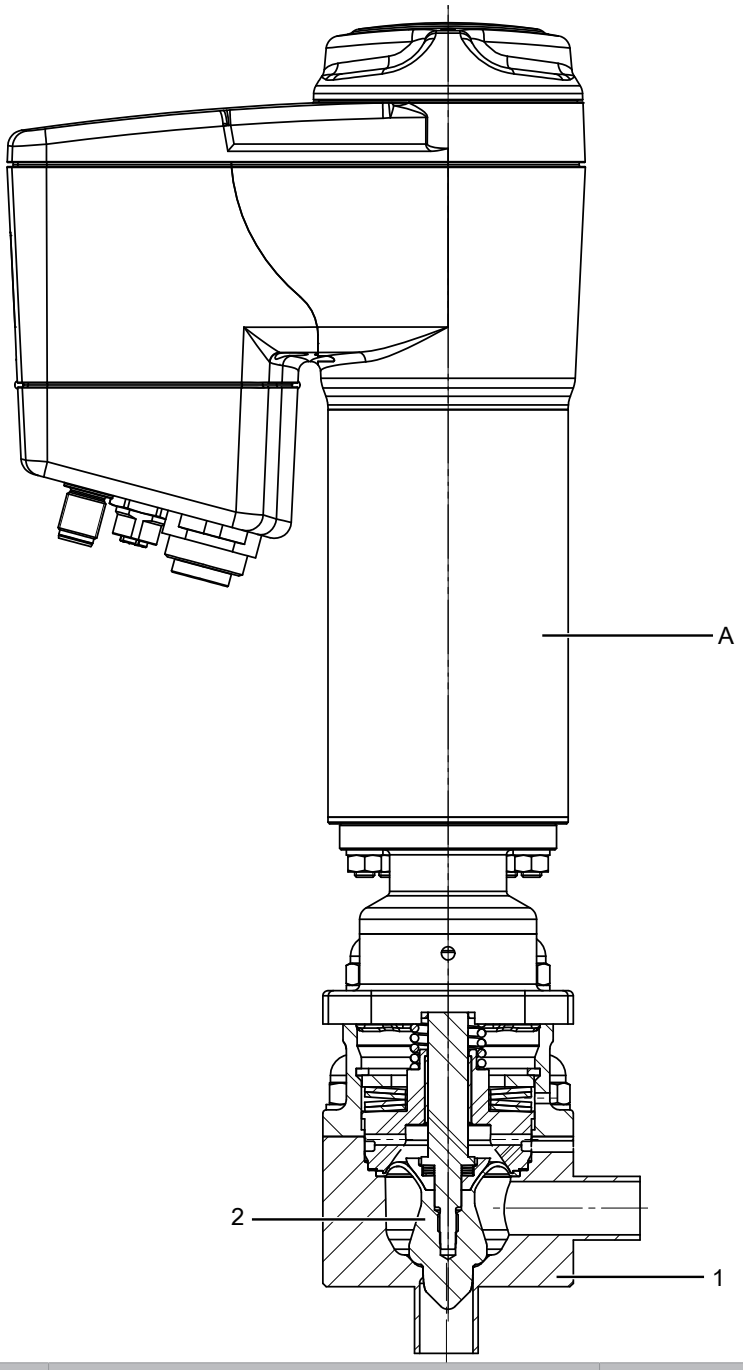

Item	Name	Order description
A	Actuator	9567
1	Valve body	K567
2	Plug diaphragm with regulating cone	567 SRK 5…
	Set of screws (88491207)	567 S30E 41 2

18 Removal from piping

1. Remove the clamp or screw connections in reverse order to installation.
2. Remove welded or solvent cemented connections using a suitable cutting tool.
3. Observe the safety information and accident prevention regulations.

19 Disposal

1. Pay attention to adhered residual material and gas diffusion from penetrated media.
2. Dispose of all parts in accordance with the disposal regulations/environmental protection laws.

20 Returns

Legal regulations for the protection of the environment and personnel require that the completed and signed return delivery note is included with the dispatch documents. Returned goods can be processed only when this note is completed. If no return delivery note is included with the product, GEMÜ cannot process credits or repair work but will dispose of the goods at the operator's expense.

1. Clean the product.
2. Request a return delivery note from GEMÜ.
3. Complete the return delivery note.
4. Send the product with a completed return delivery note to GEMÜ.

21 EU Declaration of Incorporation

Version 1.0

Original EU-Einbauerklärung

EU Declaration of Incorporation

Wir, die Firma

We, the company

GEMÜ Gebr. Müller Apparatebau GmbH & Co. KG
Gert-Müller-Platz 1
74635 Kupferzell
Deutschland

erklären hiermit in alleiniger Verantwortung, dass die nachfolgend bezeichneten Produkte den Vorschriften der genannten Richtlinien entspricht.

hereby declare under our sole responsibility that the below-mentioned products complies with the regulations of the mentioned Directives.

Produkt: GEMÜ 567

Product: GEMÜ 567

Produktname: Aseptisches Regelventil

Product name: Aseptic control valve

Inbetriebnahme der unvollständigen Maschine ist nur zulässig, wenn die Gesamtmaschine den Anforderungen der Maschinenrichtlinie 2006/42/EG entspricht.

Commissioning of the incomplete machine is only permitted if the complete machine complies with the requirements of the Machinery Directive 2006/42/EC.

Richtlinien/Verordnungen:

Directives/Regulations:

MD 2006/42/EG[1)]

Folgende harmonisierte Normen (oder Teile hieraus) wurden angewandt:

The following harmonized standards (or parts thereof) have been applied:

EN ISO 12100:2010

Folgende grundlegenden Sicherheits- und Gesundheitsschutzanforderungen der EG-Maschinenrichtlinie 2006/42/EG, Anhang I wurden angewandt und eingehalten:

The following essential health and safety requirements of the EC Machinery Directive 2006/42/EC, Annex I have been applied or adhered to:

1.1.2.; 1.1.3.; 1.1.5.; 1.2.3.; 1.2.4.; 1.2.5.; 1.2.6.; 1.3.2.; 1.3.4.; 1.3.7.; 1.3.9.; 1.5.1.; 1.5.15.; 1.5.4.; 1.5.5.; 1.6.1.; 1.6.3.; 1.6.4.; 1.7.1.; 1.7.1.1.; 1.7.2.; 1.7.3.; 1.7.4.; 1.7.4.1.; 1.7.4.2.; 1.7.4.3.; 2.1.1.; 2.1.2.

[1)] MD 2006/42/EG
Bemerkungen:
Ferner wird erklärt, dass die speziellen technischen Unterlagen gemäß Anhang VII Teil B erstellt wurden.
Der Hersteller verpflichtet sich, einzelstaatlichen Stellen auf begründetes Verlangen die speziellen technischen Unterlagen zu der unvollständigen Maschine zu übermitteln. Diese Übermittlung erfolgt elektronisch.
Die gewerblichen Schutzrechte bleiben hiervon unberührt!

[1)] MD 2006/42/EG
Remarks:
It is also declared that the specific technical documentation has been prepared in accordance with Annex VII, Part B.
The manufacturer undertakes to provide national authorities with the specific technical documentation relating to the partly completed machinery upon reasoned request. This documentation shall be provided electronically.
Industrial property rights remain unaffected by this.!

i.V. M. Barghoorn
Leiter Globale Technik

Ingelfingen, 26.02.2026

GEMÜ Gebr. Müller Apparatebau GmbH & Co. KG
Gert-Müller-Platz 1, 74635 Kupferzell, Deutschland

www.gemu-group.com
info@gemue.de

22 EU Declaration of Conformity

CE Version 1.0 GEMÜ

EU-Konformitätserklärung

EU Declaration of Conformity

Wir, die Firma / We, the company

GEMÜ Gebr. Müller Apparatebau GmbH & Co. KG
Gert-Müller-Platz 1
74635 Kupferzell
Deutschland

erklären hiermit in alleiniger Verantwortung, dass die nachfolgend bezeichneten Produkte den Vorschriften der genannten Richtlinien entspricht.

hereby declare under our sole responsibility that the below-mentioned products complies with the regulations of the mentioned Directives.

Produkt: GEMÜ 567

Product: GEMÜ 567

Produktname: Aseptisches Regelventil

Product name: Aseptic control valve

Richtlinien/Verordnungen:

Directives/Regulations:

EMC 2014/30/EU; PED 2014/68/EU[1)]

Folgende harmonisierte Normen (oder Teile hieraus) wurden angewandt:

The following harmonized standards (or parts thereof) have been applied:

EN 13397:2001; EN 61000-6-2:2005/AC:2005; EN 61000-6-4:2007/A1:2011; EN 61326-1:2013; EN 61800-3:2004/A1:2012

Weitere angewandte Normen:

Further applied norms:

AD 2000

[1)] PED 2014/68/EU
Einteilung gemäß Druckgeräterichtlinie 2014/68/EU, Artikel 4 und Anhang II:
Fluidklasse 1 (gasförmig oder flüssig),
Diagramm 6, Kategorie I
Instabile Gase sind ausgeschlossen.
Notifizierte Stelle:
TÜV Rheinland Industrie Service GmbH
Am Grauen Stein 1
51105 Köln
Kennnummer der notifizierten Stelle: 0035
Nr. des QS-Zertifikats: 01 202 926/Q-02 0036
Angewandte(s) Konformitätsbewertungsverfahren: Modul H
Hinweis für Produkte mit einer Nennweite ≤ DN 25:
Die Produkte werden entwickelt und produziert nach GEMÜ eigenen Verfahrensanweisungen und Qualitätsstandards, welche die Forderungen der ISO 9001 und der ISO 14001 erfüllen. Die Produkte dürfen gemäß Artikel 4, Absatz 3 der Druckgeräterichtlinie 2014/68/EU keine CE-Kennzeichnung tragen.

[1)] PED 2014/68/EU
Classification in accordance with the Pressure Equipment Directive 2014/68/EU, Article 4 and Annex II:
Fluid class 1 (gaseous or liquid),
Diagram 6, Category I
Unstable gases are excluded.
Notified body:
TÜV Rheinland Industrie Service GmbH
Am Grauen Stein 1
51105 Cologne
Identification number of the notified body: 0035
QA certificate number: 01 202 926/Q-02 0036
Applied conformity assessment procedures: Module H
Note for products with a nominal size ≤ DN 25:
DThe products are developed and manufactured in accordance with GEMÜ's own process instructions and quality standards, which meet the requirements of ISO 9001 and ISO 14001. In accordance with Article 4, Paragraph 3 of the Pressure Equipment Directive 2014/68/EU, the products are not permitted to bear the CE mark.

i.V. M. Barghoorn
Leiter Globale Technik

Ingelfingen, 26.02.2026

GEMÜ Gebr. Müller Apparatebau GmbH & Co. KG
Gert-Müller-Platz 1, 74635 Kupferzell, Deutschland

www.gemu-group.com
info@gemue.de

GEMÜ Gebr. Müller Apparatebau GmbH & Co. KG
Gert-Müller-Platz 1, 74635 Kupferzell, Germany
Phone +49 (0) 7940 1230 · info@gemue.de
www.gemu-group.com

Subject to alteration

10.2026 | 88600422