GEMÜ 567 eSyDrive

Motorized control valve

Features

- Easy, fast, and error-optimized maintenance
- Actuator can be replaced under operating pressure without contaminating the medium
- Positioners and process controller with diagnostic functions
- Force and speed are variably adjustable
- Operable via web interface eSy-Web or Modbus TCP
- Hermetic separation between medium and actuator thanks to PD sealing technology
- Various functions of add-on components and accessories are already integrated (e.g. position indicators, stroke limiters, etc.)

Description

The GEMÜ 567 eSyDrive 2/2-way diaphragm globe valve is a precise motorized control valve for sterile applications. The GEMÜ eSyDrive hollow shaft actuator can be operated as an actuator with integrated positioner or process controller. Flow rates range from 80 l/h to 63 m³/h, depending on the version.

Technical specifications

- **Media temperature:** -10 to 160 °C
- **Ambient temperature:** -10 Up to 60 °C
- **Operating pressure :** 0 Up to 10 bar
- **Nominal sizes:** DN 8 to 65
- **Body configurations:** Angle valve body I Multi-port bodies
- **Connection types:** Clamp I Spigot
- **Connection standards:** ASME I DIN I EN I ISO
- **Body materials:** 1.4410, block material I 1.4435 (316L), block material I 1.4435 (BN2), block material I 1.4529, block material I 1.4539 (904L), block material I 2.4602, block material
- **Seal materials:** PTFE I Stainless steel/FKM/PTFE
- **Supply voltage:** 24 V DC
- **Actuating speed:** Max. 6 mm/s
- **Protection class :** IP 65
- **Conformities:** 3A I FDA I Regulation (EC) No. 1935/2004 I Regulation (EC) No. 2023/2006 I Regulation (EU) No. 10/2011 I USP

Technical data depends on the respective configuration

webcode: GW-567

Product comparison

	GEMÜ 567 eSyDrive	**GEMÜ 567 servoDrive**	**GEMÜ 567 BioStar control**	**GEMÜ 567 BioStar control**
Operation				
Manual	-	-	●	-
Pneumatic	-	-	-	●
Motorized	●	●	-	-
Nominal sizes	DN 8 Up to 65	DN 8 Up to 20	DN 8 Up to 25	DN 8 Up to 65
Operating pressure	0 Up to 10 bar	0 Up to 7 bar	0 Up to 10 bar	0 Up to 10 bar
Body material				
1.4410, block material	●	●	●	●
1.4435 (316L), block material	●	●	●	●
1.4435 (BN2), block material	●	●	●	●
1.4529, block material	●	●	●	●
1.4539 (904L), block material	●	●	●	●
2.4602, block material	●	●	●	●
Connection types				
Clamp	●	●	●	●
Spigot	●	●	●	●

Comparison data for eSyDrive/servoDrive

	eSyDrive	servoDrive
Service life	1,000,000 cycle duties	10,000,000 cycle duties
Speed	max. 6mm/s	max. 200mm/s
Operating pressure	0 to 10 bar	0 to 7 bar
Nominal sizes	DN 8 to 65	DN 8 to 20
Main function	OPEN/CLOSE, Positioner, Process controller	Function can be programmed variably in the control panel via external controller GEMÜ 1282 servoDrive
Interface	Digital and analogue inputs and outputs, Ethernet with integrated web server, Modbus TCP	Interface to external GEMÜ 1282 servoDrive controller. GEMÜ 1282 servoDrive controller available with various fieldbus interfaces.
Protection class	IP65	IP69K actuator IP65 connector plug
Power supply	24 V DC	48 V DC
Manual override	Yes	No
Optical position indicator	Yes	No
Electrical connection	Connector	Connector / cable exit
Self-locking	Yes	No

Product description eSyDrive

Construction

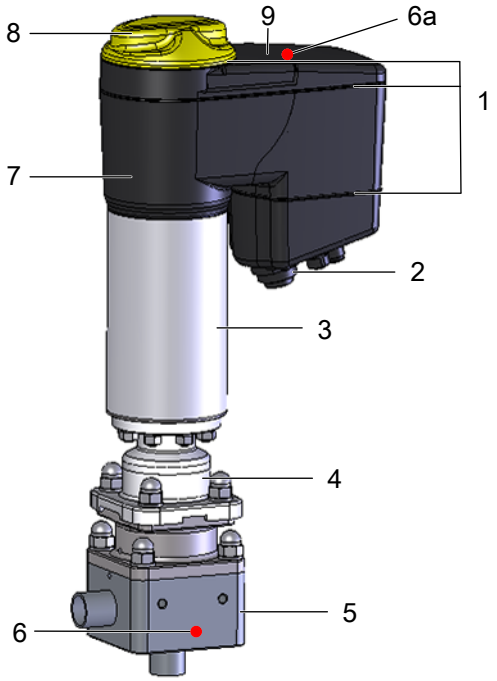

Item	Name	Materials
1	O-rings	EPDM
2	Electrical connections	
3	Actuator base	1.4301
4	Distance piece	1.4408
5	Valve body with leak detection hole	1.4435, 1.4539, 2.4602, 1.4410, 1.4529
6	CONEXO RFID chip	6 (AG2, AG4, AG5) 6a (AG3)
7	Optical position indicator	PC
8	Cover with high visibility LED, manual override and on-site control	PC
9	Actuator top	PC black

Flow direction

Installation position for optimized draining

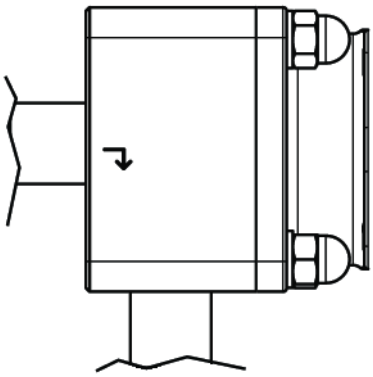

in closed and open position

Actuator horizontal

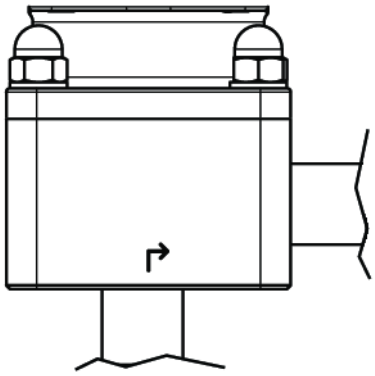

in open position

Actuator horizontal or vertical

Control range

We recommend designing the valves in such a way that the control range is within an opening stroke of 20% to 90% of the control valve.

PD seal system without bypass

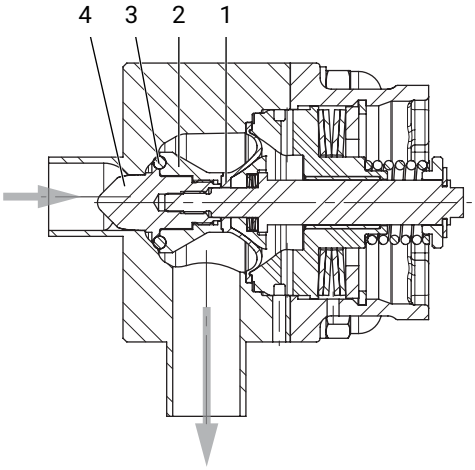

Seal material code 4

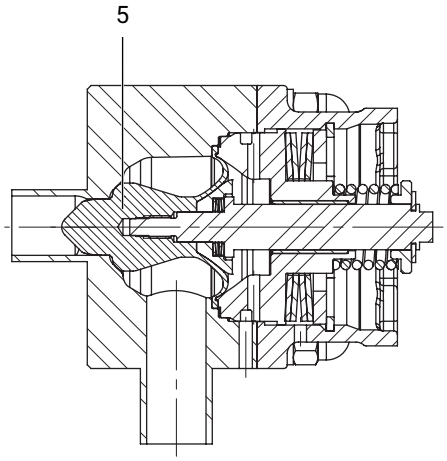

Seal material code 5

Item	Name	Materials
1	Plug diaphragm	PTFE
2	Support ring	1.4435, 1.4539, 2.4602, 1.4410, 1.4529
3	O-ring	FKM
4	Regulating cone	1.4435, 1.4539, 2.4602, 1.4410, 1.4529
5	Plug diaphragm with regulating cone	PTFE

PD seal system with bypass

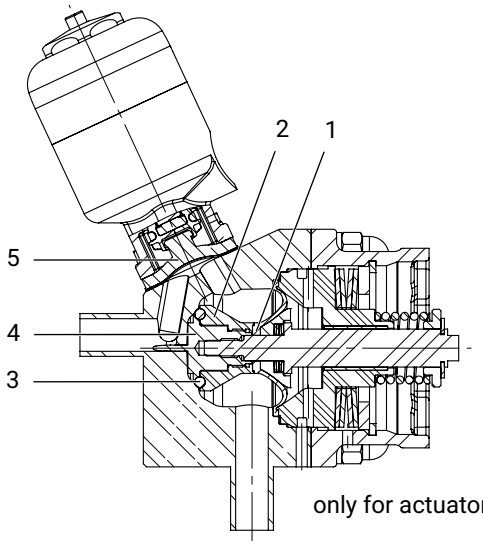

only for actuator size 2T1, 2V1

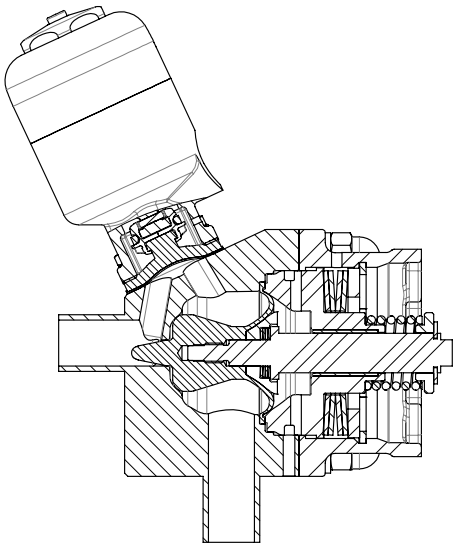

Item	Name	Materials
1	Plug diaphragm FKM, PTFE	PTFE
2	Support ring	1.4435, 1.4539, 2.4602, 1.4410, 1.4529
3	O-ring	FKM, FFKM
4	Regulating cone	1.4435, 1.4539, 2.4602, 1.4410, 1.4529
5	Bypass valve diaphragm	PTFE-EPDM, EPDM

GEMÜ CONEXO

The interaction of valve components that are equipped with RFID chips and an associated IT infrastructure actively increase process reliability.

Thanks to serialization, every valve and every relevant valve component such as the body, actuator or diaphragm, and even automation components, can be clearly traced and read using the CONEXO pen RFID reader. The CONEXO app, which can be installed on mobile devices, not only facilitates and improves the "installation qualification" process, but also makes the maintenance process much more transparent and easier to document. The app actively guides the maintenance technician through the maintenance schedule and directly provides him with all the information assigned to the valve, such as test reports, testing documentation and maintenance histories. The CONEXO portal acts as a central element, helping to collect, manage and process all data.

For further information on GEMÜ CONEXO please visit:
www.gemu-group.com/conexo

Ordering

GEMÜ Conexo must be ordered separately with the ordering option "CONEXO".

Availability

Availability of actuator sizes

Actuator size	Kv value	Code
2	80 l/h	AA
	100 l/h	AB
	160 l/h	BC
	250 l/h	BD
	400 l/h	BE
	630 l/h	CF
	1.0 m³/h	CG
	1.6 m³/h	DH
	2.6 m³/h	EJ
	4.1 m³/h	G1
3	8.0 m³/h	H2
	12.5 m³/h	J3
4	14.0 m³/h	K4
	18.0 m³/h	K5
	25.0 m³/h	K6
	32.0 m³/h	M7
	40.0 m³/h	M8
5	50.0 m³/h	N9
	63.0 m³/h	NK

Availability of valve bodies

Spigot without bypass

AG	DN	Connection type code [1]			
		0	17	59	60
2	8	-	X	-	X
	10	-	X	-	X
	15	X	X	X	X
	20	-	-	X	-
3	20	X	X	-	X
	25	X	X	X	X
4	32	-	X	-	X
	40	-	X	X	X
	50	-	-	X	-
5	50	-	X	-	X
	65	-	-	X	-

AG = actuator size

1) **Connection type**
Code 0: Spigot DIN
Code 17: Spigot EN 10357 series A/DIN 11866 series A formerly DIN 11850 series 2
Code 59: Spigot ASME BPE/DIN EN 10357 series C (from 2022 edition)/DIN 11866 series C
Code 60: Spigot ISO 1127/DIN EN 10357 series C (2014 edition)/DIN 11866 series B

Spigot with bypass

AG	DN	Connection type code [1]			
		0	17	59	60
2	8	-	X	-	X
	10	-	X	-	X
	15	X	X	X	X
	20	-	-	X	-

AG = actuator size

1) **Connection type**
Code 0: Spigot DIN
Code 17: Spigot EN 10357 series A/DIN 11866 series A formerly DIN 11850 series 2
Code 59: Spigot ASME BPE/DIN EN 10357 series C (from 2022 edition)/DIN 11866 series C
Code 60: Spigot ISO 1127/DIN EN 10357 series C (2014 edition)/DIN 11866 series B

Clamp without bypass

AG	DN	Connection type code [1]		
		82	86	88
2	**8**	X	X	-
	10	X	X	-
	15	X	X	X
	20	-	-	X
3	**20**	X	X	-
	25	X	X	X
4	**32**	X	X	-
	40	X	X	X
	50	-	-	X
5	**50**	X	X	-
	65	-	-	X

AG = actuator size

1) **Connection type**
Code 82: Clamp DIN 32676 series B
Code 86: Clamp DIN 32676 series A
Code 88: Clamp ASME BPE, for pipe ASME BPE

Clamp with bypass

AG	DN	Connection type code [1]		
		82	86	88
2	8	X	X	-
	10	X	X	-
	15	X	X	X
	20	-	-	X

AG = actuator size

1) **Connection type**
Code 82: Clamp DIN 32676 series B
Code 86: Clamp DIN 32676 series A
Code 88: Clamp ASME BPE, for pipe ASME BPE

Availability of grades of surface finish

Internal surface finishes for block material bodies [1]

Readings for Process Contact Surfaces	Mechanically polished [2]		Electropolished	
	Hygienic class DIN 11866	Code	Hygienic class DIN 11866	Code
Ra ≤ 0.40 µm	H4	1536	HE4	1537
Ra ≤ 0.25 µm [3]	H5	1527	HE5	1516

Readings for Process Contact Surfaces according to ASME BPE 2016 [4]	Mechanically polished [2]		Electropolished	
	ASME BPE Surface Designation	Code	ASME BPE Surface Designation	Code
Ra Max. = 0.51 µm (20 µinch)	SF1	SF1	SF5	SF5
Ra Max. = 0.38 µm (15 µinch)	-	-	SF4	SF4

Ra acc. to DIN EN ISO 4288 and ASME B46.1

1) Surface finishes of customized valve bodies may be limited in special cases.

2) Or any other finishing method that meets the Ra value (acc. to ASME BPE).

3) The maximum Ra finish achievable for pipe connections with an internal pipe diameter < 6 mm is 0.38 µm.

4) When using these surfaces, the bodies are marked according to the specifications of ASME BPE.
The surfaces are only available for valve bodies which are made of materials (e.g. GEMÜ material code 41) and use connections (e.g. GEMÜ connection codes 59, 80, 88) according to ASME BPE.

Order data - eSyDrive

The order data provide an overview of standard configurations.

Please check the availability before ordering. Other configurations available on request.

Order codes

1 Type	Code
Control valve	567

2 DN	Code
DN 8	8
DN 10	10
DN 15	15
DN 20	20
DN 25	25
DN 32	32
DN 40	40
DN 50	50
DN 65	65

3 Body configuration	Code
2-way angle body	E
2-way angle body with bypass	M

4 Connection type	Code
Spigot	
Spigot DIN	0
Spigot EN 10357 series A/DIN 11866 series A formerly DIN 11850 series 2	17
Spigot ASME BPE/DIN EN 10357 series C (from 2022 edition)/DIN 11866 series C	59
Spigot ISO 1127/DIN EN 10357 series C (2014 edition)/ DIN 11866 series B	60
Clamp	
Clamp DIN 32676 series B	82
Clamp DIN 32676 series A	86
Clamp ASME BPE, for pipe ASME BPE	88

5 Valve body material	Code
1.4435 (316L), block material	41
1.4435 (BN2), block material, Δ Fe < 0.5%	43
1.4539/UNS N08904, block material	44
2.4602, Alloy 22 block material, (NiCr21Mo14W)	A3
1.4410, block material	A7
1.4529, block material	A8

6 Seal material	Code
PTFE actuator seal/FKM seat seal	4
PTFE actuator seal/PTFE seat seal	5
PTFE actuator seal/FKM seat seal/EPDM bypass seal bypass diaphragm code 13	43
PTFE actuator seal/FKM seat seal/PTFE bypass seal bypass diaphragm code 54	45

6 Seal material	Code
PTFE actuator seal/FKM seat seal/EPDM bypass seal bypass diaphragm code 17	47
PTFE actuator seal/PTFE seat seal/PTFE bypass seal bypass diaphragm code 54	55
PTFE actuator seal/FFKM seat seal	F
PTFE actuator seal/FFKM seat seal/PTFE bypass seal bypass diaphragm code 54	F5

7 Voltage/Frequency	Code
24 V DC	C1

8 Control module	Code
OPEN/CLOSE, positioner and process controller	L0

9 Control characteristic	Code
Modified equal-percentage	G
Linear	L

10 Kv value	Code
80 l/h	AA
100 l/h	AB
160 l/h	BC
250 l/h	BD
400 l/h	BE
630 l/h	CF
1.0 m³/h	CG
1.6 m³/h	DH
2.6 m³/h	EJ
4.1 m³/h	G1
8.0 m³/h	H2
12.5 m³/h	J3
14.0 m³/h	K4
18.0 m³/h	K5
25.0 m³/h	K6
32.0 m³/h	M7
40.0 m³/h	M8
50.0 m³/h	N9
63.0 m³/h	NK

11 Bypass actuator version	Code
Pneumatically operated, normally closed, diaphragm size 8,	11
Pneumatically operated, normally open, diaphragm size 8,	12
Manually operated, with seal adjuster, diaphragm size 8,	S0

12 Surface	Code
Ra ≤ 0.25 µm (10 µin.) for media wetted surfaces *), in accordance with DIN 11866 HE5, electropolished internal/external, *) for inner pipe diameters < 6 mm, in the spigot Ra ≤ 0.38 µm	1516
Ra ≤ 0.25 µm (10 µin.) for media wetted surfaces *), in accordance with DIN 11866 H5, mechanically polished internal, *) for inner pipe diameters < 6 mm, in the spigot Ra ≤ 0.38 µm	1527
Ra ≤ 0.4 µm (15 µin.) for media wetted surfaces, in accordance with DIN 11866 H4, mechanically polished internal	1536
Ra ≤ 0.4 µm (15 µin.) for media wetted surfaces, in accordance with DIN 11866 HE4, electropolished internal/external	1537
Ra max. 0.51 µm (20 µin.) for media wetted surfaces, in accordance with ASME BPE SF1, mechanically polished internal	SF1

12 Surface	Code
Ra max. 0.38 µm (15 µin.) for media wetted surfaces, in accordance with ASME BPE SF4, electropolished internal/external	SF4
Ra max. 0.51 µm (20 µin.) for media wetted surfaces, in accordance with ASME BPE SF5, electropolished internal/external	SF5

13 Actuator+interface	Code
eSyDrive and analogue	DA

14 Special version	Code
Special version for 3A	M
Special version for oxygen, (max. temperature 60 °C; max. operating pressure 10 bar), flow direction only possible under the seat!	S

15 CONEXO	Code
Without	
Integrated RFID chip for electronic identification and traceability	C

Order example without bypass

Ordering option	Code	Description
1 Type	567	Control valve
2 DN	15	DN 15
3 Body configuration	M	2-way angle body with bypass
4 Connection type	17	Spigot EN 10357 series A/DIN 11866 series A formerly DIN 11850 series 2
5 Valve body material	41	1.4435 (316L), block material
6 Seal material	55	PTFE actuator seal/PTFE seat seal/PTFE bypass seal bypass diaphragm code 54
7 Voltage/Frequency	C1	24 V DC
8 Control module	L0	OPEN/CLOSE, positioner and process controller
9 Control characteristic	G	Modified equal-percentage
10 Kv value	G1	4.1 m³/h
11 Bypass actuator version	S0	Manually operated, with seal adjuster, diaphragm size 8,
12 Surface	1536	Ra ≤ 0.4 µm (15 µin.) for media wetted surfaces, in accordance with DIN 11866 H4, mechanically polished internal
13 Actuator+interface	DA	eSyDrive and analogue
14 Special version	M	Special version for 3A
15 CONEXO	C	Integrated RFID chip for electronic identification and traceability

Technical data

Medium

Working medium: Corrosive, inert, gaseous and liquid media which have no negative impact on the physical and chemical properties of the body and diaphragm material.

Temperature

Media temperature:

Without bypass	-10 — 160 °C
With bypass	-10 — 100 °C

Observe pressure/temperature diagram

Sterilization temperature:

Seat seal FKM, FFKM without bypass, (code 4, F)	160 °C [1], steam max. 30 min [2]
Seat seal PTFE without bypass, (code 5)	160 °C [1], steam max. 30 min [2]
Seat seal FKM, FFKM bypass diaphragm material EPDM, (code 43, F3)	150 °C [3], max. 30 min
Seat seal FKM, FFKM bypass diaphragm material PTFE/EPDM, PTFE laminated, (code 45, F5)	150 °C [3], max. 30 min
Seat seal FKM, FFKM bypass diaphragm material EPDM, (code 47, F7)	150 °C [3], max. 30 min
Seat seal PTFE bypass diaphragm material PTFE/EPDM, PTFE laminated, (code 55)	150 °C [3], max. 30 min

1) The sterilization temperature is only valid for steam (saturated steam) or superheated water.

2) Longer sterilization times or continuous operation on request.

3) If the sterilization temperatures listed above are applied to the EPDM diaphragms for longer periods of time, the service life of the diaphragms will be reduced. In these cases, maintenance cycles must be adapted accordingly. This also applies to PTFE diaphragms exposed to high temperature fluctuations. The maintenance cycles must be adapted accordingly.

Ambient temperature: -10 — 60 °C

Storage temperature: 0 — 40 °C

Pressure

Operating pressure: 0 — 10 bar

All pressures are bar – gauge pressure. Operating pressure values were determined with static operating pressure applied on one side of a closed valve. Sealing at the valve seat and atmospheric sealing is ensured for the given values.

Information on operating pressures applied on both sides and for high purity media on request.

Operating pressure:

Pressure/Temperature diagram

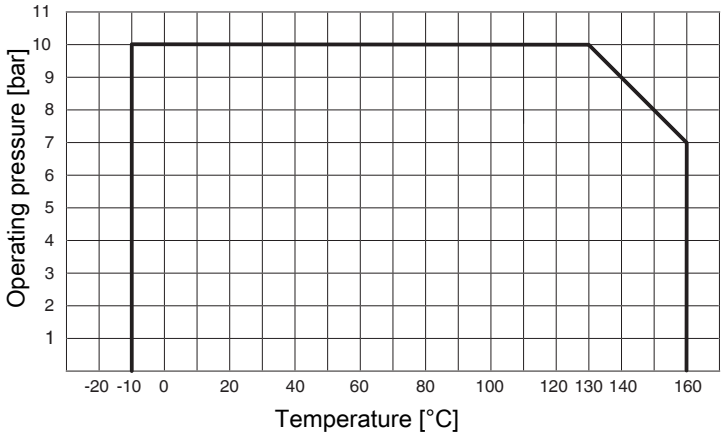

Leakage rate:

Control valve

Seat seal	Standard	Test procedure	Leakage rate	Test medium
FKM, PTFE	DIN EN 60534-4	1	VI	Air

Kv values:

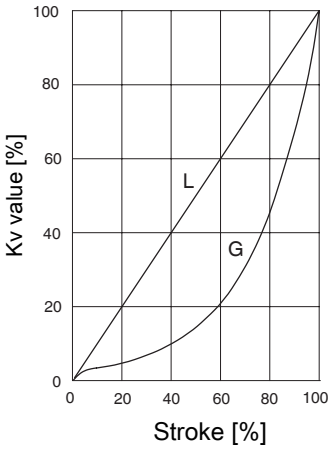

Kv values:

Code 17, 60, 82 and 86

AG	Seal material code	Control characteristic	Kv value	DN 8	DN 10	DN 15	DN 20	DN 25	DN 32	DN 40	DN 50
2	4, 43, 45, 47, F, F5	GAA, LAA	80 l/h	X	X	X	-	-	-	-	-
		GAB, LAB	100 l/h	X	X	X	-	-	-	-	-
		GBC, LBC	160 l/h	X	X	X	-	-	-	-	-
		GBD, LBD	250 l/h	X	X	X	-	-	-	-	-
		GBE, LBE	400 l/h	X	X	X	-	-	-	-	-
	5, 55	GCF, LCF	630 l/h	X	X	X	-	-	-	-	-
		GCG, LCG	1.0 m³/h	-	X	X	-	-	-	-	-
		GDH, LDH	1.6 m³/h	-	X	X	-	-	-	-	-
		GEJ, LEJ	2.6 m³/h	-	-	X	-	-	-	-	-
		GG1, LG1	4.1 m³/h	-	-	X	-	-	-	-	-
3	5	GH2, LH2	8.0 m³/h	-	-	-	X	X	-	-	-
		GJ3, LJ3	12.5 m³/h	-	-	-	-	X	-	-	-
4	5	GK4, LK4	14.0 m³/h	-	-	-	-	-	X	X	-
		GK5, LK5	18.0 m³/h	-	-	-	-	-	X	X	-
		GK6, LK6	25.0 m³/h	-	-	-	-	-	X	X	-
		GM7, LM7	32.0 m³/h	-	-	-	-	-	-	X	-
		GM8, LM8	40.0 m³/h	-	-	-	-	-	-	X	-
5	5	GN9, LN9	50.0 m³/h	-	-	-	-	-	-	-	X
		GNK, LNK	63.0 m³/h	-	-	-	-	-	-	-	X

Code 59 and 88

AG	Seal material code	Control characteristic	Kv value	DN 15	DN 20	DN 25	DN 40	DN 50	DN 65
2	4, 43, 45, 47, F, F5	GAA, LAA	80 l/h	X	X	-	-	-	-
		GAB, LAB	100 l/h	X	X	-	-	-	-
		GBC, LBC	160 l/h	X	X	-	-	-	-
		GBD, LBD	250 l/h	X	X	-	-	-	-
		GBE, LBE	400 l/h	X	X	-	-	-	-
	5, 55	GCF, LCF	630 l/h	X	X	-	-	-	-
		GCG, LCG	1.0 m³/h	X	X	-	-	-	-
		GDH, LDH	1.6 m³/h	X	X	-	-	-	-
		GEJ, LEJ	2.6 m³/h	-	X	-	-	-	-
		GG1, LG1	4.1 m³/h	-	X	-	-	-	-
3	5	GH2, LH2	8.0 m³/h	-	-	X	-	-	-
4	5	GK4, LK4	14.0 m³/h	-	-	-	X	X	-
		GK5, LK5	18.0 m³/h	-	-	-	X	X	-
		GK6, LK6	25.0 m³/h	-	-	-	X	X	-
		GM7, LM7	32.0 m³/h	-	-	-	-	X	-
		GM8, LM8	40.0 m³/h	-	-	-	-	X	-
5	5	GN9, LN9	50.0 m³/h	-	-	-	-	-	X
		GNK, LNK	63.0 m³/h	-	-	-	-	-	X

Kv values:

Bypass (only available in AG2)

DN	Connection type code		
	0, 17, 86	60, 82	59, 88
8	1.5 m^3/h	1.8 m^3/h	-
10	1.8 m^3/h	2.1 m^3/h	-
15	2.1 m^3/h	2.1 m^3/h	1.8 m^3/h
20	-	-	2.1 m^3/h

AG = actuator size
Kv values determined acc.to DIN EN 60534.

Product compliance

Pressure Equipment Directive:	2014/68/EU
Machinery Directive:	2006/42/EC
EMC Directive:	2014/30/EU Technical standards used: Interference resistance: EN 61000-6-2:2005/AC:2005 EN 61326-1:2013 EN 61800-3:2004/A1:2012 Interference emission: EN 61000-6-4:2007/A1:2011 (only AG0 and AG1) EN 61800-3:2004/A1:2012 EN 61326-1:2013 (only AG0 and AG1)
Food:	Regulation (EC) No. 1935/2004* Regulation (EC) No. 10/2011* FDA* USP* Class VI * depending on version and/or operating parameters

Mechanical data

Protection class:	IP 65 acc. to EN 60529	
Weight:	**Actuator**	
	Actuator size 2	2.86 kg
	Actuator size 3	4.56 kg
	Actuator size 4	11.52 kg
	Actuator size 5	14.44 kg
	Body	
	Actuator size 2	1.6 kg
	Actuator size 3	2.8 kg
	Actuator size 4	4.3 kg
	Actuator size 5	7.6 kg
Actuating speed:	Actuator size 2	adjustable, max. 6 mm/s
	Actuator size 3	adjustable, max. 6 mm/s
	Actuator size 4	adjustable, max. 4 mm/s
	Actuator size 5	adjustable, max. 4 mm/s

Duty cycle and service life

Service life:	**Control operation** - Class C acc. to EN 15714-2 (1,800,000 start-ups and 1200 start-ups per hour). **Open / Close duty** - Minimum 1,000,000 switching cycles at room temperature and permissible duty cycle.
Duty cycle:	**Control operation** - Class C acc. to EN 15714-2. **Open/Close duty** - 100%

Electrical data

Supply voltage

	Actuator size 2	Actuator size 3	Actuator size 4, 5
Voltage	Uv = 24 V DC ± 10%		
Rating	Max. 28 W	Max. 65 W	Max. 120 W
Reverse battery protection	Yes		

Analogue input signals

Set value

Input signal: 0/4 - 20 mA; 0 – 10 V DC (selectable using software)

Input type: passive

Input resistance: 250 Ω

Accuracy/linearity: ≤ ±0.3% of full scale value

Temperature drift: ≤ ±0.1% / 10°K

Resolution: 12 bit

Reverse polarity protection: No

Overload proof: Yes (up to ± 24 V DC)

Process actual value

Input signal: 0/4 - 20 mA; 0 – 10 V DC (selectable using software)

Input type: passive

Input resistance: 250 Ω

Accuracy/linearity: ≤ ±0.3% of full scale value

Temperature drift: ≤ ±0.1% / 10°K

Resolution: 12 bit

Reverse polarity protection: No

Overload proof: Yes (up to ± 24 V DC)

Digital input signals

Digital inputs: 3

Function: Can be selected using software

Voltage: 24 V DC

Logic level "1": >14 V DC

Logic level "0": < 8 V DC

Input current: typ. 2.5 mA (at 24 V DC)

Analogue output signals

Actual value

Output signal:	0/4 - 20 mA; 0 – 10 V DC (selectable using software)
Output type:	Active (AD5412)
Accuracy:	≤ ±1% of full scale value
Temperature drift:	≤ ±0.1% / 10°K
Load resistor:	≤ 750 kΩ
Resolution:	10 bit
Overload proof:	Yes (up to ± 24 V DC)
Short-circuit proof:	Yes

Digital output signals

Switching outputs 1 and 2

Design:	2x make contact, potential-free
Switching voltage:	max. 48 V DC / 48 V AC
Switch rating:	max. 60 W / 2A
Switch points:	Adjustable 0 - 100 %

Switching output 3

Function:	Signal fault
Type of contact:	Push-Pull
Switching voltage:	Supply voltage
Switching current:	≤ 0.1 A
Drop voltage:	Max. 2.5 V DC at 0.1 A
Overload proof:	Yes (up to ± 24 V DC)
Short-circuit proof:	Yes
Pull-Down resistance:	120 kΩ

Communication eSy-Web

Interface:	Ethernet
Function:	Parameterisation via web browser
IP address:	192.168.2.1 alterable via web browser
Subnet screen:	255.255.252.0 alterable via web browser

The actuator and the PC must be in the same network to use the web server. The IP address of the actuator is entered in the web browser and the actuator can then be parametrised. In order to use more than one actuator, a definitive IP address must be assigned to each actuator in the same network.

Communication Modus TCP

Interface: Modbus TCP

IP address: 192.168.2.1 alterable via web browser

Subnet screen: 255.255.252.0 alterable via web browser

Port: 502

Supported function codes:

Code Dezimal	Code Hex	Function
3	0x03	Read Holding Registers
4	0x04	Read Input Registers
6	0x06	Write Single Register
16	0x10	Write Multiple Registers
23	0x17	Read / Write Multiple Registers

Behaviour in the event of an error

Function: In the event of an error the valve moves to the error position.

Notes: Moving to the error position is only possible with full power supply. This behaviour is not a safety position. The valve must be operated with a GEMÜ 1571 emergency power supply module (see accessories) to ensure the function in case of voltage loss.

Error position: Closed, open or hold (adjustable via eSy-web web interface).

Electrical connection

Connection X1

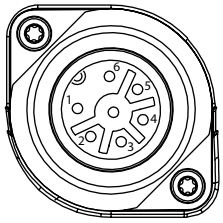

7-pin plug, Binder, type 693

Pin	Signal name
Pin 1	Uv, 24 V DC supply voltage
Pin 2	Uv GND
Pin 3	Relay output K1, common
Pin 4	Relay output K1, make contact
Pin 5	Relay output K2, common
Pin 6	Relay output K2, make contact
Pin PE	Function earth

Connection X2

5-pin M12 built-in socket, D-coded

Pin	Signal name
Pin 1	Tx + (Ethernet)
Pin 2	Rx + (Ethernet)
Pin 3	Tx - (Ethernet)
Pin 4	Rx - (Ethernet)
Pin 5	Shield

Connection X3

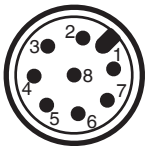

8-pin M12 plug, A-coded

Pin	Signal name
Pin 1	W+ set value input
Pin 2	W – set value input
Pin 3	X + actual value output
Pin 4	GND (actual value output, digital input 1 – 3, error message output)
Pin 5	Error message output 24 V DC
Pin 6	Digital input 3
Pin 7	Digital input 1
Pin 8	Digital input 2

Connection X4

4-pin M12 built-in socket, A-coded

Pin	Signal name
Pin 1	UV, 24 V DC actual value supply
Pin 2	n.c.
Pin 3	GND (actual value supply, actual value input)
Pin 4	X+, process actual value input
Pin 5	n.c.

Connection diagram

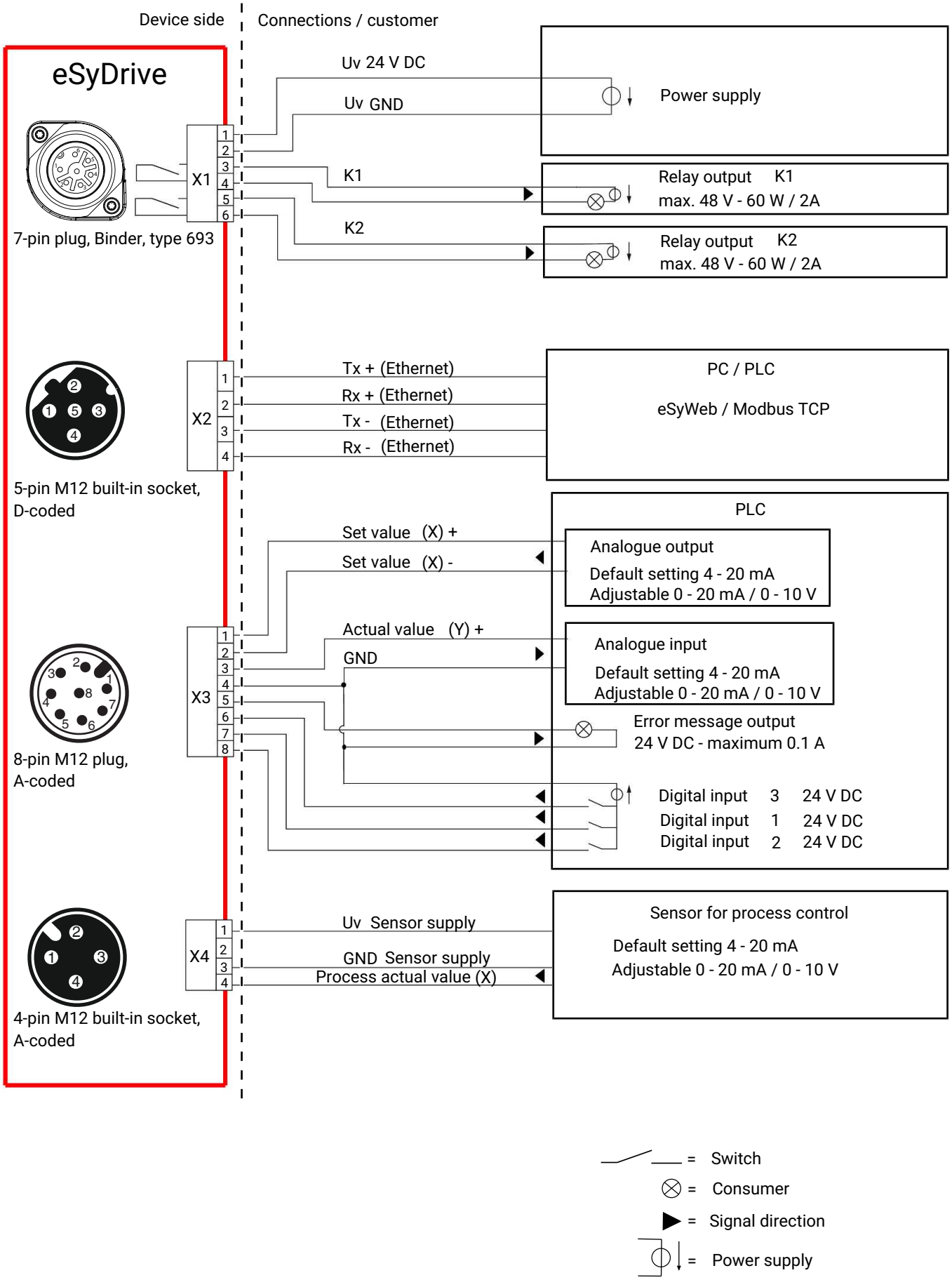

Dimensions

Actuator dimensions

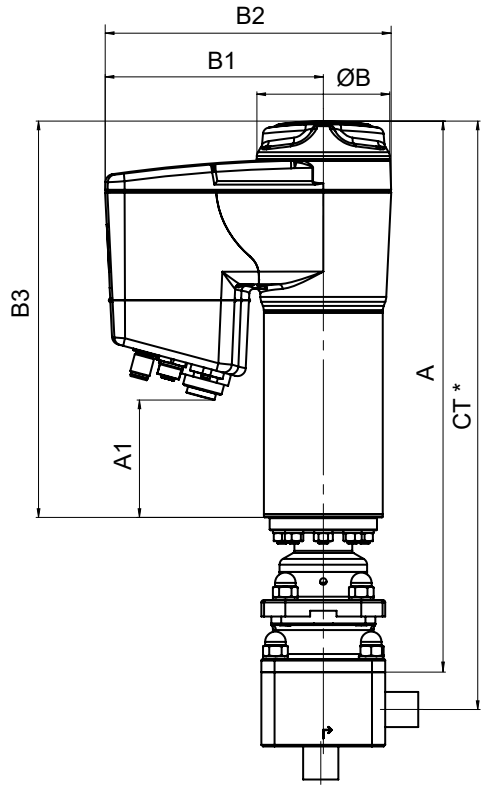

DN	Actuator size	A	A1	ØB	B1	B2	B3
8 - 20	2	263.7	44.0	68.0	126.0	160.0	190.0
20 - 25	3	351.5	83.0	82.0	132.0	172.0	250.0
32 - 50	4	411.5	124.0	134.0	157.0	224.0	296.0
50 - 65	5	433.0	124.0	134.0	157.0	224.0	296.0

Dimensions in mm
* CT = A + H1 (see body dimensions)

Body dimensions

Spigot without bypass code 0

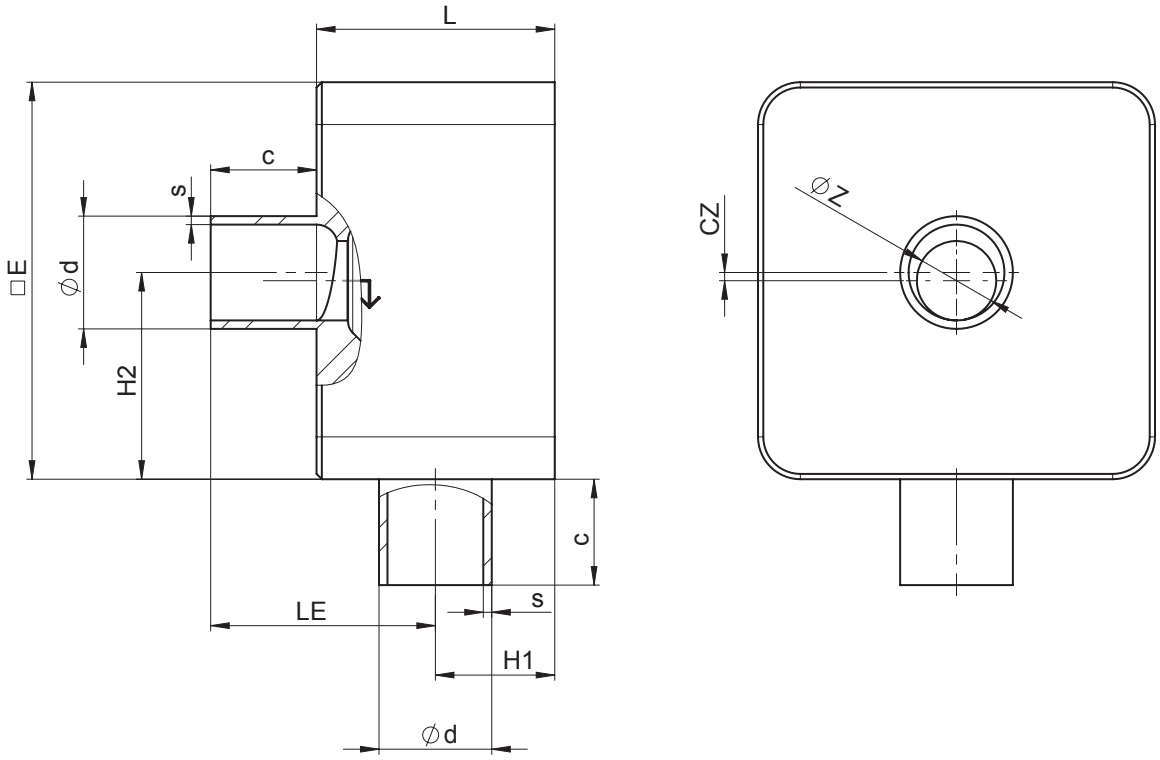

AG	DN	Connection type code 0 [1]										
		Seat size (code)	L	□E	c	Øz	LE	H1	H2	cz	Ød	s
2	15	A	45.0	75.0	20.0	2.0	44.0	21.0	40.5	6.5	18.0	1.5
		B	45.0	75.0	20.0	4.0	44.0	21.0	39.5	5.5	18.0	1.5
		C	45.0	75.0	20.0	6.0	44.0	21.0	38.5	4.5	18.0	1.5
		D	45.0	75.0	20.0	8.0	44.0	21.0	41.0	3.5	18.0	1.5
		E	45.0	75.0	20.0	10.0	44.0	21.0	40.0	2.5	18.0	1.5
		G	45.0	75.0	20.0	15.0	44.0	21.0	37.5	0.0	18.0	1.5
3	20	H	55.0	95.0	25.0	20.0	54.0	26.0	50.0	0.0	22.0	1.5
	25	H	55.0	95.0	25.0	20.0	54.0	26.0	50.0	2.5	28.0	1.5
		J	55.0	95.0	25.0	25.0	54.0	26.0	47.5	0.0	28.0	1.5

Dimensions in mm
AG = actuator size

1) **Connection type**
Code 0: Spigot DIN

Spigot without bypass code 17

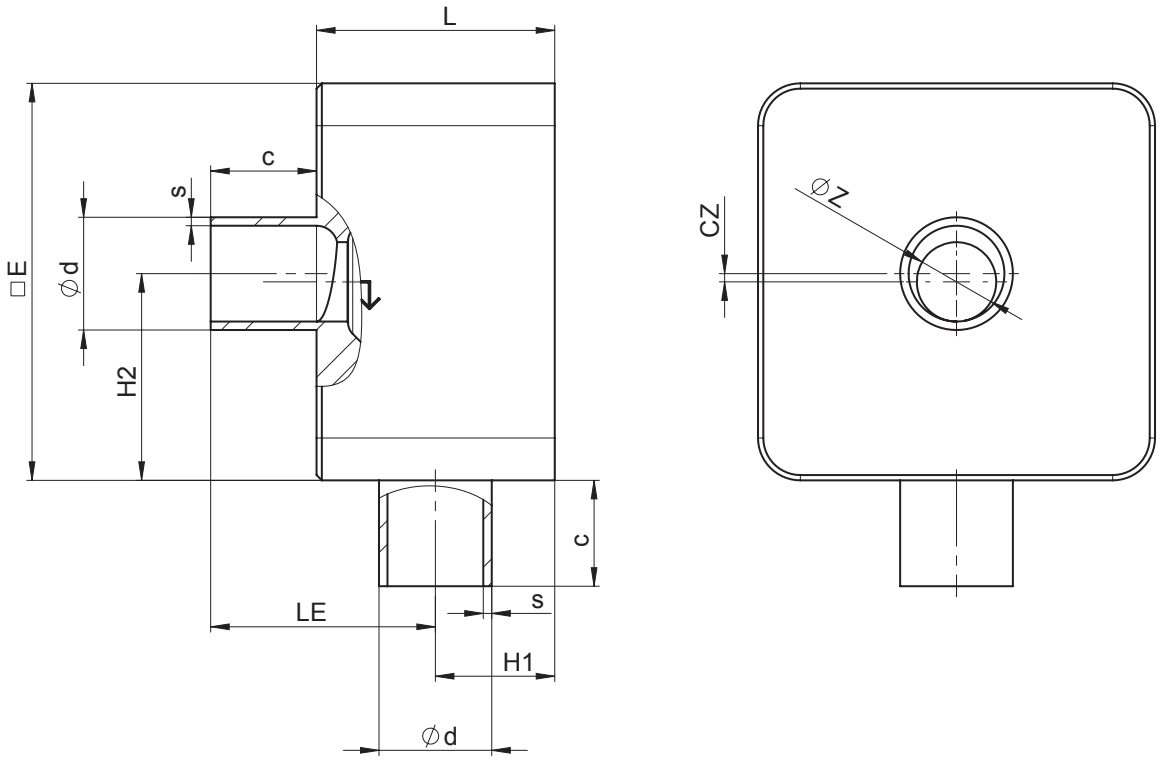

AG	DN	Connection type code 17 [1]										
		Seat size (code)	L	□E	c	Øz	LE	H1	H2	cz	Ød	s
2	8	A	45.0	75.0	20.0	2.0	47.5	17.5	40.5	3.0	10.0	1.0
		B	45.0	75.0	20.0	4.0	47.5	17.5	39.5	2.0	10.0	1.0
		C	45.0	75.0	20.0	6.0	47.5	17.5	38.5	1.0	10.0	1.0
	10	A	45.0	75.0	20.0	2.0	46.5	18.5	41.5	4.0	13.0	1.5
		B	45.0	75.0	20.0	4.0	46.5	18.5	40.5	3.0	13.0	1.5
		C	45.0	75.0	20.0	6.0	46.5	18.5	39.5	2.0	13.0	1.5
		D	45.0	75.0	20.0	8.0	46.5	18.5	38.5	1.0	13.0	1.5
	15	A	45.0	75.0	20.0	2.0	43.5	21.5	44.5	7.0	19.0	1.5
		B	45.0	75.0	20.0	4.0	43.5	21.5	43.5	6.0	19.0	1.5
		C	45.0	75.0	20.0	6.0	43.5	21.5	42.5	5.0	19.0	1.5
		D	45.0	75.0	20.0	8.0	43.5	21.5	41.5	4.0	19.0	1.5
		E	45.0	75.0	20.0	10.0	43.5	21.5	40.5	3.0	19.0	1.5
		G	45.0	75.0	20.0	15.0	43.5	21.5	38.0	0.5	19.0	1.5
3	20	H	55.0	95.0	25.0	20.0	56.5	23.5	47.5	0.0	23.0	1.5
	25	H	55.0	95.0	25.0	20.0	53.5	26.5	50.5	3.0	29.0	1.5
		J	55.0	95.0	25.0	25.0	53.5	26.5	48.0	0.5	29.0	1.5

Dimensions in mm
AG = actuator size

1) **Connection type**
Code 17: Spigot EN 10357 series A/DIN 11866 series A formerly DIN 11850 series 2

Spigot without bypass code 17

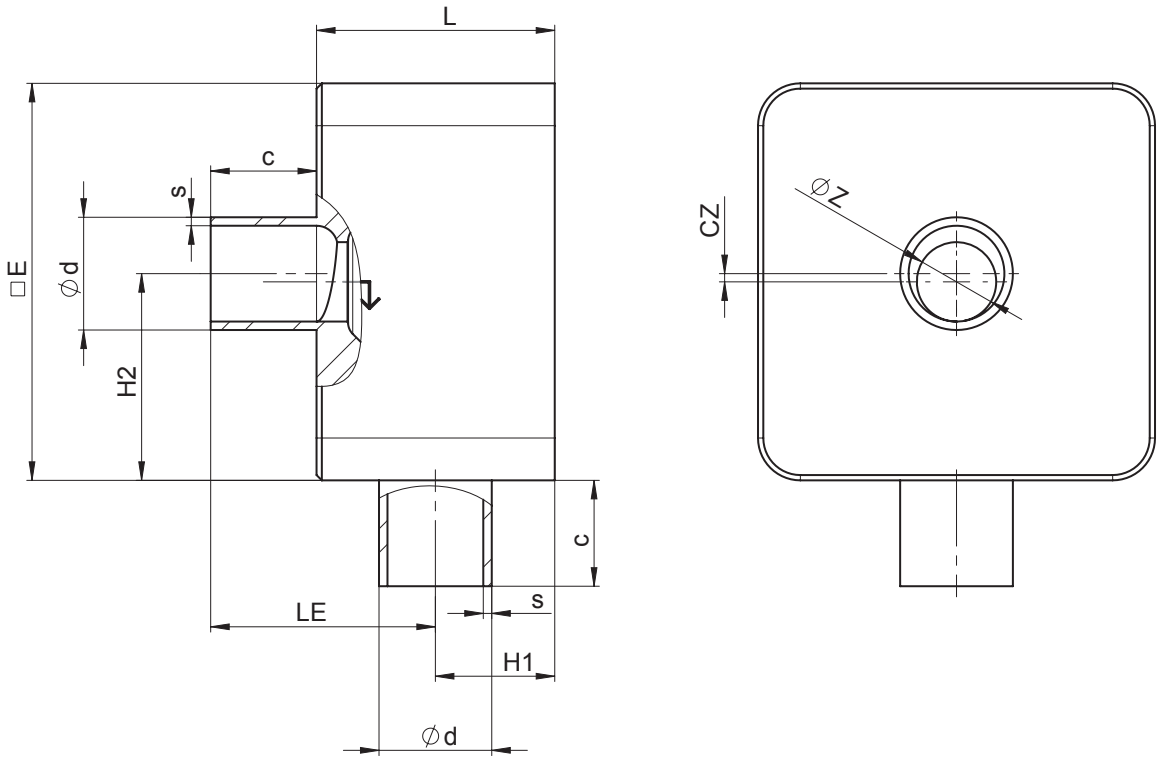

AG	DN	Connection type code 17 [1]										
		Seat size (code)	L	□E	c	Øz	LE	H1	H2	cz	Ød	s
4	**32**	**K**	73.0	112.0	25.0	32.0	67.0	31.0	54.5	1.5	38.0	1.5
	40	**K**	73.0	112.0	25.0	32.0	60.6	32.6	53.0	3.0	41.0	1.5
		M	73.0	112.0	25.0	38.0	60.6	32.6	56.0	0.0	41.0	1.5
5	**50**	**N**	84.0	140.0	30.0	50.0	70.3	38.6	90.0	0.0	53.0	1.5

Dimensions in mm
AG = actuator size

1) **Connection type**
Code 17: Spigot EN 10357 series A/DIN 11866 series A formerly DIN 11850 series 2

Spigot without bypass code 59

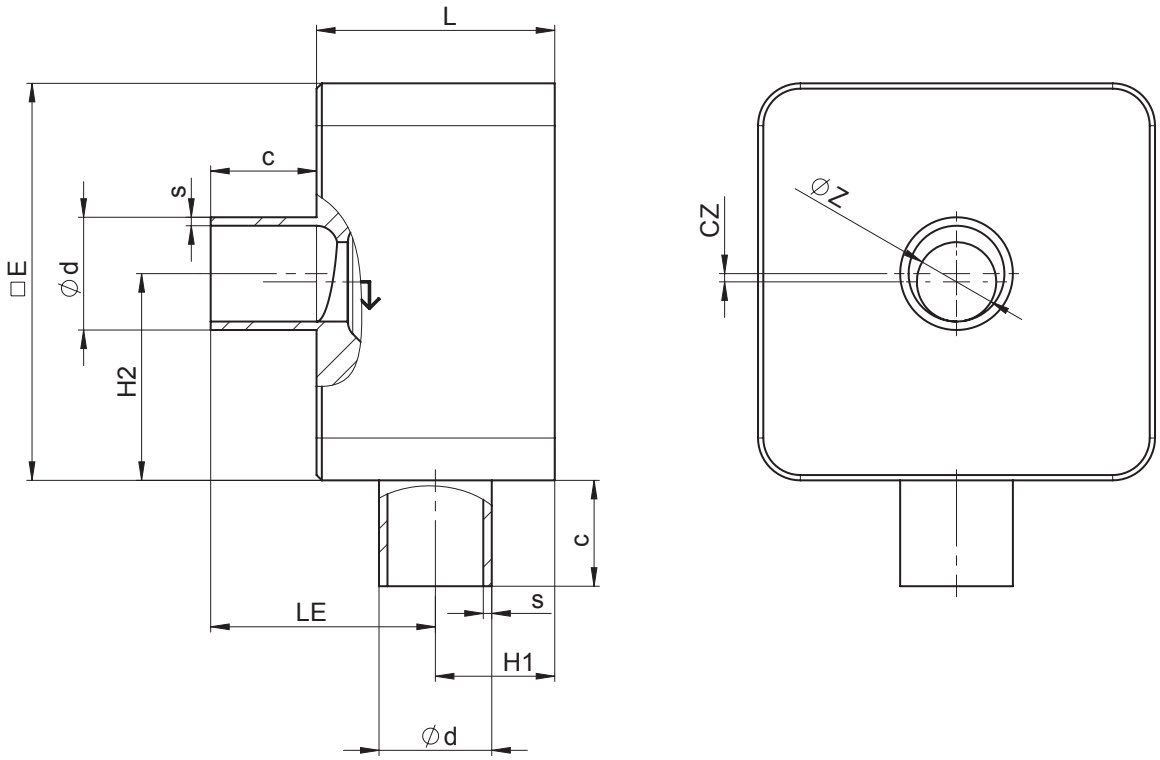

AG	DN	Connection type code 59 [1]										
		Seat size (code)	L	□E	c	Øz	LE	H1	H2	cz	Ød	s
2	15	A	45.0	75.0	20.0	2.0	46.8	18.2	41.20	3.70	12.70	1.65
		B	45.0	75.0	20.0	4.0	46.8	18.2	40.20	2.70	12.70	1.65
		C	45.0	75.0	20.0	6.0	46.8	18.2	39.20	1.70	12.70	1.65
		D	45.0	75.0	20.0	8.0	46.8	18.2	38.20	0.70	12.70	1.65
	20	A	45.0	75.0	20.0	2.0	48.6	21.4	44.38	6.88	19.05	1.65
		B	45.0	75.0	20.0	4.0	43.6	21.4	43.38	5.88	19.05	1.65
		C	45.0	75.0	20.0	6.0	43.6	21.4	42.38	4.88	19.05	1.65
		D	45.0	75.0	20.0	8.0	43.6	21.4	41.38	3.88	19.05	1.65
		E	45.0	75.0	20.0	10.0	43.6	21.4	40.38	2.88	19.05	1.65
		G	45.0	75.0	20.0	15.0	43.6	21.4	37.88	0.38	19.05	1.65
3	25	H	55.0	95.0	25.0	20.0	55.4	24.6	48.60	1.10	25.40	1.65

Dimensions in mm
AG = actuator size

1) **Connection type**
Code 59: Spigot ASME BPE/DIN EN 10357 series C (from 2022 edition)/DIN 11866 series C

Spigot without bypass code 59

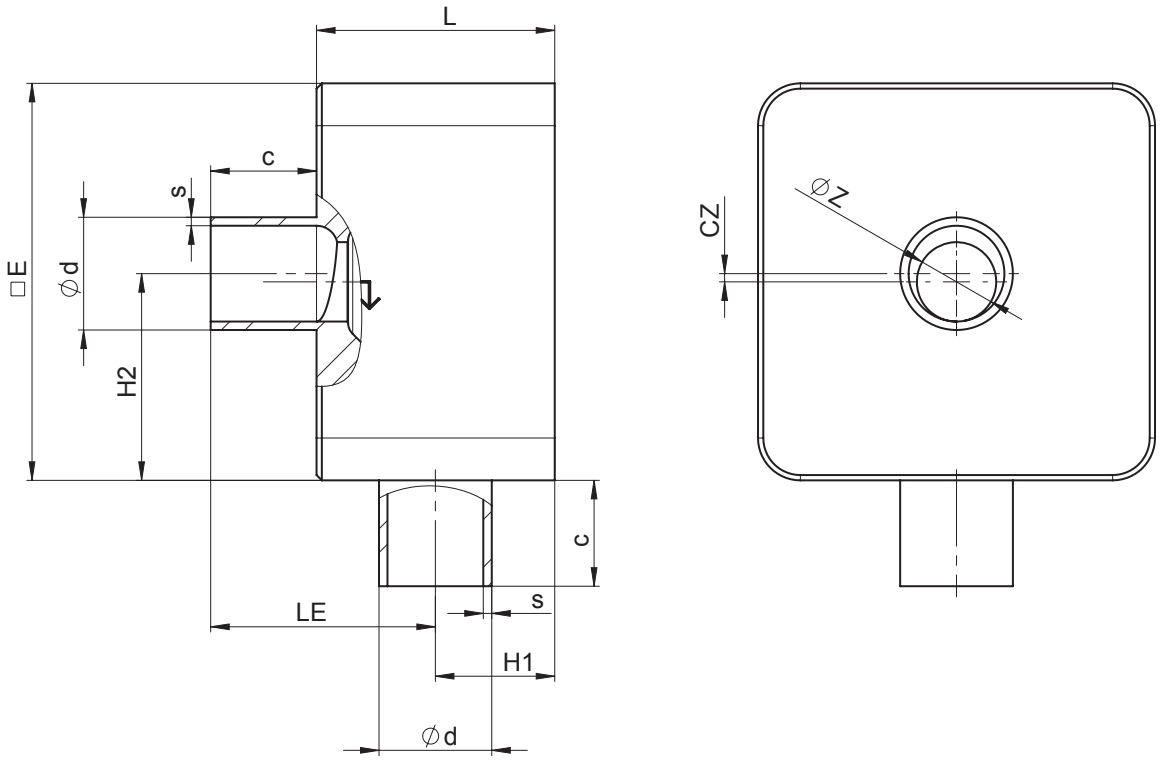

AG	DN	Connection type code 59 [1]										
		Seat size (code)	L	□E	c	Øz	LE	H1	H2	cz	Ød	s
4	**40**	**K**	73.0	112.0	25.0	32.0	67.0	31.0	54.6	1.4	38.1	1.65
	50	**K**	73.0	112.0	25.0	32.0	60.6	37.4	48.25	7.75	50.8	1.65
		M	73.0	112.0	25.0	38.0	60.6	37.4	51.25	4.75	50.8	1.65
5	**65**	**N**	84.0	140.0	30.0	50.0	70.3	43.7	84.9	5.1	63.5	1.65

Dimensions in mm
AG = actuator size

1) **Connection type**
Code 59: Spigot ASME BPE/DIN EN 10357 series C (from 2022 edition)/DIN 11866 series C

Spigot without bypass code 60

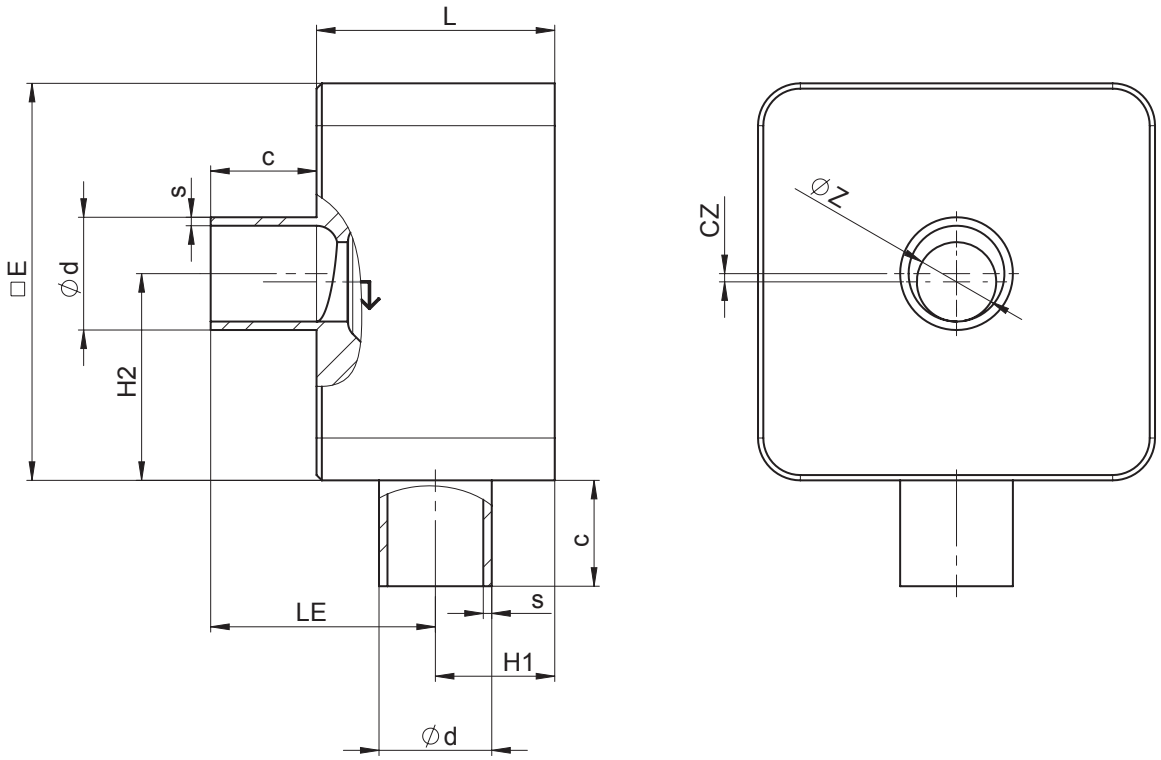

AG	DN	Connection type code 60 [1]										
		Seat size (code)	L	□E	c	Øz	LE	H1	H2	cz	Ød	s
2	8	A	45.0	75.0	20.0	2.0	46.3	18.7	41.65	4.15	13.5	1.6
		B	45.0	75.0	20.0	4.0	46.3	18.7	40.65	3.15	13.5	1.6
		C	45.0	75.0	20.0	6.0	46.3	18.7	39.65	2.15	13.5	1.6
	10	A	45.0	75.0	20.0	2.0	44.5	20.5	43.50	6.00	17.2	1.6
		B	45.0	75.0	20.0	4.0	44.5	20.5	42.50	5.00	17.2	1.6
		C	45.0	75.0	20.0	6.0	44.5	20.5	41.50	4.00	17.2	1.6
		D	45.0	75.0	20.0	8.0	44.5	20.5	40.50	3.00	17.2	1.6
	15	A	45.0	75.0	20.0	2.0	42.4	22.6	45.55	8.05	21.3	1.6
		B	45.0	75.0	20.0	4.0	42.4	22.6	44.55	7.05	21.3	1.6
		C	45.0	75.0	20.0	6.0	42.4	22.6	43.55	6.05	21.3	1.6
		D	45.0	75.0	20.0	8.0	42.4	22.6	42.55	5.05	21.3	1.6
		E	45.0	75.0	20.0	10.0	42.4	22.6	41.55	4.05	21.3	1.6
		G	45.0	75.0	20.0	15.0	42.4	22.6	39.05	1.55	21.3	1.6
3	20	H	55.0	95.0	25.0	20.0	54.6	25.4	49.40	1.90	29.6	1.6
	25	H	55.0	95.0	25.0	20.0	54.6	28.4	52.40	4.90	33.7	2.0
		J	55.0	95.0	25.0	25.0	51.6	28.4	49.90	2.40	33.7	2.0

Dimensions in mm
AG = actuator size

1) **Connection type**
Code 60: Spigot ISO 1127/DIN EN 10357 series C (2014 edition)/DIN 11866 series B

Spigot without bypass code 60

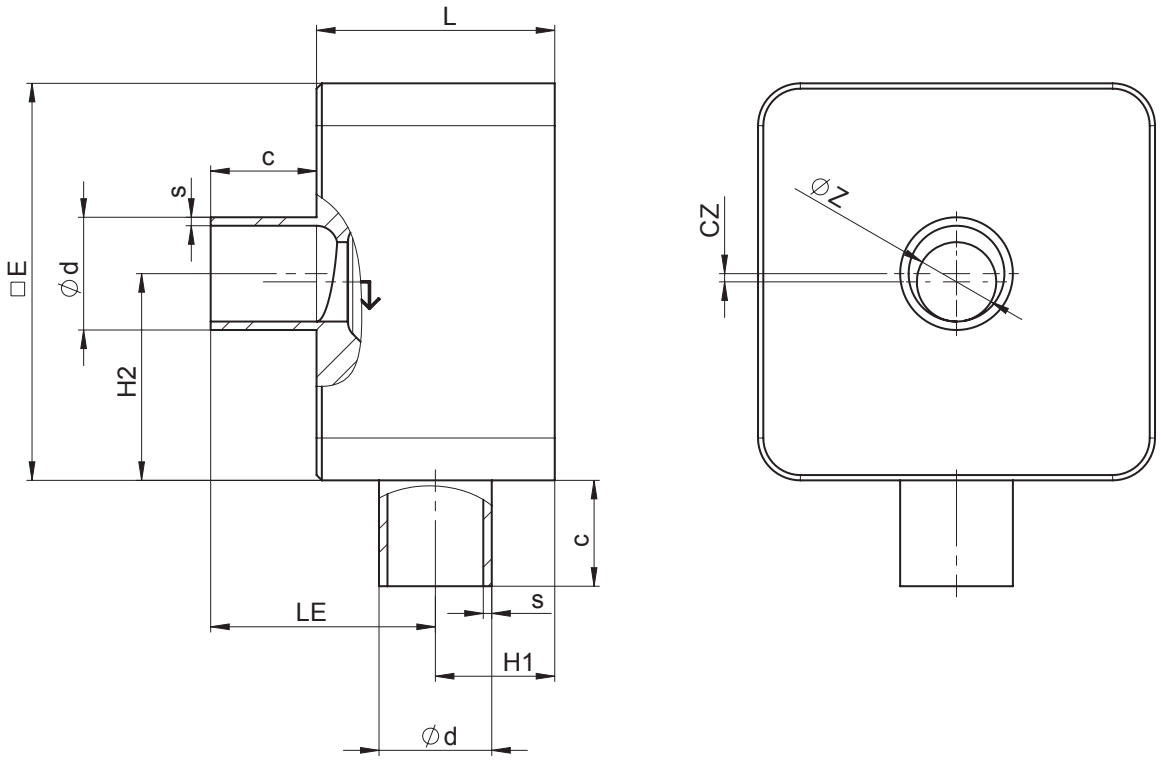

AG	DN	Connection type code 60 [1]										
		Seat size (code)	L	□E	c	Øz	LE	H1	H2	cz	Ød	s
4	**32**	**K**	73.0	112.0	25.0	32.0	65.8	32.8	52.8	3.2	42.4	2.0
	40	**K**	73.0	112.0	25.0	32.0	62.2	35.8	49.85	6.15	48.3	2.0
		M	73.0	112.0	25.0	38.0	62.2	35.8	52.85	3.15	48.3	2.0
5	**50**	**N**	84.0	140.0	30.0	50.0	72.3	41.7	93.15	3.15	60.3	2.0

Dimensions in mm
AG = actuator size

1) **Connection type**
Code 60: Spigot ISO 1127/DIN EN 10357 series C (2014 edition)/DIN 11866 series B

Spigot with bypass code 0

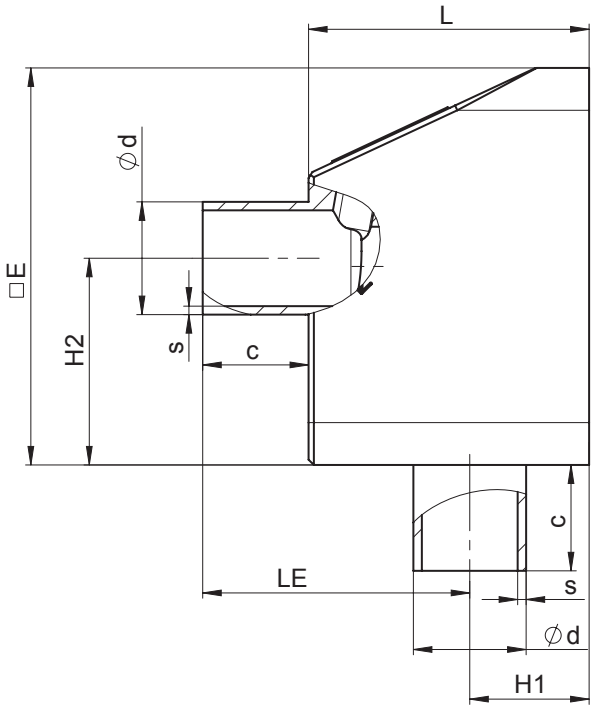

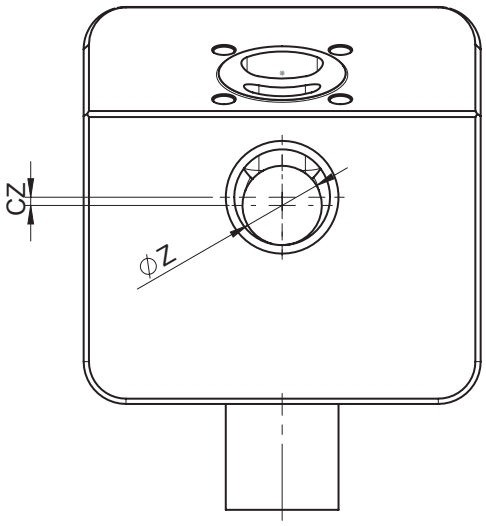

AG	DN	Connection type code 0 [1]										
		Seat size (code)	L	□E	c	Øz	LE	H1	H2	cz	Ød	s
2	**15**	**A**	53.0	75.0	20.0	2.0	52.0	21.0	44.0	6.5	18.0	1.5
		B	53.0	75.0	20.0	4.0	52.0	21.0	43.0	5.5	18.0	1.5
		C	53.0	75.0	20.0	6.0	52.0	21.0	42.0	4.5	18.0	1.5
		D	53.0	75.0	20.0	8.0	52.0	21.0	41.0	3.5	18.0	1.5
		E	53.0	75.0	20.0	10.0	52.0	21.0	40.0	2.5	18.0	1.5
		G	53.0	75.0	20.0	15.0	52.0	21.0	37.5	-	18.0	1.5

Dimensions in mm
AG = actuator size

1) **Connection type**
Code 0: Spigot DIN

Spigot with bypass code 17

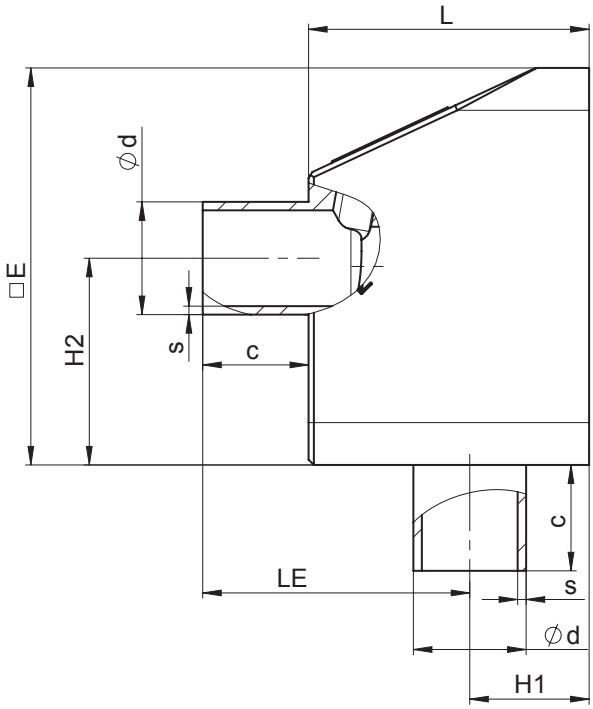

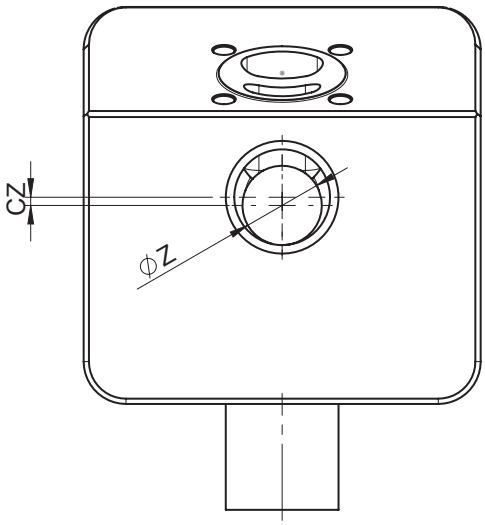

AG	DN	Connection type code 17 [1]										
		Seat size (code)	L	□E	c	Øz	LE	H1	H2	cz	Ød	s
2	8	A	53.0	75.0	20.0	2.0	55.5	17.5	40.5	3.0	10.0	1.0
		B	53.0	75.0	20.0	4.0	55.5	17.5	39.5	2.0	10.0	1.0
		C	53.0	75.0	20.0	6.0	55.5	17.5	38.5	1.0	10.0	1.0
	10	A	53.0	75.0	20.0	2.0	54.5	18.5	41.5	4.0	13.0	1.5
		B	53.0	75.0	20.0	4.0	54.5	18.5	40.5	3.0	13.0	1.5
		C	53.0	75.0	20.0	6.0	54.5	18.5	39.5	2.0	13.0	1.5
		D	53.0	75.0	20.0	8.0	54.5	18.5	38.5	1.0	13.0	1.5
	15	A	53.0	75.0	20.0	2.0	51.5	21.5	44.5	7.0	19.0	1.5
		B	53.0	75.0	20.0	4.0	51.5	21.5	43.5	6.0	19.0	1.5
		C	53.0	75.0	20.0	6.0	51.5	21.5	42.5	5.0	19.0	1.5
		D	53.0	75.0	20.0	8.0	51.5	21.5	41.5	4.0	19.0	1.5
		E	53.0	75.0	20.0	10.0	51.5	21.5	40.5	3.0	19.0	1.5
		G	53.0	75.0	20.0	15.0	51.5	21.5	38.0	0.5	19.0	1.5

Dimensions in mm
AG = actuator size

1) **Connection type**
Code 17: Spigot EN 10357 series A/DIN 11866 series A formerly DIN 11850 series 2

Spigot with bypass code 59

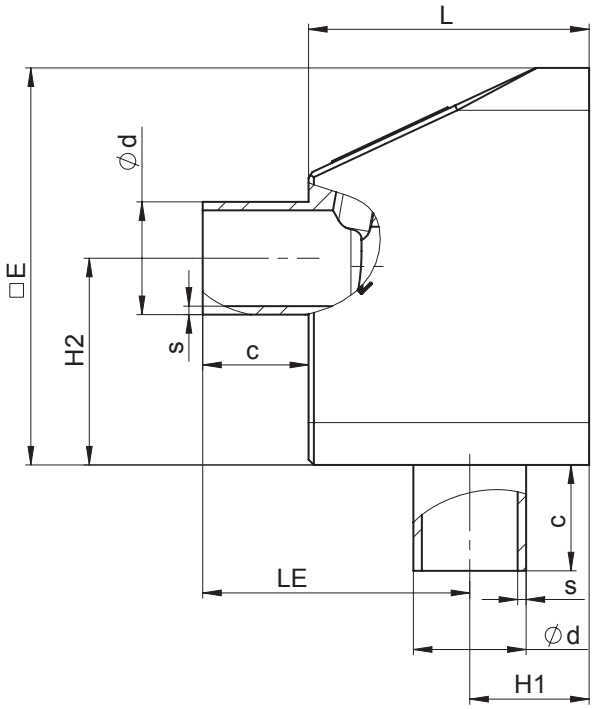

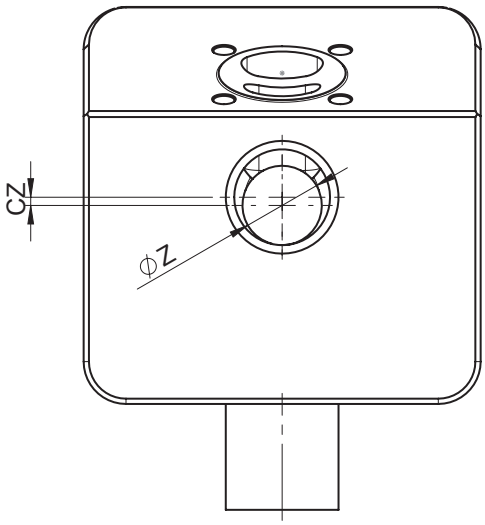

AG	DN	Connection type code 59 [1]										
		Seat size (code)	L	□E	c	Øz	LE	H1	H2	cz	Ød	s
2	15	A	53.0	75.0	20.0	2.0	54.8	18.2	41.20	3.70	12.70	1.65
		B	53.0	75.0	20.0	4.0	54.8	18.2	40.20	2.70	12.70	1.65
		C	53.0	75.0	20.0	6.0	54.8	18.2	39.20	1.70	12.70	1.65
		D	53.0	75.0	20.0	8.0	54.8	18.2	38.20	0.70	12.70	1.65
	20	A	53.0	75.0	20.0	2.0	51.6	21.4	44.38	3.70	12.70	1.65
		B	53.0	75.0	20.0	4.0	51.6	21.4	43.38	2.70	12.70	1.65
		C	53.0	75.0	20.0	6.0	51.6	21.4	42.38	1.70	12.70	1.65
		D	53.0	75.0	20.0	8.0	51.6	21.4	41.38	0.70	12.70	1.65
		E	53.0	75.0	20.0	10.0	51.6	21.4	40.38	2.88	19.05	1.65
		G	53.0	75.0	20.0	15.0	51.6	21.4	37.88	0.38	19.05	1.65

Dimensions in mm
AG = actuator size

1) **Connection type**
Code 59: Spigot ASME BPE/DIN EN 10357 series C (from 2022 edition)/DIN 11866 series C

Spigot with bypass code 60

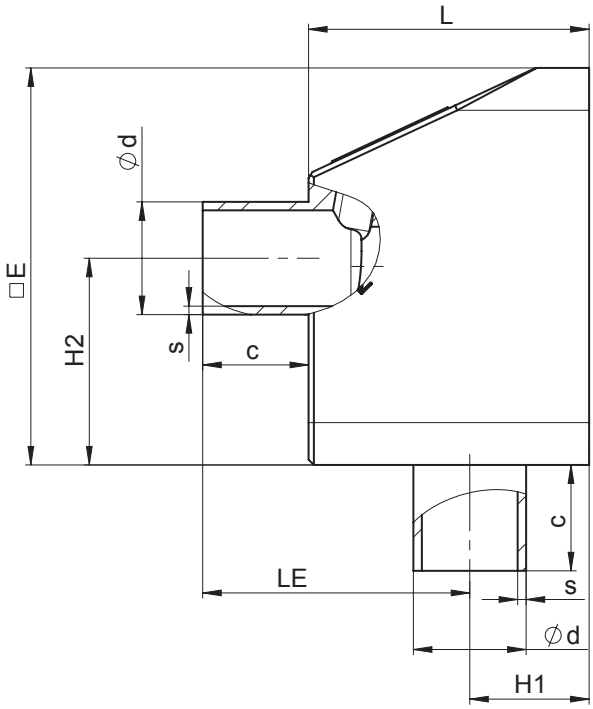

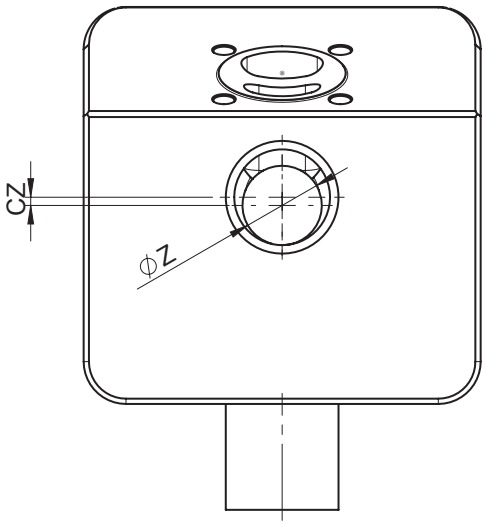

AG	DN	Connection type code 60 [1]										
		Seat size (code)	L	□E	c	Øz	LE	H1	H2	cz	Ød	s
2	8	A	53.0	75.0	20.0	2.0	54.3	18.7	41.65	4.15	13.5	1.6
		B	53.0	75.0	20.0	4.0	54.3	18.7	40.65	3.15	13.5	1.6
		C	53.0	75.0	20.0	6.0	54.3	18.7	39.65	2.15	13.5	1.6
	10	A	53.0	75.0	20.0	2.0	52.5	20.7	43.50	6.00	17.2	1.6
		B	53.0	75.0	20.0	4.0	52.5	20.7	42.50	5.00	17.2	1.6
		C	53.0	75.0	20.0	6.0	52.5	20.5	41.50	4.00	17.2	1.6
		D	53.0	75.0	20.0	8.0	52.5	20.5	40.50	3.00	17.2	1.6
	15	A	53.0	75.0	20.0	2.0	50.4	22.6	45.55	8.05	21.3	1.6
		B	53.0	75.0	20.0	4.0	50.4	22.6	44.55	7.05	21.3	1.6
		C	53.0	75.0	20.0	6.0	50.4	22.6	43.55	6.05	21.3	1.6
		D	53.0	75.0	20.0	8.0	50.4	22.6	42.55	5.05	21.3	1.6
		E	53.0	75.0	20.0	10.0	50.4	22.6	41.55	4.05	21.3	1.6
		G	53.0	75.0	20.0	15.0	50.4	22.6	39.05	1.55	21.3	1.6

Dimensions in mm
AG = actuator size

1) **Connection type**
Code 60: Spigot ISO 1127/DIN EN 10357 series C (2014 edition)/DIN 11866 series B

Clamp without bypass code 82

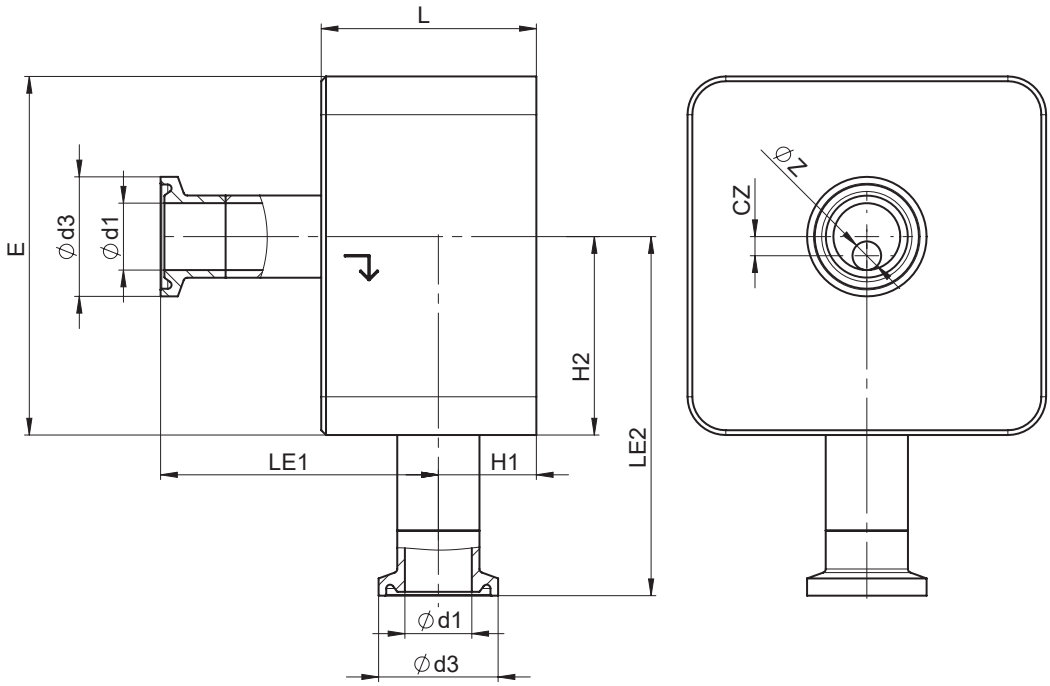

AG	DN	Connection type code 82 [1]										
		Seat size (code)	L	□E	Øz	LE1	LE2	H1	H2	cz	Ød1	Ød3
2	8	A	45.0	75.0	2.0	59.3	74.65	18.7	41.65	4.15	10.3	25.4
		B	45.0	75.0	4.0	59.3	73.65	18.7	40.65	3.15	10.3	25.4
		C	45.0	75.0	6.0	59.3	72.65	18.7	39.65	2.15	10.3	25.4
	10	A	45.0	75.0	2.0	57.5	76.50	20.5	43.50	6.00	14.0	25.4
		B	45.0	75.0	4.0	57.5	75.50	20.5	42.50	5.00	14.0	25.4
		C	45.0	75.0	6.0	57.5	74.50	20.5	41.50	4.00	14.0	25.4
		D	45.0	75.0	8.0	57.5	73.50	20.5	40.50	3.00	14.0	25.4
	15	A	45.0	75.0	2.0	55.4	78.55	22.6	45.55	8.05	18.1	50.5
		B	45.0	75.0	4.0	55.4	77.55	22.6	44.55	7.05	18.1	50.5
		C	45.0	75.0	6.0	55.4	76.55	22.6	43.55	6.05	18.1	50.5
		D	45.0	75.0	8.0	55.4	75.55	22.6	42.55	5.05	18.1	50.5
		E	45.0	75.0	10.0	55.4	74.55	22.6	41.55	4.05	18.1	50.5
		G	45.0	75.0	15.0	55.4	72.05	22.6	39.05	1.55	18.1	50.5
3	20	H	55.0	95.0	20.0	66.0	87.40	27.0	49.40	1.90	19.0	50.5
	25	H	55.0	95.0	20.0	62.6	90.40	30.4	52.40	4.90	25.0	50.5
		J	55.0	95.0	25.0	62.6	87.90	30.4	49.90	2.40	25.0	50.5

Dimensions in mm
AG = actuator size

1) **Connection type**
Code 82: Clamp DIN 32676 series B

Clamp without bypass code 82

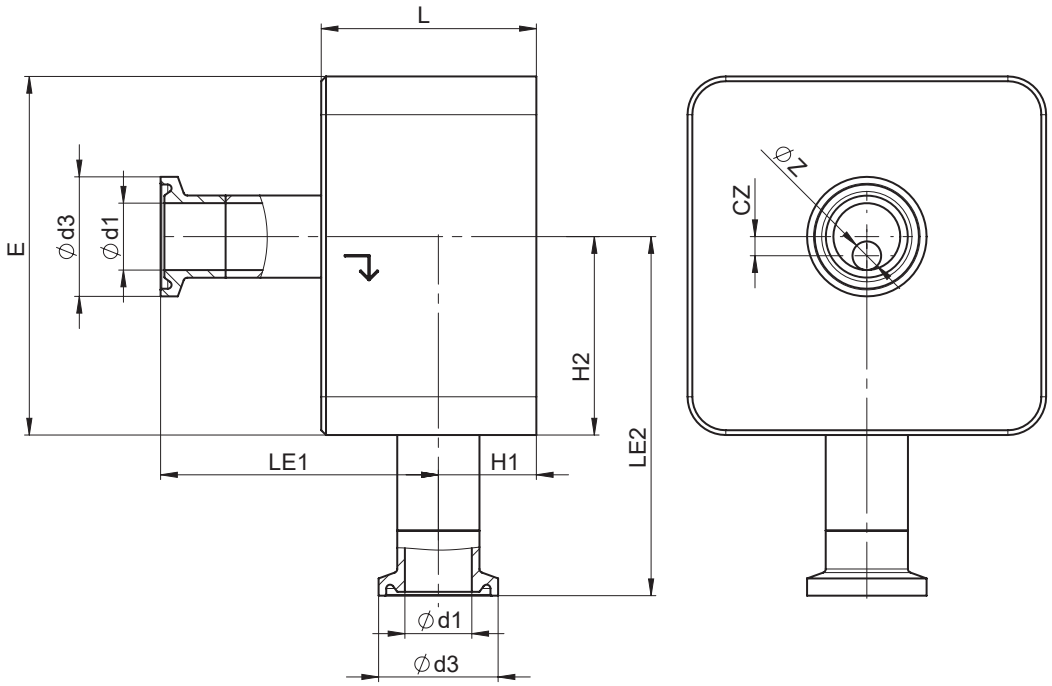

AG	DN	Connection type code 82 [1]										
		Seat size (code)	L	□E	Øz	LE1	LE2	H1	H2	cz	Ød1	Ød3
4	**32**	**K**	73.0	112.0	32.0	78.8	90.8	32.8	52.8	3.2	38.4	64.0
	40	**K**	73.0	112.0	32.0	75.2	87.85	35.8	49.85	6.15	44.3	64.0
		M	73.0	112.0	38.0	75.2	90.85	35.8	52.85	3.15	44.3	64.0
5	**50**	**N**	84.0	140.0	50.0	85.3	136.15	41.7	93.15	3.15	56.3	77.5

Dimensions in mm
AG = actuator size

1) **Connection type**
Code 82: Clamp DIN 32676 series B

Clamp without bypass code 86

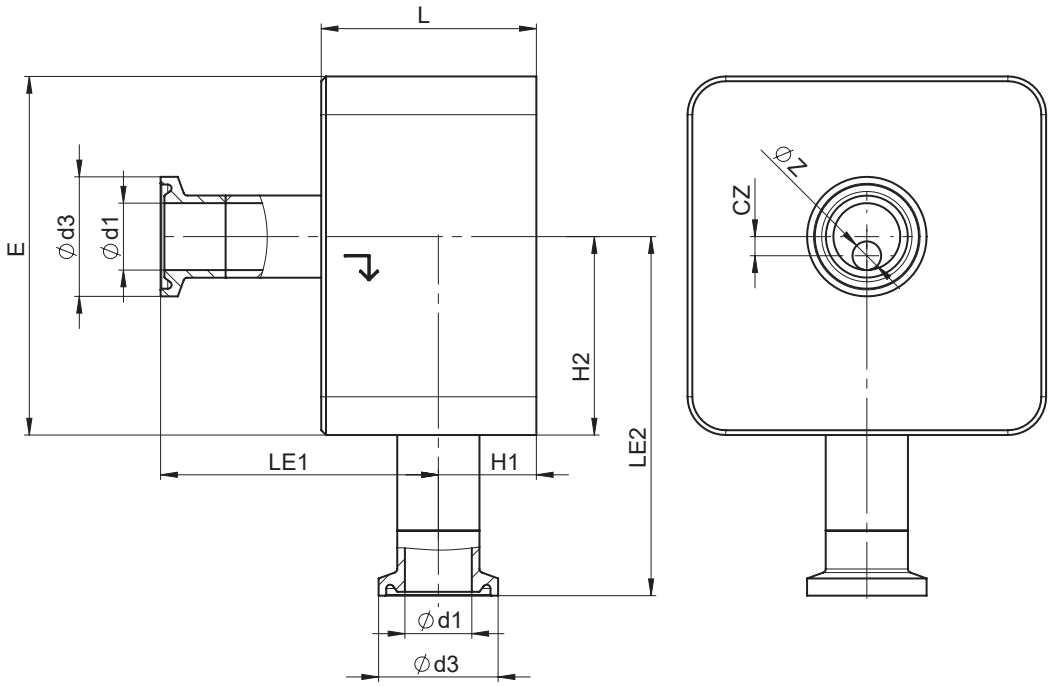

AG	DN	Connection type code 86 [1]										
		Seat size (code)	L	□E	Øz	LE1	LE2	H1	H2	cz	Ød1	Ød3
2	8	A	45.0	75.0	2.0	60.5	73.5	17.5	40.5	3.0	8.0	25.0
		B	45.0	75.0	4.0	60.5	72.5	17.5	39.5	2.0	8.0	25.0
		C	45.0	75.0	6.0	60.5	71.5	17.5	38.5	1.0	8.0	25.0
	10	A	45.0	75.0	2.0	59.5	74.5	18.5	41.5	4.0	10.0	34.0
		B	45.0	75.0	4.0	59.5	73.5	18.5	40.5	3.0	10.0	34.0
		C	45.0	75.0	6.0	59.5	72.5	18.5	39.5	2.0	10.0	34.0
		D	45.0	75.0	8.0	59.5	71.5	18.5	38.5	1.0	10.0	34.0
	15	A	45.0	75.0	2.0	56.5	77.5	21.5	44.5	7.0	16.0	34.0
		B	45.0	75.0	4.0	56.5	76.5	21.5	43.5	6.0	16.0	34.0
		C	45.0	75.0	6.0	56.5	75.5	21.5	42.5	5.0	16.0	34.0
		D	45.0	75.0	8.0	56.5	74.5	21.5	41.5	4.0	16.0	34.0
		E	45.0	75.0	10.0	56.5	73.5	21.5	40.5	3.0	16.0	34.0
		G	45.0	75.0	15.0	56.5	71.0	21.5	38.0	0.5	16.0	34.0
3	20	H	55.0	95.0	20.0	69.5	85.5	23.0	47.5	0.0	20.0	34.0
	25	H	55.0	95.0	20.0	65.0	88.0	28.1	50.0	2.5	26.0	50.5
		J	55.0	95.0	25.0	65.0	88.5	28.1	47.5	0.0	26.0	50.5

Dimensions in mm
AG = actuator size

1) **Connection type**
Code 86: Clamp DIN 32676 series A

Clamp without bypass code 86

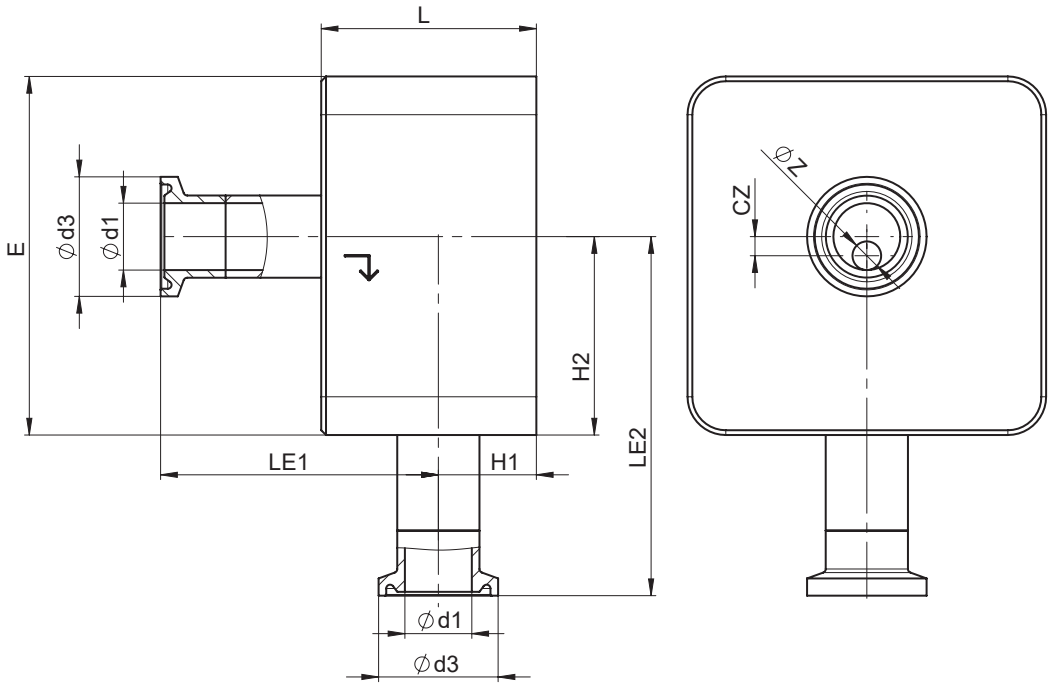

AG	DN	Connection type code 86 [1]										
		Seat size (code)	L	□E	Øz	LE1	LE2	H1	H2	cz	Ød1	Ød3
4	**32**	**K**	73.0	112.0	32.0	80.0	92.5	31.0	54.5	1.5	32.0	50.5
	40	**K**	73.0	112.0	32.0	78.4	91.0	32.6	53.0	3.0	38.0	50.5
		M	73.0	112.0	38.0	78.4	94.0	32.6	56.0	0.0	38.0	50.5
5	**50**	**N**	84.0	140.0	50.0	88.4	133.0	38.6	90.0	0.0	50.0	64.0

Dimensions in mm
AG = actuator size

1) **Connection type**
Code 86: Clamp DIN 32676 series A

Clamp without bypass code 88

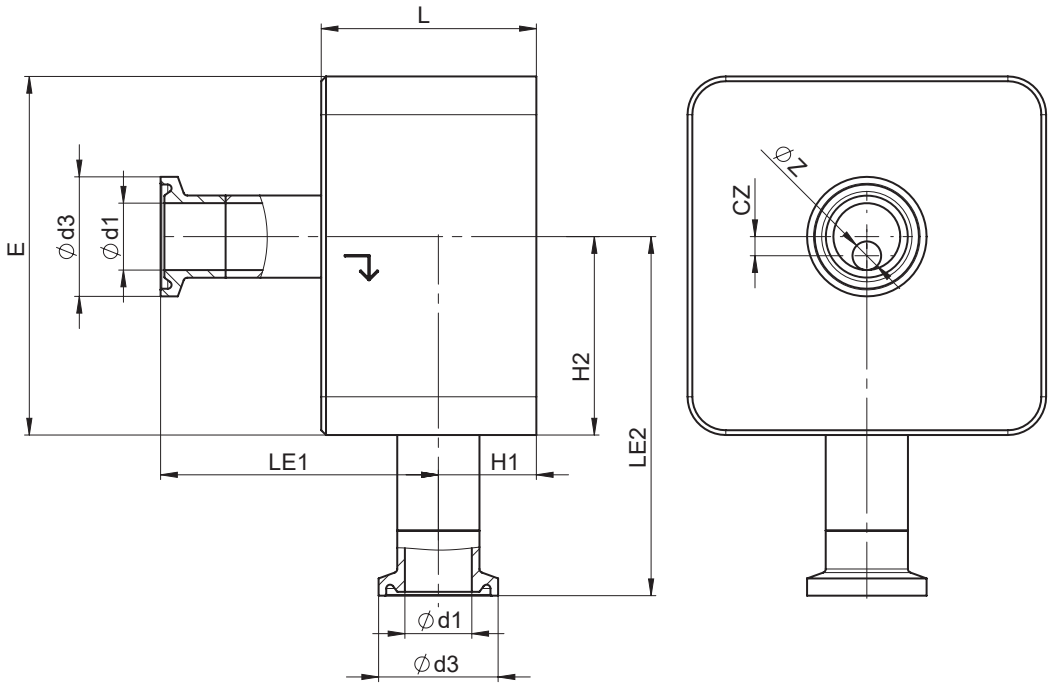

AG	DN	Connection type code 88 [1]										
		Seat size (code)	L	□E	Øz	LE1	LE2	H1	H2	cz	Ød1	Ød3
2	15	A	45.0	75.0	2.0	59.8	74.20	18.2	41.20	3.70	9.40	25.0
		B	45.0	75.0	4.0	59.8	73.20	18.2	40.20	2.70	9.40	25.0
		C	45.0	75.0	6.0	59.8	72.20	18.2	39.20	1.70	9.40	25.0
		D	45.0	75.0	8.0	59.8	71.20	18.2	38.20	0.70	9.40	25.0
	20	A	45.0	75.0	2.0	56.5	77.38	21.4	44.38	6.88	15.75	25.0
		B	45.0	75.0	4.0	56.5	76.38	21.4	43.38	5.88	15.75	25.0
		C	45.0	75.0	6.0	56.5	75.38	21.4	42.38	4.88	15.75	25.0
		D	45.0	75.0	8.0	56.5	74.38	21.4	41.38	3.88	15.75	25.0
		E	45.0	75.0	10.0	56.5	73.38	21.4	40.38	2.88	15.75	25.0
		G	45.0	75.0	15.0	56.5	70.88	21.4	37.88	0.38	15.75	25.0
3	25	H	55.0	95.0	20.0	66.8	87.60	26.3	48.60	1.10	22.10	50.5

Dimensions in mm
AG = actuator size

1) **Connection type**
Code 88: Clamp ASME BPE, for pipe ASME BPE

Clamp without bypass code 88

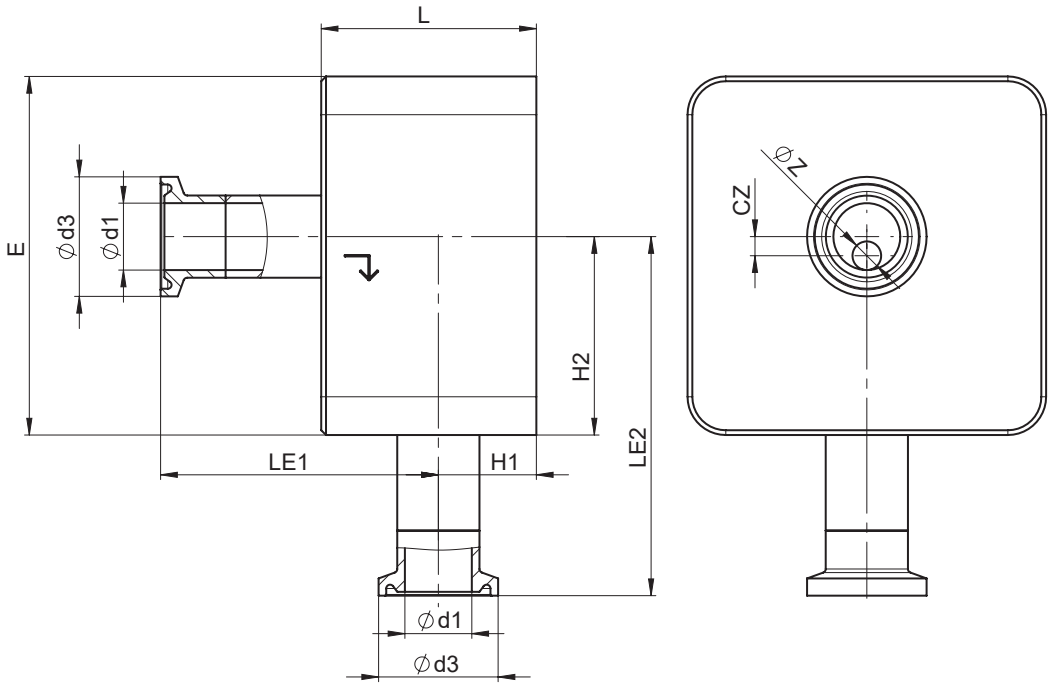

AG	DN	Connection type code 88 [1]										
		Seat size (code)	L	□E	Øz	LE1	LE2	H1	H2	cz	Ød1	Ød3
4	**40**	**K**	73.0	112.0	32.0	80.1	92.6	31.0	54.6	1.4	34.8	50.5
	50	**K**	73.0	112.0	32.0	72.7	86.25	37.4	48.25	7.75	47.5	64.0
		M	73.0	112.0	38.0	72.7	89.25	37.4	51.25	4.75	47.5	64.0
5	**65**	**N**	84.0	140.0	50.0	83.1	127.6	43.7	84.9	5.1	60.2	77.5

Dimensions in mm
AG = actuator size

1) **Connection type**
Code 88: Clamp ASME BPE, for pipe ASME BPE

Clamp with bypass code 82

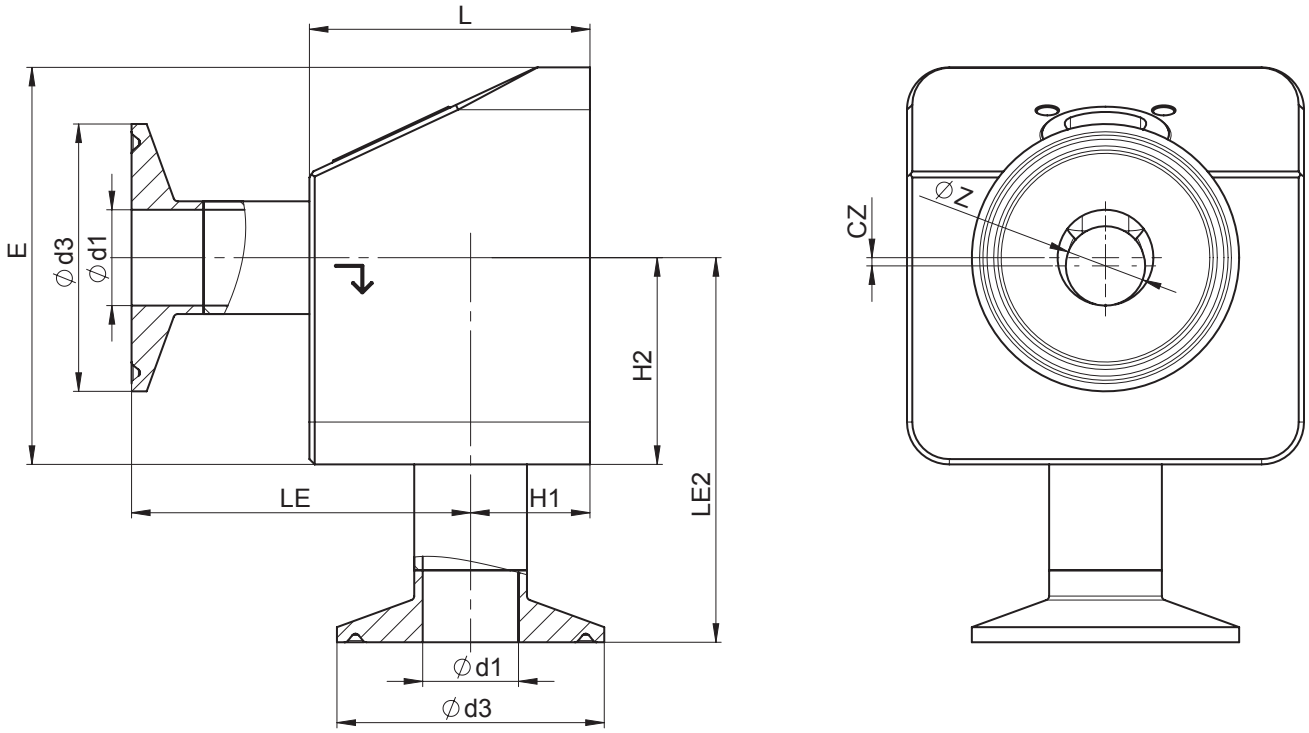

AG	DN	Connection type code 82 [1]										
		Seat size (code)	L	□E	Øz	LE1	LE2	H1	H2	cz	Ød1	Ød3
2	8	A	53.0	75.0	2.0	67.3	74.65	18.7	41.65	4.15	10.3	25.4
		B	53.0	75.0	4.0	67.3	73.65	18.7	40.65	3.15	10.3	25.4
		C	53.0	75.0	6.0	67.3	72.65	18.7	39.65	2.15	10.3	25.4
	10	A	53.0	75.0	2.0	65.5	76.50	20.5	43.50	6.00	14.0	25.4
		B	53.0	75.0	4.0	65.5	75.50	20.5	42.50	5.00	14.0	25.4
		C	53.0	75.0	6.0	65.5	74.50	20.5	41.5	4.00	14.0	25.4
		D	53.0	75.0	8.0	65.5	73.50	20.5	40.5	3.00	14.0	25.4
	15	A	53.0	75.0	2.0	63.4	78.55	22.6	45.55	8.05	18.1	50.5
		B	53.0	75.0	4.0	63.4	77.55	22.6	44.55	7.05	18.1	50.5
		C	53.0	75.0	6.0	63.4	76.55	22.6	43.55	6.05	18.1	50.5
		D	53.0	75.0	8.0	63.4	75.55	22.6	42.55	5.05	18.1	50.5
		E	53.0	75.0	10.0	63.4	74.55	22.6	41.55	4.05	18.1	50.5
		G	53.0	75.0	15.0	63.4	72.05	22.6	39.05	1.55	18.1	50.5

Dimensions in mm
AG = actuator size

1) **Connection type**
Code 82: Clamp DIN 32676 series B

Clamp with bypass code 86

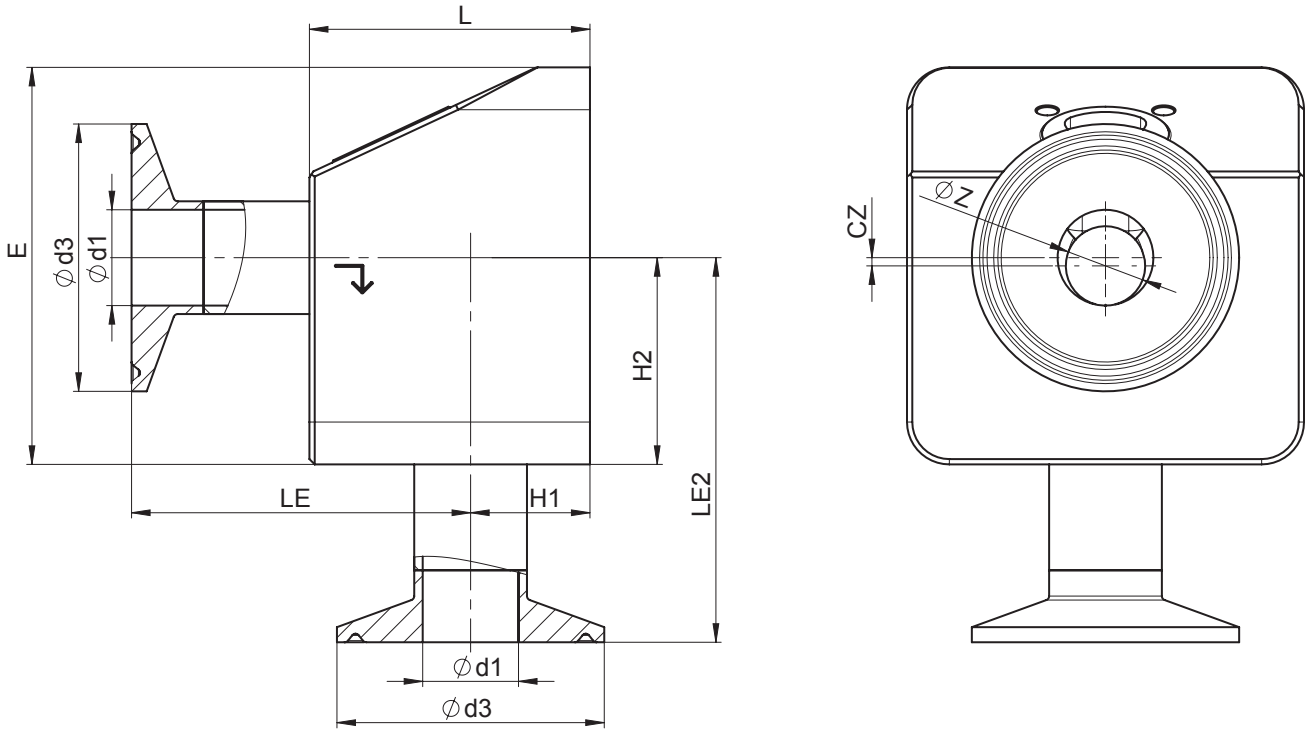

AG	DN	Connection type code 86 [1]										
		Seat size (code)	L	□E	Øz	LE1	LE2	H1	H2	cz	Ød1	Ød3
2	8	A	53.0	75.0	2.0	68.5	73.5	17.5	40.5	3.0	8.0	25.0
		B	53.0	75.0	4.0	68.5	72.5	17.5	39.5	2.0	8.0	25.0
		C	53.0	75.0	6.0	68.5	71.5	17.5	38.5	1.0	8.0	25.0
	10	A	53.0	75.0	2.0	67.5	74.5	18.5	41.5	4.0	10.0	34.0
		B	53.0	75.0	4.0	67.5	73.5	18.5	40.5	3.0	10.0	34.0
		C	53.0	75.0	6.0	67.5	72.5	18.5	39.5	2.0	10.0	34.0
		D	53.0	75.0	8.0	67.5	71.5	18.5	38.5	1.0	10.0	34.0
	15	A	53.0	75.0	2.0	64.5	77.5	21.5	44.5	7.0	16.0	34.0
		B	53.0	75.0	4.0	64.5	76.5	21.5	43.5	6.0	16.0	34.0
		C	53.0	75.0	6.0	64.5	75.5	21.5	42.5	5.0	16.0	34.0
		D	53.0	75.0	8.0	64.5	74.5	21.5	41.5	4.0	16.0	34.0
		E	53.0	75.0	10.0	64.5	73.5	21.5	40.5	3.0	16.0	34.0
		G	53.0	75.0	15.0	64.5	71.0	21.5	38.0	0.5	16.0	34.0

Dimensions in mm
AG = actuator size

1) **Connection type**
Code 86: Clamp DIN 32676 series A

Clamp with bypass code 88

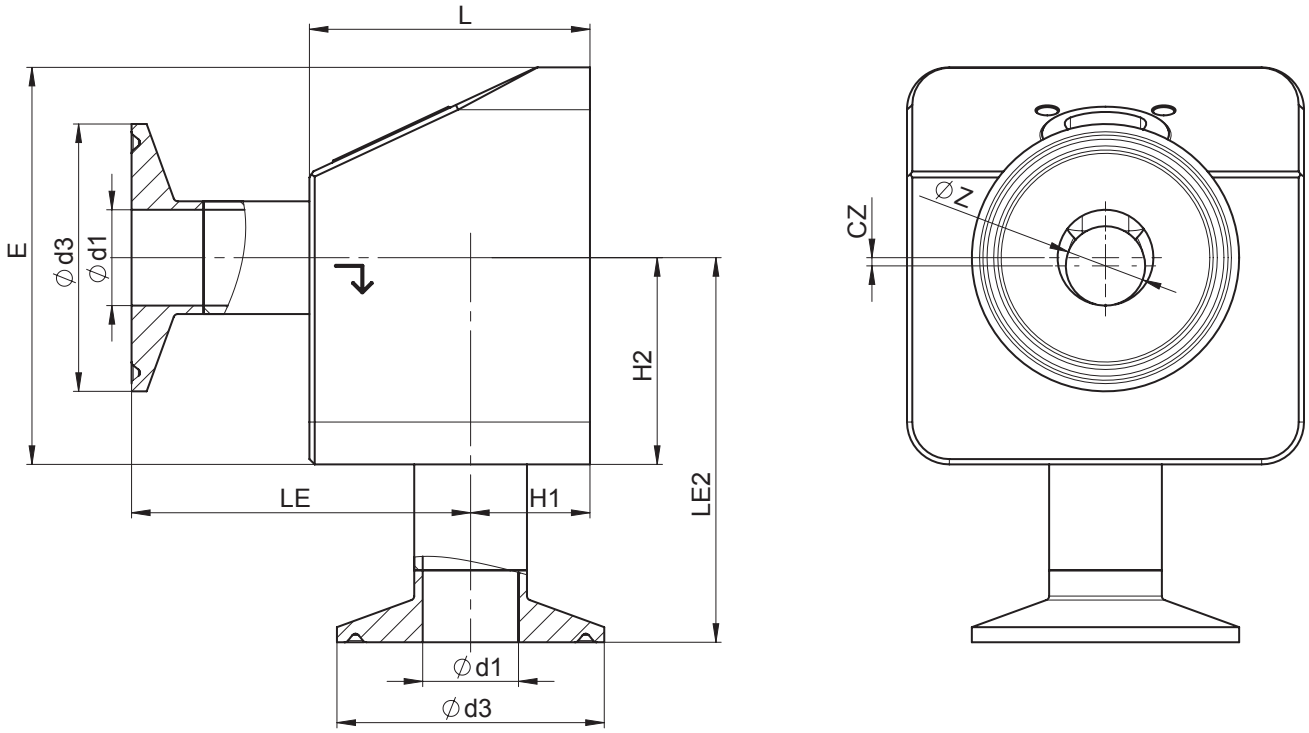

AG	DN	Connection type code 88 [1]										
		Seat size (code)	L	□E	Øz	LE1	LE2	H1	H2	cz	Ød1	Ød3
2	15	A	53.0	75.0	2.0	67.8	74.20	18.2	41.20	3.70	9.40	25.0
		B	53.0	75.0	4.0	67.8	73.20	18.2	40.20	2.70	9.40	25.0
		C	53.0	75.0	6.0	67.8	72.20	18.2	39.20	1.70	9.40	25.0
		D	53.0	75.0	8.0	67.8	71.20	18.2	38.20	0.70	9.40	25.0
	20	A	53.0	75.0	2.0	64.6	77.38	21.4	44.38	6.88	15.75	25.0
		B	53.0	75.0	4.0	64.6	76.38	21.4	43.38	5.88	15.75	25.0
		C	53.0	75.0	6.0	64.6	75.38	21.4	42.38	4.88	15.75	25.0
		D	53.0	75.0	8.0	64.6	74.38	21.4	41.38	3.88	15.75	25.0
		E	53.0	75.0	10.0	64.6	73.38	21.4	40.38	2.88	15.75	25.0
		G	53.0	75.0	15.0	64.6	70.88	21.4	37.88	0.38	15.75	25.0

Dimensions in mm
AG = actuator size

1) **Connection type**
Code 88: Clamp ASME BPE, for pipe ASME BPE

Operation

⚠ CAUTION

Risk of crushing!

Risk of severe injury. The guide piece is accessible when the housing cover is removed, posing a risk of crushing by the guide piece when the actuator moves.

a) Operation, maintenance, inspection and assembly must only be performed by qualified and trained personnel.

⚠ CAUTION

Risk of crushing!

Risk of severe injury. Contact with the threaded spindle is possible on the base of the actuator, posing a risk of crushing by the threaded spindle when the actuator moves.

a) Operation, maintenance, inspection and assembly must only be performed by qualified and trained personnel.

Accessories

GEMÜ 1218

Connector

GEMÜ 1218 is a connector (cable socket/cable plug), 7-pin. Straight or 90° angled plug type.

GEMÜ 1218 Binder connector			
Connection X1 – supply voltage, relay outputs			
Binder plug	468/eSy series mating connector	Terminal compartment/ screws, 7-pin	88220649 [1)]
		Terminal compartment/ screws, 7-pin, 90°	88377714
		Terminal compartment/ screws, 7-pin, 90°, fitted with a 2 metre cable set	88770522

1) provided in the scope of delivery

GEMÜ 1219

Cable socket / cable plug M12

The GEMÜ 1219 is a connector (cable socket / cable plug) M12, 5-pin. Straight and/or 90° angled plug type. Defined cable length or with threaded connection without cable. Various materials available for the threaded ring.

GEMÜ 1219 Ethernet/M12 cable			
Connection X2 - network connection			
M12 cable plug, straight, 4-pin	Fitted with a 1 metre cable set	Ethernet RJ45	88450499
	Fitted with a 4 metre cable set		88450500
	Fitted with a 15 metre cable set		88450502
M12 cable plug, angled, 4-pin	Fitted with a 4 metre cable set		88715615
Connection X3 – analogue/digital inputs and outputs			
M12 cable socket, straight, 8-pin	Without cable dia. 6–8 mm		88304829 [1)]
	Fitted with a 5 metre cable set, PUR black cable		88758155
M12 cable socket, angled, 8-pin	Without cable dia. 6–8 mm		88422823
	Fitted with a 5 metre cable set, PUR black cable		88374574
Connection X4 – actual value supply, actual value input			
M12 cable plug, straight, 5-pin	Without cable PG7	Nickel-plated brass	88208641
	Fitted with a 2 metre cable set, PUR black cable	5 x 0.34, nickel-plated brass	88208643
	Fitted with a 5 metre cable set, PUR black cable	5 x 0.34, nickel-plated brass	88208644
M12 cable plug, angled, 5-pin	Without cable dia. 6–8 mm	Nickel-plated brass	88208645
	Fitted with a 2 metre cable set, PUR black cable	5 x 0.34, nickel-plated brass	88208649
	Fitted with a 5 metre cable set, PUR black cable	5 x 0.34, nickel-plated brass	88208650

1) provided in the scope of delivery

GEMÜ 1571

Emergency power supply module

The GEMÜ 1571 capacitive emergency power supply module is suitable for valves with motorized actuators such as GEMÜ eSyStep and eSyDrive as well as the GEMÜ C53 iComLine control valve. In the event of a power failure, the product provides an uninterrupted power supply so that the valve can be moved to the safety position. The emergency power supply module is available individually or with an expansion module and can supply several valves. The input and output voltage is 24 V.

GEMÜ 1571 emergency power supply module			
Input voltage	Output voltage	Capacity	Item number
24 V	24 V	1700 Ws	88660398
24 V	24 V	13200 Ws	88751062

GEMÜ 1573

Switching power supply unit

The GEMÜ 1573 switching power supply unit converts unstable input voltages from 100 to 240 V AC into a continuous DC voltage. It can be used as an accessory for valves with motorized actuators e. g. GEMÜ eSyLite, eSyStep und eSyDrive and for additional devices with a 24 V DC power supply. Different power levels, output currents and a 48 V DC version for servoDrive actuators are available.

GEMÜ 1573 switching power supply unit			
Input voltage	Output voltage	Output current	Item number
100 - 240 V AC	24 V DC	5 A	88660400
		10 A	88660401

Subject to alteration | 10.2026 | 88722900

GEMÜ Gebr. Müller Apparatebau GmbH & Co. KG
Gert-Müller-Platz 1, 74635 Kupferzell, Germany
Phone +49 (0) 7940 1230 · info@gemue.de
www.gemu-group.com