# GEMÜ R470 Tugela

## Double-eccentric butterfly valve with bare shaft

## Features

- High-performance butterfly valve with double-eccentric construction in order to separate the disc directly from the seat (gasket), thereby reducing friction and extending the service life
- Continuous shaft with temperature resistant graphite bearing and PTFE gland packing for readjustment in operation for minimized leakage, even at low pressures
- Antistatic fixture for ATEX area
- Bubble tight sealing, in accordance with EN 12266-1/P12, leak rate A

## Description

The GEMÜ R470 Tugela double-eccentric metal butterfly valve has a bare shaft with a top flange in accordance with EN ISO 5211. The butterfly valve is available in nominal sizes DN 50 to 600 and in standardized installation lengths API 609 category A (DIN 3202 K1).

## Technical specifications

- **Media temperature :** -40 to 230 °C
- **Ambient temperature:** -40 to 70 °C
- **Operating pressure :** 0 to 40 bar
- **Nominal sizes:** DN 50 to 600
- **Body configurations:** Wafer
- **Connection standards:** ASME I ISO
- **Body materials:** 1.0619 (WCB), cast steel material with CDP coating I 1.4408 (CF8M), investment casting material
- **Liner materials:** PTFE
- **Disc materials:** 1.4408
- **Conformities:** ATEX I EAC I FDA I FMEDA I TA Luft (German Clean Air Act)

Technical data depends on the respective configuration

further information
webcode: GW-R470

# Product line

| | | | | |
|---|---|---|---|---|
| | **GEMÜ R470 Tugela** | **GEMÜ R471 Tugela** | **GEMÜ R477 Tugela** | **GEMÜ R478 Tugela** |
| **Operation** | | | | |
| With bare shaft | ● | - | - | - |
| Manual | - | - | ● | - |
| Pneumatic | - | ● | - | - |
| Motorized | - | - | - | ● |
| **Nominal sizes** | DN 50 to 600 | DN 50 to 600 | DN 50 to 600 | DN 50 to 600 |
| **Media temperature** | -40 to 230 °C | -40 to 230 °C | -40 to 230 °C | -40 to 230 °C |
| **Operating pressure** | 0 to 40 bar | 0 to 40 bar | 0 to 40 bar | 0 to 40 bar |
| **Connection types** | | | | |
| Flange (lug) | ● | ● | ● | ● |
| Flange (U section) | ● | ● | ● | ● |
| Flange (wafer) | ● | ● | ● | ● |
| **Conformities** | | | | |
| ATEX | ● | ● | ● | ● |
| EAC | ● | ● | ● | ● |
| FDA | ● | ● | ● | ● |
| FMEDA | ● | - | - | - |
| TA Luft (German Clean Air Act) | ● | ● | ● | ● |

# Product description

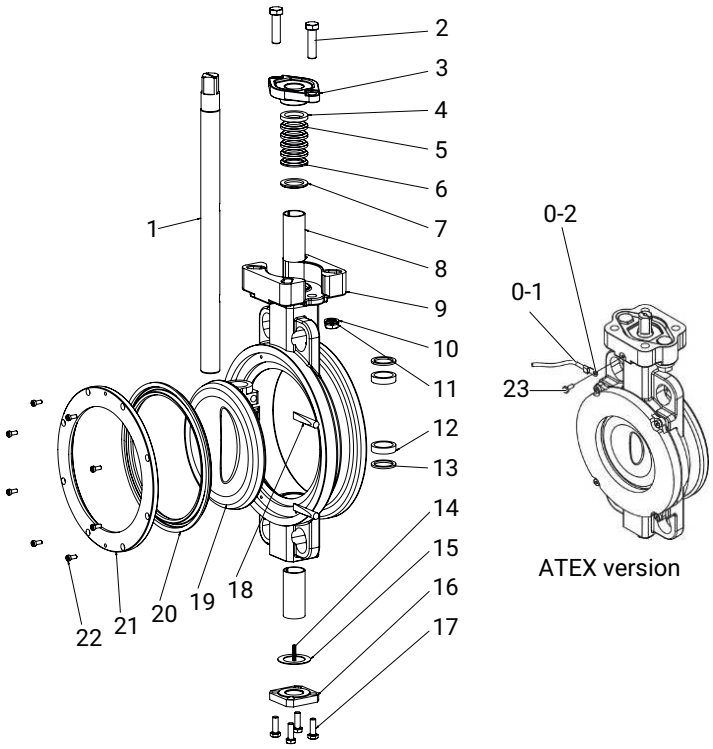


| Item | Designation | Material |
|---|---|---|
| 1 | Shaft | See order code (order data) |
| 2 | Hexagon screw | Stainless steel |
| 3 | Packing washer | 1.4408 |
| 4 | Upper gland packing | PTFE |
| 5 | Middle gland packing | PTFE |
| 6 | Lower gland packing | PTFE |
| 7 | Packing washer | PTFE |
| 8 | Bush | 316/PTFE |
| 9 | Housing | See order code (order data) |
| 10 | Spring washer | Stainless steel |
| 11 | Hexagon nut | Stainless steel |
| 12 | Shaft bearing | PTFE coated steel |
| 13 | Shaft bearing | PTFE coated steel |
| 14 | Static spring | Stainless steel |
| 15 | Sealing washer | Stainless steel |
| 16 | Lower cap | As body |
| 17 | Hexagon screw | Stainless steel |
| 18 | Disc pin | Steel |
| 19 | Disc | See order code (order data) |
| 20* | Seat | See order code (order data) |
| 21 | Seat retainer | |
| 22 | Hexagon screw | Stainless steel |
| 0 | Earthing kit for ATEX version | |
| 0-1 | Stranded wire (ATEX version) | |

| Item | Designation | Material |
|---|---|---|
| 0-2 | Cable lug (ATEX version) | |
| 23 | Hexagon screw | Stainless steel |

* available as spare part

## Additional design features

### Double-eccentric design

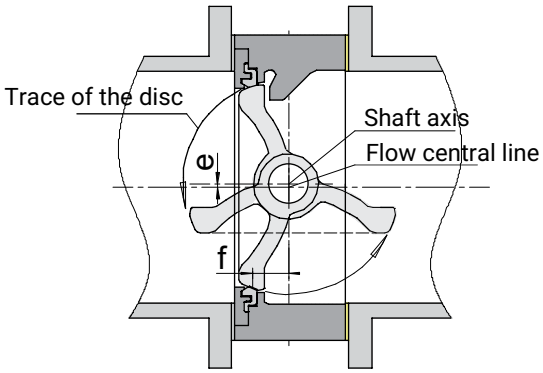


During operation, the disc directly disconnects from the seat, thereby reducing friction between the seat and disc, as well as the torque.

This design is particularly low-wear and this, together with the temperature-resistant carbon bushing, increases the service life.

**Spherical surface**

The disc is designed with a spherical surface for improved mechanical behaviour under pressure and temperature fluctuations.

### Shaft blow-out protection

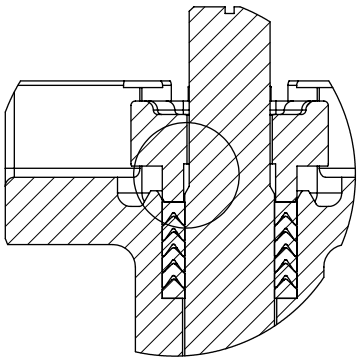

There is a chamfer at the upper end of the shaft which acts as an additional safety measure in case the shaft breaks.

### Flow direction

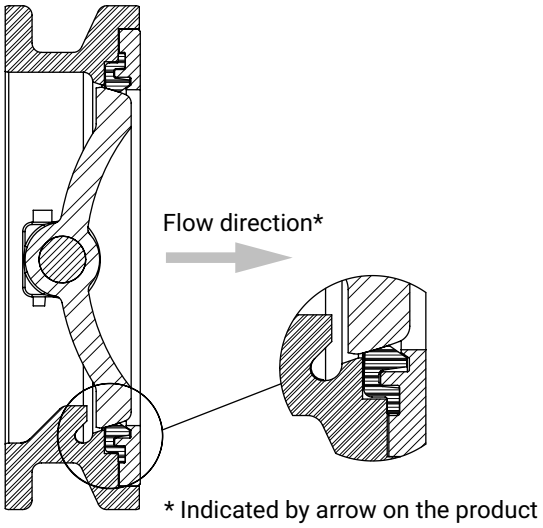


### Seat material

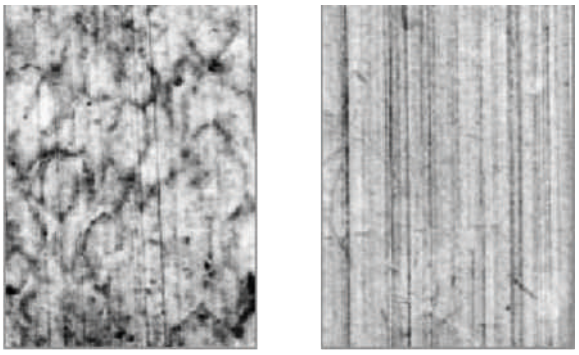

**PTFE** **TFM**

TFM™ is made from conventional PTFE and a 1% proportion of perfluoropropyl vinyl ether (PPVE). While the properties of conventional PTFE (excellent chemical resistance, application in a wide temperature range and resistance to embrittlement or ageing, etc.) are maintained, the PPVE additive leads to a better distribution of the PTFE particles and thus to a higher density of the polymer structure.

This leads to the following additional advantages:

- Significantly better cold flow properties (measured as deformation under load):
  Same cold flow properties as PTFE with 25% glass fibres.
- Reduced gas permeability and increased blocking properties
- The smooth surface results in less abrasion of the shut-off seal and fewer abraded particles in the medium.

# Order data

Other configurations available on request. Please check the availability with GEMÜ before ordering.

## Order codes

| 1 Type | Code |
|---|---|
| Butterfly valve, double-eccentric, bare shaft,<br>long service life,<br>low friction thanks to direct separation of seat/disc,<br>continuous and blow-out proof shaft,<br>with anti-static unit and low-maintenance spindle seal,<br>readjustable | R470 |

| 2 DN | Code |
|---|---|
| DN 50 | 50 |
| DN 65 | 65 |
| DN 80 | 80 |
| DN 100 | 100 |
| DN 125 | 125 |
| DN 150 | 150 |
| DN 200 | 200 |
| DN 250 | 250 |
| DN 300 | 300 |
| DN 350 | 350 |
| DN 400 | 400 |
| DN 450 | 450 |
| DN 500 | 500 |
| DN 600 | 600 |

| 3 Body configuration | Code |
|---|---|
| Flange-mounted design (lug),<br>face-to-face dimension FTF EN 558 series 20 | L |
| Double flange design (U section),<br>face-to-face dimension FTF EN 558, series 20 | U |
| Intermediate flange design (wafer),<br>face-to-face dimension FTF API609 table B, EN 558 series 108, EN 558 series 109 | W |

| 4 Operating pressure | Code |
|---|---|
| 10 bar | 2 |
| 16 bar | 3 |
| 20 bar | 4 |
| 25 bar | 5 |
| 40 bar | 6 |

| 5 Connection type | Code |
|---|---|
| PN 10 / flange EN 1092, face-to-face dimension FTF EN 558 series 108 | 2 |
| PN 16 / flange EN 1092, face-to-face dimension FTF EN 558 series 108 | 3 |
| PN 25 / flange EN 1092, face-to-face dimension FTF EN 558 series 20 | 5 |
| PN 40 / flange EN 1092, face-to-face dimension FTF EN 558 series 109 | 6 |
| ANSI B16.5, Class 150, face-to-face dimension FTF EN 558 series 108 | D |
| ANSI B16.5, Class 300,<br>face-to-face dimension FTF EN 558 series 109 | M |

| 6 Body material | Code |
|---|---|
| 1.4408 / ASTM A351 / CF8M | 4 |
| 1.0619 / ASTM A216 WCB, CDP coated 20 µm,<br>for non-European countries,<br>1.0619 is not a material for pressure equipment according to 2014/68/EU | 5 |

| 7 Disc material | Code |
|---|---|
| 1.4408 / ASTM A351 CF8M | A |

| 8 Shaft material | Code |
|---|---|
| 1.4542 / ASTM 564 630<br>UNS S17400 | 6 |
| 1.4410 / ASTM A276 S32750 | D |
| **Note:** -40 °C only possible with shaft material 1.4410 (Code D) | |

| 9 Shut-off seal material | Code |
|---|---|
| TFM 1600 (FDA certification) | T |

| 10 Liner fixing | Code |
|---|---|
| Loose liner | L |

| 11 Actuator flange | Code |
|---|---|
| F05, flange type DIN EN ISO 5211 | F05 |
| F07, flange type DIN EN ISO 5211 | F07 |
| F10, flange type DIN EN ISO 5211 | F10 |
| F12, flange type DIN EN ISO 5211 | F12 |
| F14, flange type DIN EN ISO 5211 | F14 |

| 12 Actuator flange | Code |
|---|---|
| F07, flange type DIN EN ISO 5211 | 07 |
| F10, flange type DIN EN ISO 5211 | 10 |
| F12, flange type DIN EN ISO 5211 | 12 |
| F14, flange type DIN EN ISO 5211 | 14 |
| F16, flange type DIN EN ISO 5211 | 16 |

| 13 Shaft connection and size | Code |
|---|---|
| Square, diagonal, WAF 11 mm | D11 |
| Square, diagonal, WAF 14 mm | D14 |
| Square, diagonal, WAF 17 mm | D17 |
| Square, diagonal, WAF 22 mm | D22 |
| Square, diagonal, WAF 27 mm | D27 |
| Square, diagonal, WAF 36 mm | D36 |

| 14 Special version | Code |
|---|---|
| Without | |
| ATEX certification | X |

| 15 CONEXO | Code |
|---|---|
| Without | |
| Integrated RFID chip for electronic identification and traceability | C |

## Order example

| Ordering option | Code | Description |
|---|---|---|
| 1 Type | R470 | Butterfly valve, double-eccentric, bare shaft,<br>long service life,<br>low friction thanks to direct separation of seat/disc,<br>continuous and blow-out proof shaft,<br>with anti-static unit and low-maintenance spindle seal,<br>readjustable |
| 2 DN | 300 | DN 300 |
| 3 Body configuration | W | Intermediate flange design (wafer),<br>face-to-face dimension FTF API609 table B, EN 558 series 108, EN 558 series 109 |
| 4 Operating pressure | 4 | 20 bar |
| 5 Connection type | 6 | PN 40 / flange EN 1092, face-to-face dimension FTF EN 558 series 109 |
| 6 Body material | 4 | 1.4408 / ASTM A351 / CF8M |
| 7 Disc material | A | 1.4408 / ASTM A351 CF8M |
| 8 Shaft material | 6 | 1.4542 / ASTM 564 630<br>UNS S17400 |
| 9 Shut-off seal material | T | TFM 1600 (FDA certification) |
| 10 Liner fixing | L | Loose liner |
| 11 Actuator flange | F14 | F14, flange type DIN EN ISO 5211 |
| 12 Actuator flange | 16 | F16, flange type DIN EN ISO 5211 |
| 13 Shaft connection and size | D27 | Square, diagonal, WAF 27 mm |
| 14 Special version | | Without |
| 15 CONEXO | | Without |

# Technical data

## Medium

**Working medium:** Gaseous and liquid media which have no negative impact on the physical and chemical properties of the disc and seat material.

## Temperature

**Media temperature:** -40 — 230 °C

**Ambient temperature:** -40 — 70 °C

**Storage temperature:** -60 — 60 °C

## Pressure

**Operating pressure:** 0 — 40 bar

**Note:** Cannot be used as an end-of-line valve

**Vacuum:** Can be used up to a vacuum of 10 mbar (abs) due to a leak rate at $10^{-3}$ [mbar l / sec]

These values apply to room temperature and air. The values may deviate for other media and other temperatures.

**Pressure/temperature diagram:**

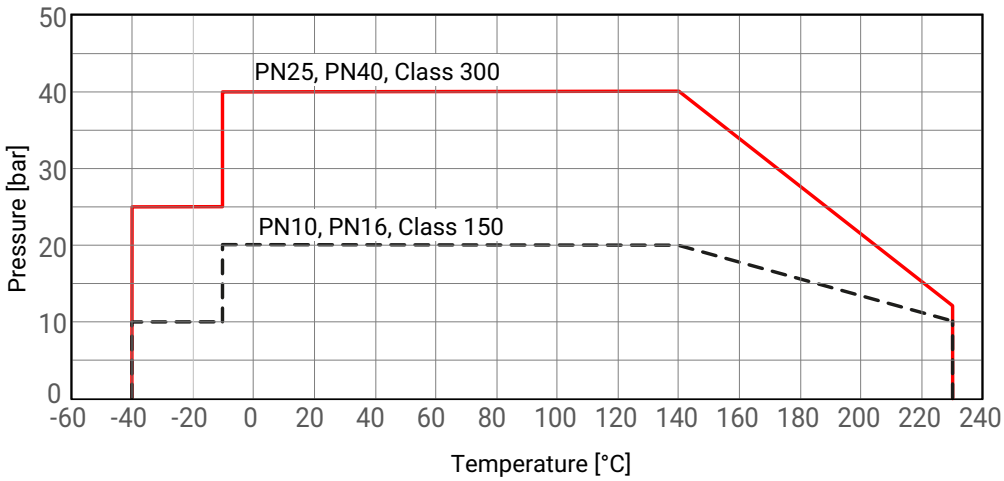

**Cv values:**

| DN | NPS | Body | Kv in m³/h at opening angle in ° | | | | | | |
|---|---|---|---|---|---|---|---|---|---|
| | | CLASS | 90 | 80 | 65 | 50 | 35 | 20 | 0 |
| **50** | **2"** | **CL300** | 24.7 | 25.3 | 27.2 | 21.3 | 9.6 | 0.1 | 0.0 |
| **65** | **2½"** | **CL300** | 59.6 | 69.3 | 74.2 | 50.6 | 24.2 | 2.99 | 0.0 |
| **80** | **3"** | **CL300** | 123.0 | 129.0 | 118.0 | 95.5 | 60.2 | 17.2 | 0.0 |
| **100** | **4"** | **CL300** | 281.0 | 295.0 | 250.0 | 170.0 | 100.0 | 35.9 | 0.0 |
| **125** | **5"** | **CL300** | 423.0 | 449.0 | 393.0 | 276.0 | 168.0 | 52.3 | 0.0 |
| **150** | **6"** | **CL150** | 770.0 | 776.0 | 586.0 | 384.0 | 211.0 | 85.2 | 0.0 |
| | | **CL300** | 696.0 | 705.0 | 543.0 | 363.0 | 200.0 | 78.0 | 0.0 |
| **200** | **8"** | **CL150** | 1480.0 | 1530.0 | 1160.0 | 734.0 | 414.0 | 192.0 | 0.0 |
| | | **CL300** | 1470.0 | 1520.0 | 1150.0 | 734.0 | 419.0 | 195.0 | 0.0 |
| **250** | **10"** | **CL150** | 2400.0 | 2410.0 | 1780.0 | 1120.0 | 597.0 | 271.0 | 0.0 |
| | | **CL300** | 2410.0 | 2340.0 | 1690.0 | 1030.0 | 522.0 | 218.0 | 0.0 |
| **300** | **12"** | **CL150** | 3650.0 | 3600.0 | 2610.0 | 1650.0 | 910.0 | 410.0 | 0.0 |
| | | **CL300** | 3350.0 | 3250.0 | 2350.0 | 1490.0 | 781.0 | 345.0 | 0.0 |
| **350** | **14"** | **CL150** | 3890.0 | 3810.0 | 2960.0 | 2000.0 | 1200.0 | 647.0 | 0.0 |
| | | **CL300** | 3860.0 | 3720.0 | 2780.0 | 1790.0 | 1030.0 | 510.0 | 0.0 |
| **400** | **16"** | **CL150** | 6350.0 | 5960.0 | 4270.0 | 2570.0 | 1420.0 | 720.0 | 0.0 |
| | | **CL300** | 5300.0 | 5140.0 | 3670.0 | 2350.0 | 1330.0 | 643.0 | 0.0 |
| **450** | **18"** | **CL150** | 8080.0 | 7710.0 | 5360.0 | 3290.0 | 1800.0 | 888.0 | 0.0 |
| | | **CL300** | 6740.0 | 6390.0 | 4650.0 | 2900.0 | 1590.0 | 767.0 | 0.0 |
| **500** | **20"** | **CL150** | 9590.0 | 9050.0 | 6320.0 | 3850.0 | 2070.0 | 948.0 | 0.0 |
| | | **CL300** | 7800.0 | 7290.0 | 5460.0 | 3600.0 | 2040.0 | 1000.0 | 0.0 |
| **600** | **24"** | **CL150** | 14300.0 | 13400.0 | 9620.0 | 6100.0 | 3560.0 | 1950.0 | 0.0 |
| | | **CL300** | 12400.0 | 11800.0 | 8550.0 | 5650.0 | 3240.0 | 1770.0 | 0.0 |

Cv values in m³/h

## *Product conformity*

**Machinery Directive:** 2006/42/EC

**Pressure Equipment Directive:** 2014/68/EU

**Food:** FDA

**EAC:** The product is certified according to EAC.

**Explosion protection:** 2014/34/EU (ATEX)

**ATEX marking:** Special function code X
Gas: Ⓔx II -/2 G Ex h -/IIC T6...T3 -/Gb X
Dust: Ⓔx II -/2D Ex h -/IIIC T150°C -/Db X

**TA Luft (German Clean Air Act):** The product meets the following requirements under the max. permissible operating conditions:

- Tightness or compliance with the specific leak rate within the sense of TA-Luft as well as VDI 2440
- Compliance with the requirements in accordance with DIN EN ISO 15848-1, Table C.2, Class BH

## Mechanical data

**Torques:**

| DN | NPS | Connection type code [1] | | | | | | | | | |
|---|---|---|---|---|---|---|---|---|---|---|---|
| | | D, 2, 3 | | | | | M, 5, 6 | | | | |
| | | Maximum pressure differential [bar] | | | | | | | | | |
| | | 0.0 | 6.0 | 10.0 | 16.0 | 20.0 | 0.0 | 20.0 | 25.0 | 40.0 | 50.0 |
| **50** | **2"** | 33.0 | 33.0 | 34.0 | 35.0 | 37.0 | 33.0 | 37.0 | 38.0 | 40.0 | 42.0 |
| **65** | **2½"** | 43.0 | 44.0 | 45.0 | 46.0 | 50.0 | 43.0 | 50.0 | 52.0 | 57.0 | 60.0 |
| **80** | **3"** | 54.0 | 56.0 | 57.0 | 58.0 | 64.0 | 54.0 | 64.0 | 67.0 | 74.0 | 79.0 |
| **100** | **4"** | 68.0 | 71.0 | 72.0 | 74.0 | 84.0 | 68.0 | 84.0 | 88.0 | 99.0 | 107.0 |
| **125** | **5"** | 90.0 | 94.0 | 96.0 | 100.0 | 115.0 | 90.0 | 115.0 | 121.0 | 139.0 | 151.0 |
| **150** | **6"** | 114.0 | 120.0 | 123.0 | 128.0 | 149.0 | 123.0 | 158.0 | 167.0 | 193.0 | 211.0 |
| **200** | **8"** | 181.0 | 192.0 | 200.0 | 211.0 | 258.0 | 202.0 | 280.0 | 299.0 | 358.0 | 397.0 |
| **250** | **10"** | 250.0 | 268.0 | 280.0 | 297.0 | 372.0 | 287.0 | 409.0 | 439.0 | 530.0 | 591.0 |
| **300** | **12"** | 357.0 | 387.0 | 408.0 | 438.0 | 567.0 | 393.0 | 603.0 | 655.0 | 813.0 | 918.0 |
| **350** | **14"** | 559.0 | 607.0 | 640.0 | 688.0 | 721.0 | 699.0 | 861.0 | 901.0 | 1023.0 | 1104.0 |
| **400** | **16"** | 950.0 | 1027.0 | 1079.0 | 1156.0 | 1207.0 | 1188.0 | 1445.0 | 1509.0 | 1701.0 | 1830.0 |
| **450** | **18"** | 1420.0 | 1534.0 | 1611.0 | 1725.0 | 1802.0 | 1629.0 | 2011.0 | 2107.0 | 2394.0 | 2585.0 |
| **500** | **20"** | 1967.0 | 2144.0 | 2262.0 | 2439.0 | 2557.0 | 2499.0 | 3089.0 | 3237.0 | 3679.0 | 3974.0 |
| **600** | **24"** | 3324.0 | 3579.0 | 3748.0 | 4003.0 | 4173.0 | 3579.0 | 4429.0 | 4641.0 | 5278.0 | 5703.0 |

Torques in Nm

1) **Connection type**
Code 2: PN 10 / flange EN 1092, face-to-face dimension FTF EN 558 series 108
Code 3: PN 16 / flange EN 1092, face-to-face dimension FTF EN 558 series 108
Code 5: PN 25 / flange EN 1092, face-to-face dimension FTF EN 558 series 20
Code 6: PN 40 / flange EN 1092, face-to-face dimension FTF EN 558 series 109
Code D: ANSI B16.5, Class 150, face-to-face dimension FTF EN 558 series 108
Code M: ANSI B16.5, Class 300, face-to-face dimension FTF EN 558 series 109

**Weight:**

| DN | NPS | Connection type code [1] | |
|---|---|---|---|
| | | D, 2, 3 | M, 5, 6 |
| **50** | **2"** | 3.2 | 3.2 |
| **65** | **2½"** | 3.6 | 3.6 |
| **80** | **3"** | 4.9 | 4.9 |
| **100** | **4"** | 7.5 | 7.5 |
| **125** | **5"** | 8.0 | 8.0 |
| **150** | **6"** | 12.0 | 14.0 |
| **200** | **8"** | 18.0 | 23.0 |
| **250** | **10"** | 31.0 | 40.0 |
| **300** | **12"** | 47.0 | 66.0 |
| **350** | **14"** | 77.0 | 114.0 |
| **400** | **16"** | 96.0 | 146.0 |
| **450** | **18"** | 133.0 | 212.0 |
| **500** | **20"** | 156.0 | 261.0 |
| **600** | **24"** | 268.0 | 385.0 |

Weights in kg

1) **Connection type**
Code 2: PN 10 / flange EN 1092, face-to-face dimension FTF EN 558 series 108
Code 3: PN 16 / flange EN 1092, face-to-face dimension FTF EN 558 series 108
Code 5: PN 25 / flange EN 1092, face-to-face dimension FTF EN 558 series 20
Code 6: PN 40 / flange EN 1092, face-to-face dimension FTF EN 558 series 109
Code D: ANSI B16.5, Class 150, face-to-face dimension FTF EN 558 series 108
Code M: ANSI B16.5, Class 300, face-to-face dimension FTF EN 558 series 109

**Flow direction:** Indicated by an arrow on the product

# Dimensions

## Actuator flange

### Flange PN10 (code 2), PN16 (code 3), CLASS 150 (code D)

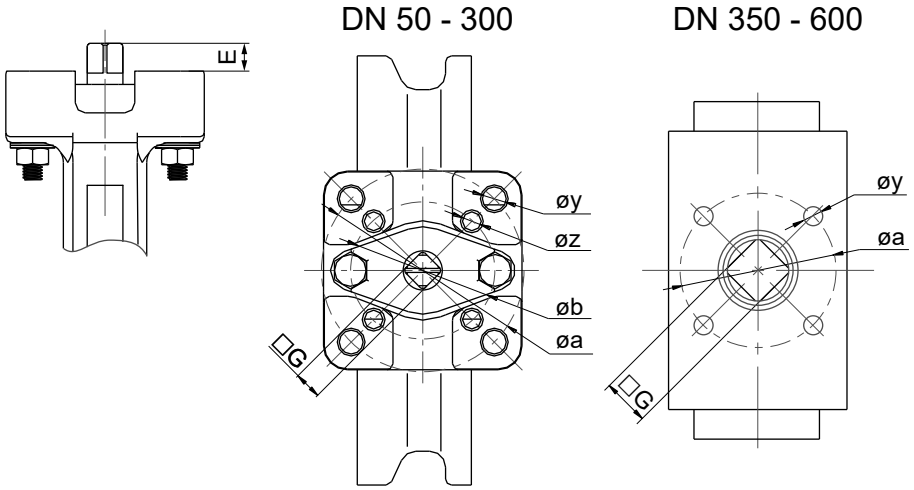


| DN | NPS | ISO 5211 | øa | øb | E | □G | øy | øz |
|---|---|---|---|---|---|---|---|---|
| **50** | **2"** | F05 | 50.0 | - | 15.0 | 11.0 | 4 x 7.0 | - |
| **65** | **2½"** | F05/F07 | 70.0 | 50.0 | 15.0 | 11.0 | 4 x 9.5 | 4 x 7.0 |
| **80** | **3"** | F05/F07 | 70.0 | 50.0 | 15.0 | 11.0 | 4 x 9.5 | 4 x 7.0 |
| **100** | **4"** | F07 | 70.0 | - | 19.0 | 14.0 | 4 x 9.5 | - |
| **125** | **5"** | F07 | 70.0 | - | 19.0 | 14.0 | 4 x 9.5 | - |
| **150** | **6"** | F07/F10 | 102.0 | 70.0 | 19.0 | 14.0 | 4 x 12.0 | 4 x 9.5 |
| **200** | **8"** | F10 | 102.0 | - | 22.0 | 17.0 | 4 x 12.0 | - |
| **250** | **10"** | F10/F12 | 125.0 | 102.0 | 27.0 | 22.0 | 4 x 14.0 | 4 x 12.0 |
| **300** | **12"** | F12/F14 | 140.0 | 125.0 | 32.0 | 27.0 | 4 x 18.0 | 4 x 14.0 |
| **350** | **14"** | F14/F16 | 165.0 | 140.0 | 29.0 | 27.0 | 4 x 22.0 | 4 x 18.0 |
| **400** | **16"** | F14/F16 | 165.0 | 140.0 | 38.0 | 36.0 | 4 x 22.0 | 4 x 18.0 |
| **450** | **18"** | F14/F16 | 165.0 | 140.0 | 38.0 | 36.0 | 4 x 22.0 | 4 x 18.0 |
| **500** | **20"** | F14/F16 | 165.0 | 140.0 | 48.0 | 46.0 | 4 x 22.0 | 4 x 18.0 |
| **600** | **24"** | F16/F25 | 254.0 | 165.0 | 48.0 | 46.0 | 8 x 19.0 | 4 x 22.0 |

Dimensions in mm

## *Flange PN25 (code 5), PN40 (code 6), CLASS 300 (code M)*

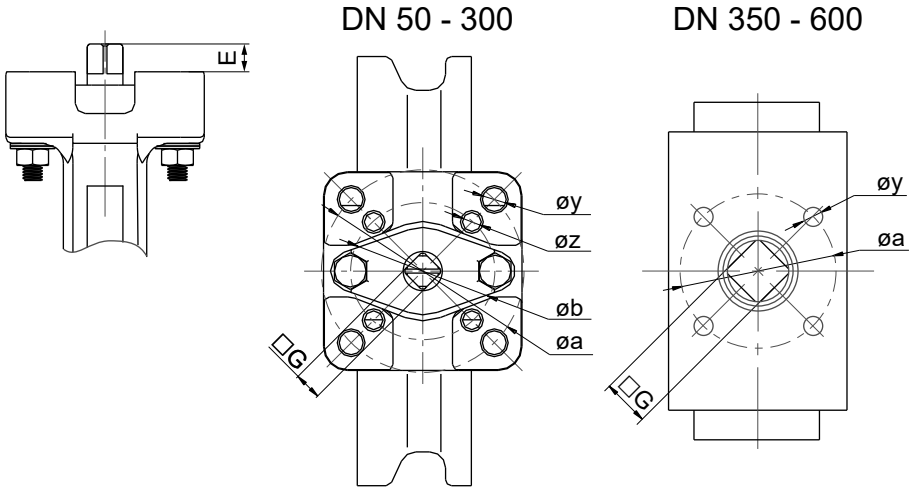


| DN | NPS | ISO 5211 | øa | øb | E | □G | øy | øz |
|---|---|---|---|---|---|---|---|---|
| **50** | **2"** | F05 | 50.0 | - | 15.0 | 11.0 | 4 x 7.0 | - |
| **65** | **2½"** | F05/F07 | 70.0 | 50.0 | 15.0 | 11.0 | 4 x 9.5 | 4 x 7.0 |
| **80** | **3"** | F05/F07 | 70.0 | 50.0 | 15.0 | 11.0 | 4 x 9.5 | 4 x 7.0 |
| **100** | **4"** | F07 | 70.0 | - | 19.0 | 14.0 | 4 x 9.5 | - |
| **125** | **5"** | F07 | 70.0 | - | 19.0 | 14.0 | 4 x 9.5 | - |
| **150** | **6"** | F10 | 102.0 | - | 22.0 | 17.0 | 4 x 12.0 | - |
| **200** | **8"** | F10/F12 | 125.0 | 102.0 | 27.0 | 22.0 | 4 x 14.0 | 4 x 12.0 |
| **250** | **10"** | F12/F14 | 140.0 | 125.0 | 32.0 | 27.0 | 4 x 18.0 | 4 x 13.5 |
| **300** | **12"** | F14 | 140.0 | - | 32.0 | 27.0 | 4 x 18.0 | - |
| **350** | **14"** | F14/F16 | 165.0 | 140.0 | 38.0 | 36.0 | 4 x 22.0 | 4 x 18.0 |
| **400** | **16"** | F14/F16 | 165.0 | 140.0 | 48.0 | 46.0 | 4 x 22.0 | 4 x 18.0 |
| **450** | **18"** | F16/F25 | 254.0 | 165.0 | 48.0 | 46.0 | 8 x 19.0 | 4 x 22.0 |
| **500** | **20"** | F16/F25 | 254.0 | 165.0 | 57.0 | 55.0 | 8 x 19.0 | 4 x 22.0 |
| **600** | **24"** | F16/F25 | 254.0 | 165.0 | 57.0 | 55.0 | 8 x 19.0 | 4 x 22.0 |

Dimensions in mm

# Body

## Wafer body configuration

### Flange PN10 (code 2), PN16 (code 3), CLASS 150 (code D)

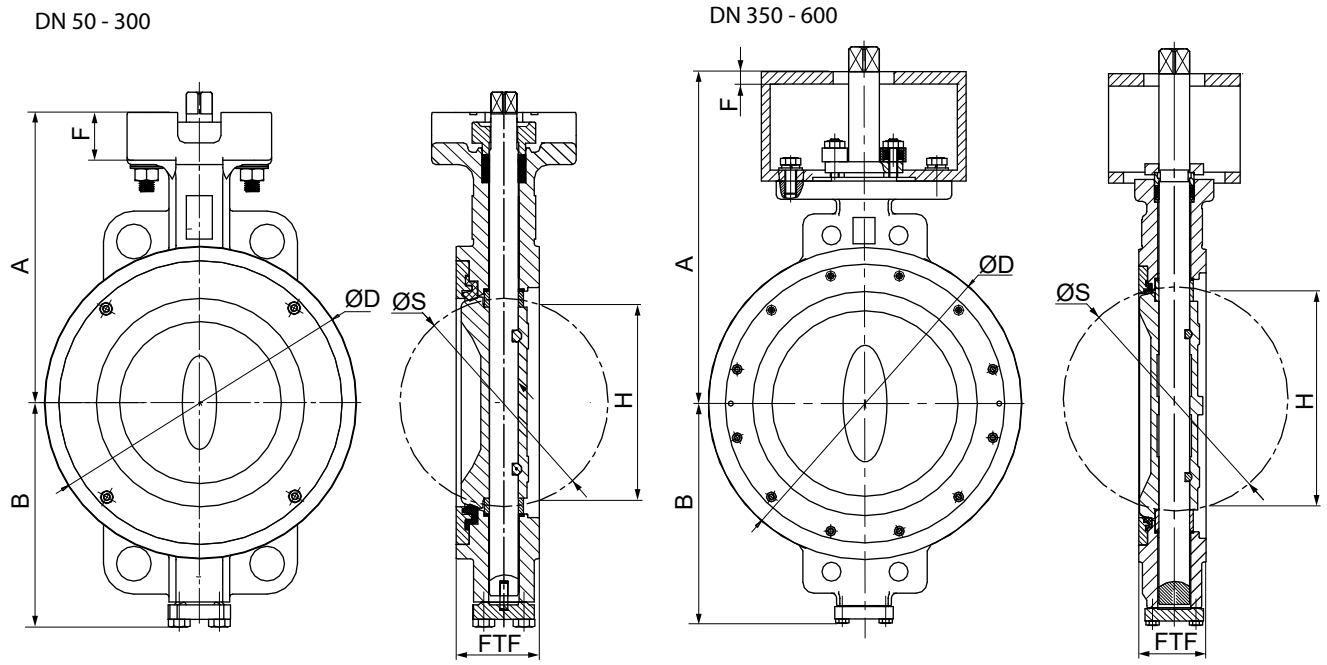


| DN | NPS | A | B | ØD | F | FTF | H | ØS |
|---|---|---|---|---|---|---|---|---|
| **50** | **2"** | 124.0 | 96.4 | 100.0 | - | 50.0 | 15.0 | 38.6 |
| **65** | **2½"** | 122.0 | 101.0 | 105.0 | - | 51.5 | 49.0 | 57.0 |
| **80** | **3"** | 143.5 | 115.0 | 132.0 | - | 49.5 | 69.0 | 74.0 |
| **100** | **4"** | 160.0 | 128.0 | 158.0 | - | 56.5 | 91.0 | 96.0 |
| **125** | **5"** | 176.5 | 148.0 | 186.0 | - | 57.0 | 103.0 | 111.0 |
| **150** | **6"** | 198.0 | 157.0 | 216.0 | 33.0 | 57.5 | 140.0 | 144.0 |
| **200** | **8"** | 230.0 | 195.0 | 266.0 | 35.0 | 63.0 | 179.0 | 188.0 |
| **250** | **10"** | 273.0 | 236.0 | 324.0 | 34.0 | 71.0 | 231.0 | 237.0 |
| **300** | **12"** | 319.0 | 262.0 | 381.0 | 30.0 | 81.5 | 276.0 | 283.0 |
| **350** | **14"** | 455.0 | 303.0 | 429.0 | 17.0 | 92.0 | 300.0 | 307.0 |
| **400** | **16"** | 490.0 | 337.5 | 480.0 | 17.0 | 101.5 | 347.0 | 363.5 |
| **450** | **18"** | 502.0 | 353.5 | 533.0 | 17.0 | 114.0 | 394.0 | 414.0 |
| **500** | **20"** | 524.0 | 376.5 | 584.0 | 17.0 | 127.0 | 434.0 | 458.0 |
| **600** | **24"** | 625.0 | 453.5 | 692.0 | 22.0 | 154.0 | 524.0 | 550.0 |

Dimensions in mm

## *Flange PN25 (code 5), PN40 (code 6), CLASS 300 (code M)*

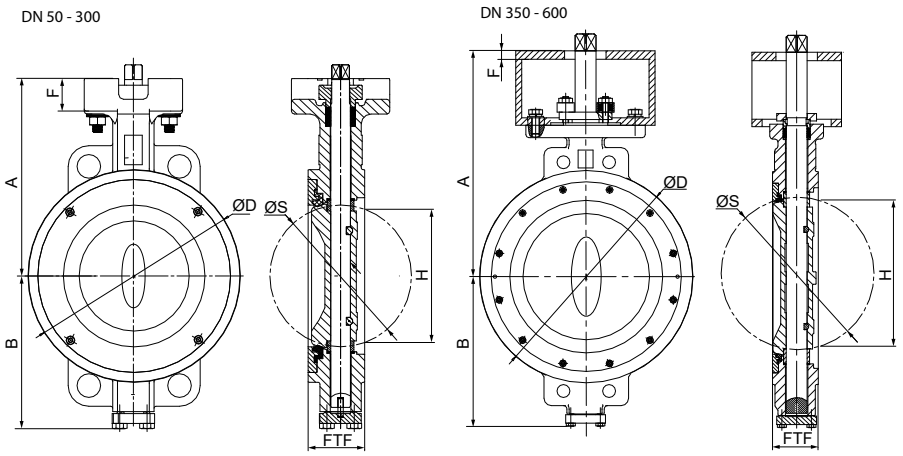


| DN | NPS | A | B | ØD | F | FTF | H | ØS |
|---|---|---|---|---|---|---|---|---|
| **50** | **2"** | 124.0 | 96.4 | 100.0 | 22.0 | 50.0 | 15.0 | 38.6 |
| **65** | **2½"** | 122.0 | 101.0 | 105.0 | 15.0 | 51.5 | 49.0 | 57.0 |
| **80** | **3"** | 143.5 | 115.0 | 132.0 | 18.0 | 49.5 | 69.0 | 74.0 |
| **100** | **4"** | 160.0 | 128.0 | 158.0 | 23.0 | 56.5 | 91.0 | 96.0 |
| **125** | **5"** | 176.5 | 148.0 | 186.0 | 23.0 | 57.0 | 103.0 | 111.0 |
| **150** | **6"** | 217.5 | 170.5 | 216.0 | 26.0 | 59.0 | 140.0 | 144.0 |
| **200** | **8"** | 250.0 | 206.5 | 270.0 | 35.0 | 73.0 | 179.0 | 188.0 |
| **250** | **10"** | 303.0 | 248.0 | 324.0 | 31.0 | 83.0 | 231.0 | 237.0 |
| **300** | **12"** | 335.5 | 291.0 | 409.0 | 39.0 | 92.0 | 276.0 | 283.0 |
| **350** | **14"** | 470.0 | 320.5 | 445.0 | 17.0 | 117.0 | 300.0 | 315.0 |
| **400** | **16"** | 500.5 | 365.5 | 470.0 | 17.0 | 133.5 | 347.0 | 363.5 |
| **450** | **18"** | 531.0 | 382.5 | 560.0 | 17.0 | 149.0 | 394.0 | 414.0 |
| **500** | **20"** | 593.0 | 426.5 | 585.0 | 22.0 | 162.0 | 434.0 | 456.5 |
| **600** | **24"** | 645.0 | 498.0 | 692.0 | 22.0 | 181.0 | 524.0 | 550.0 |

Dimensions in mm

## *Connections*

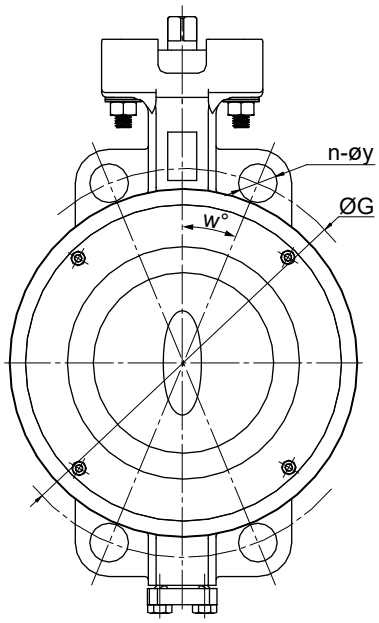


| DN | NPS | PN10 | | | | PN16 | | | | PN25 | | | | PN40 | | | |
|---|---|---|---|---|---|---|---|---|---|---|---|---|---|---|---|---|---|
| | | n | ØG | w° | øy | n | ØG | w° | øy | n | ØG | w° | øy | n | ØG | w° | øy |
| **50** | **2"** | 4 | 125.0 | 45.0 | 18.0 | 4 | 125.0 | 45.0 | 18.0 | 4 | 125.0 | 45.0 | 18.0 | 4 | 125.0 | 45.0 | 18.0 |
| **65** | **2½"** | 8 | 145.0 | 22.5 | 18.0 | 8 | 145.0 | 22.5 | 18.0 | 8 | 145.0 | 22.5 | 18.0 | 8 | 145.0 | 45.0 | 18.0 |
| **80** | **3"** | 8 | 160.0 | 22.5 | 19.0 | 8 | 160.0 | 22.5 | 19.0 | 8 | 160.0 | 22.5 | 19.0 | 8 | 160.0 | 22.5 | 19.0 |
| **100** | **4"** | 8 | 180.0 | 22.5 | 18.0 | 8 | 180.0 | 22.5 | 18.0 | 8 | 190.0 | 22.5 | 22.0 | 8 | 190.0 | 22.5 | 22.0 |
| **125** | **5"** | 8 | 210.0 | 22.5 | 18.0 | 8 | 210.0 | 22.5 | 18.0 | 8 | 220.0 | 22.5 | 26.0 | 8 | 220.0 | 22.5 | 26.0 |
| **150** | **6"** | 8 | 240.0 | 22.5 | 22.0 | 8 | 240.0 | 22.5 | 22.0 | 8 | 250.0 | 22.5 | 28.0 | 8 | 250.0 | 22.5 | 28.0 |
| **200** | **8"** | 8 | 295.0 | 22.5 | 24.0 | 12 | 295.0 | 15.0 | 24.0 | 12 | 310.0 | 15.0 | 28.0 | 12 | 320.0 | 15.0 | 30.0 |
| **250** | **10"** | 12 | 350.0 | 15.0 | 22.0 | 12 | 355.0 | 15.0 | 26.0 | 12 | 370.0 | 15.0 | 30.0 | 12 | 385.0 | 15.0 | 33.0 |
| **300** | **12"** | 12 | 400.0 | 15.0 | 22.0 | 12 | 410.0 | 15.0 | 26.0 | 16 | 430.0 | 11.25 | M27 | 16 | 450.0 | 11.25 | M30 |
| **350** | **14"** | 16 | 460.0 | 11.25 | 22.0 | 16 | 470.0 | 11.25 | 26.0 | 16 | 490.0 | 11.25 | M30 | 16 | 510.0 | 11.25 | M33 |
| **400** | **16"** | 16 | 515.0 | 11.25 | 28.0 | 16 | 525.0 | 11.25 | 30.0 | 16 | 550.0 | 11.25 | M33 | 16 | 585.0 | 11.25 | M36 |
| **450** | **18"** | 20 | 565.0 | 9.0 | M24 | 20 | 585.0 | 9.0 | M27 | 20 | 600.0 | 9.0 | M33 | 20 | 610.0 | 9.0 | M36 |
| **500** | **20"** | 20 | 620.0 | 9.0 | M24 | 20 | 650.0 | 9.0 | M30 | 20 | 660.0 | 9.0 | M33 | 20 | 670.0 | 9.0 | M39 |
| **600** | **24"** | 20 | 725.0 | 9.0 | M27 | 20 | 770.0 | 9.0 | M33 | 20 | 770.0 | 9.0 | M36 | 20 | 795.0 | 9.0 | M45 |

Dimensions in mm
n = number of bolt holes / bolts

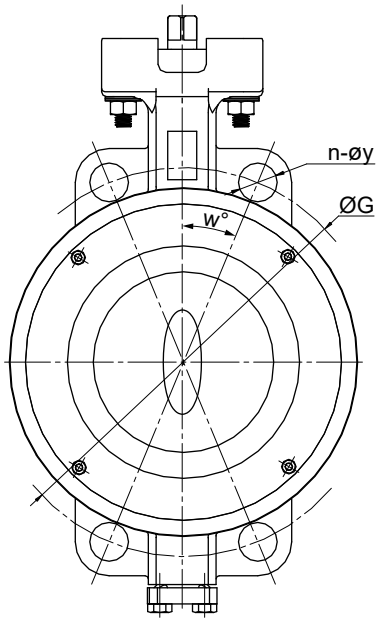


| DN | NPS | CLASS 150 | | | | CLASS 300 | | | |
|---|---|---|---|---|---|---|---|---|---|
| | | n | ØG | w° | øy | n | ØG | w° | øy |
| **50** | **2"** | 4 | 120.5 | 45.0 | 19.0 | 8 | 127.0 | 22.5 | 18.0 |
| **65** | **2½"** | 4 | 139.5 | 45.0 | 18.0 | 8 | 149.0 | 22.5 | 22.0 |
| **80** | **3"** | 4 | 152.5 | 45.0 | 19.0 | 8 | 168.5 | 22.5 | 22.0 |
| **100** | **4"** | 8 | 190.5 | 22.5 | 19.0 | 8 | 200.0 | 22.5 | 22.0 |
| **125** | **5"** | 8 | 216.0 | 22.5 | 24.0 | 8 | 235.0 | 22.5 | 22.0 |
| **150** | **6"** | 8 | 241.0 | 22.5 | 24.0 | 12 | 270.0 | 15.0 | 24.0 |
| **200** | **8"** | 8 | 298.5 | 22.5 | 24.0 | 12 | 330.0 | 15.0 | 28.0 |
| **250** | **10"** | 12 | 362.0 | 15.0 | 26.0 | 16 | 387.5 | 11.25 | 1” x 8UN |
| **300** | **12"** | 12 | 432.0 | 15.0 | 26.0 | 16 | 451.0 | 11.25 | 1⅛” x 8UN |
| **350** | **14"** | 12 | 476.0 | 15.0 | 30.0 | 20 | 514.5 | 9.0 | 1⅛” x 8UN |
| **400** | **16"** | 16 | 540.0 | 11.25 | 28.6 | 20 | 571.5 | 9.0 | 1¼” x 8UN |
| **450** | **18"** | 16 | 578.0 | 11.25 | 1⅛” x 8UN | 24 | 628.5 | 7.5 | 1¼” x 8UN |
| **500** | **20"** | 20 | 635.0 | 9.0 | 1⅛” x 8UN | 24 | 685.5 | 7.5 | 1¼” x 8UN |
| **600** | **24"** | 20 | 749.5 | 9.0 | 1¼” x 8UN | 24 | 812.8 | 7.5 | 1½” x 8UN |

Dimensions in mm
n = number of bolt holes / bolts

## *Lug body configuration*

DN 50 - DN 300

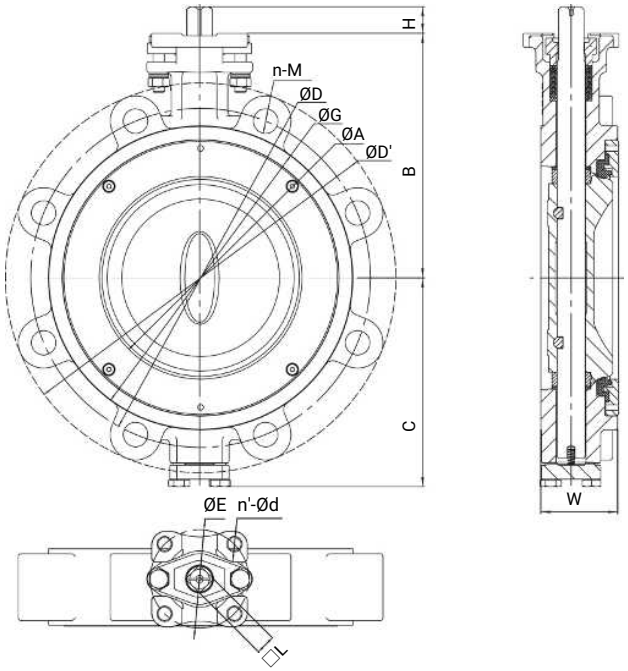


DN 350 - DN 600

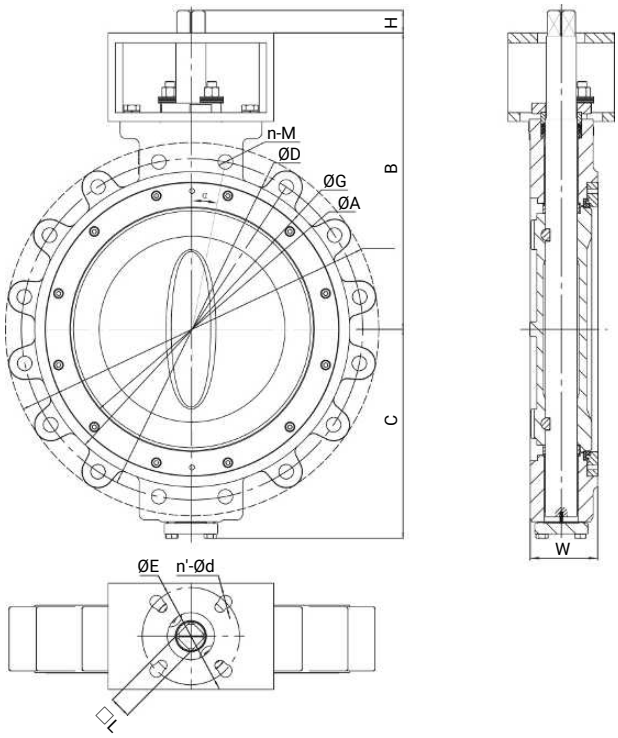


| DN | NPS | ISO 5211 | ØA | B | C | ØD' | ØG | H | □L | W | ØE | n'-ØF |
|---|---|---|---|---|---|---|---|---|---|---|---|---|
| 50 | 2" | F05 | 38.5 | 116.0 | 86.0 | 155.0 | 100.0 | 15.0 | 11.0 | 42.0 | 50.0 | 4.0-7.0 |
| 65 | 2,5" | F05 | 57.0 | 126.2 | 93.0 | 174.0 | 105.0 | 15.0 | 11.0 | 45.5 | 50.0 | 4.0-7.0 |
| 80 | 3" | F05 | 74.0 | 133.8 | 102.0 | 182.5 | 132.0 | 15.0 | 11.0 | 47.0 | 50.0 | 4.0-7.0 |
| 100 | 4" | F07 | 96.0 | 148.5 | 118.0 | 220.5 | 158.0 | 19.0 | 14.0 | 52.0 | 70.0 | 4.0-9.5 |
| 125 | 5" | F07 | 111.0 | 161.5 | 133.0 | 250.0 | 186.0 | 19.0 | 14.0 | 54.0 | 70.0 | 4.0-9.5 |
| 150 | 6" | F07 | 144.0 | 173.8 | 148.5 | 277.0 | 216.0 | 19.0 | 14.0 | 57.5 | 70.0 | 4.0-9.5 |
| 200 | 8" | F10 | 188.0 | 230.0 | 195.0 | 335.0 /331.0 | 266.0 | 22.0 | 17.0 | 60.0 | 102.0 | 4.0-12.0 |
| 250 | 10" | F10/F12 | 237.0 | 273.0 | 235.0 | 402.0 | 320.0 | 27.0 | 22.0 | 60.5 | 102.0/125.0 | 4.0-12.0/4.0-14.0 |
| 300 | 12" | F12/F14 | 283.0 | 319.0 | 261.0 | 472.0 | 378.0 | 32.0 | 27.0 | 78.5 | 150.0/140.0 | 4.0-14.0/4.0-18.0 |
| 350 | 14" | F14/F16 | 302.5 | 455.0 | 303.0 | 520.0 | 429.0 | 29.0 | 27.0 | 92.0 | 140.0/165.0 | 4.0-18.0/4.0-22.0 |
| 400 | 16" | F14/F16 | 363.5 | 490.0 | 342.0 | 588.0 | 480.0 | 38.0 | 36.0 | 101.6 | 140.0/165.0 | 4.0-18.0/4.0-22.0 |
| 450 | 18" | F14/F16 | 413.4 | 502.0 | 353.0 | 632.0 | 533.0 | 38.0 | 36.0 | 114.0 | 140.0/165.0 | 4.0-18.0/4.0-22.0 |
| 500 | 20" | F14/F16 | 458.0 | 524.0 | 376.0 | 704.0 | 584.0 | 48.0 | 46.0 | 127.0 | 140.0/165.0 | 4.0-18.0/4.0-22.0 |
| 600 | 24" | F16/F25 | 550.0 | 625.0 | 453.0 | 830.0 | 692.0 | 48.0 | 46.0 | 154.0 | 165.0/254.0 | 4.0-23.0/8.0-19.0 |

Dimensions in mm
n = number of bolt holes / bolts

## *Connections*

DN 50 - DN 300

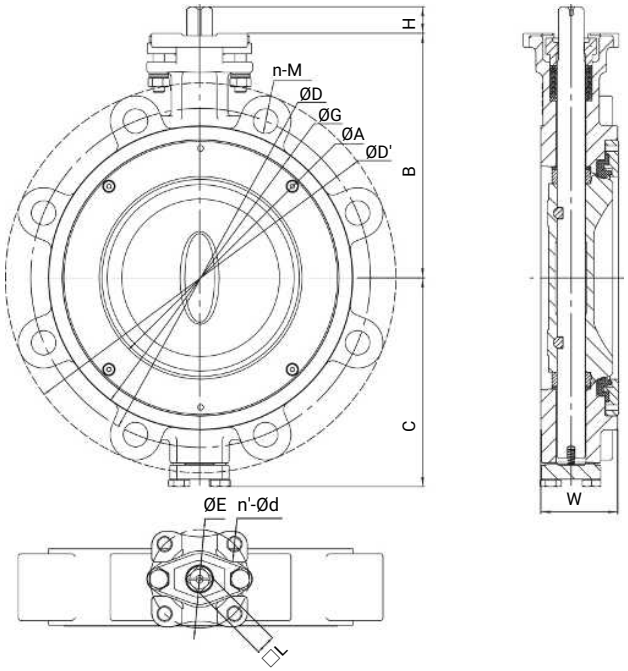


DN 350 - DN 600

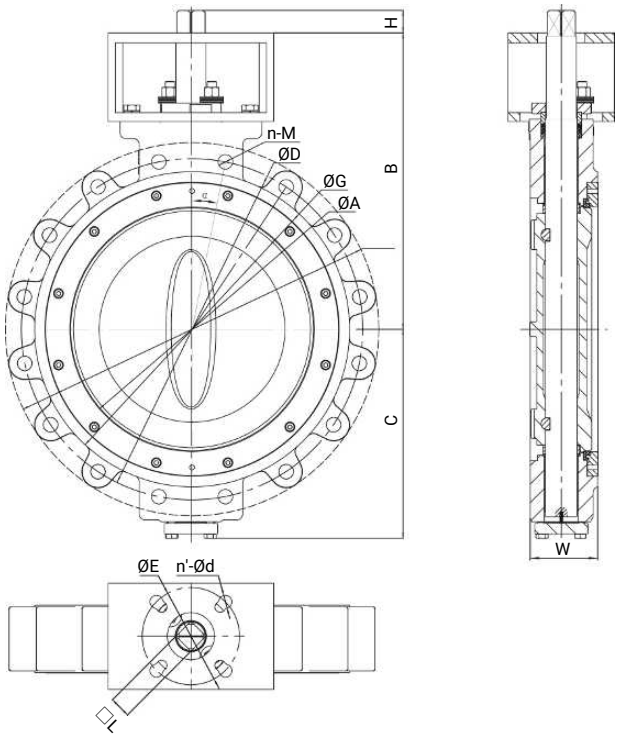


**PN10/PN16**

| DN | NPS | PN10 | | | | PN16 | | | |
|---|---|---|---|---|---|---|---|---|---|
| | | ØD | n-Ød | n-M | α | ØD | n-Ød | n-M | α |
| 50 | 2" | 125.0 | 4-M16 | - | 45.00° | 125.0 | 4-M16 | - | 45.00° |
| 65 | 2,5" | 145.0 | 4-M16 | - | 45.00° | 145.0 | 4-M16 | - | 45.00° |
| 80 | 3" | - | - | - | - | - | - | - | - |
| 100 | 4" | 180.0 | 8-M16 | - | 22.50° | 180.0 | 8-M16 | - | 22.50° |
| 125 | 5" | 210.0 | 8-M16 | - | 22.50° | 210.0 | 8-M16 | - | 22.50° |
| 150 | 6" | 240.0 | 8-M20 | - | 22.50° | 240.0 | 8-M20 | - | 22.50° |
| 200 | 8" | 295.0 | 8-M20 | - | 22.50° | 295.0 | 12-M20 | - | 22.50° |
| 250 | 10" | 350.0 | 12-M20 | - | 15.00° | 355.0 | 12-M24 | - | 15.00° |
| 300 | 12" | 400.0 | 12-M20 | - | 15.00° | 410.0 | 12-M24 | - | 15.00° |
| 350 | 14" | 460.0 | - | 16-M20 | 11.25° | 470.0 | - | 16-M24 | 11.25° |
| 400 | 16" | 515.0 | - | 16-M24 | 11.25° | 525.0 | - | 16-M27 | 11.25° |
| 450 | 18" | 565.0 | - | 20-M24 | 9.00° | 585.0 | - | 20-M27 | 9.00° |
| 500 | 20" | 620.0 | - | 20-M24 | 9.00° | 650.0 | - | 20-M30 | 9.00° |
| 600 | 24" | 725.0 | - | 20-M27 | 9.00° | 770.0 | - | 20-M33 | 9.00° |

Dimensions in mm
n = number of bolt holes / bolts

**CLASS150**

| DN | NPS | ØD | n-Ød | n-M | α |
|---|---|---|---|---|---|
| 50 | 2" | 120.5 | 4-5/8"-11UN | - | 45.00° |
| 65 | 2,5" | 139.5 | 4-5/8"-11UN | - | 45.00° |
| 80 | 3" | 152.5 | 4-5/8"-11UN | - | 45.00° |
| 100 | 4" | 190.5 | 8-5/8"-11UN | - | 22.50° |
| 125 | 5" | 216.0 | 8-3/4"-10UN | - | 22.50° |
| 150 | 6" | 241.0 | 8-3/4"-10UN | - | 22.50° |
| 200 | 8" | 298.5 | 8-3/4"-10UN | - | 22.50° |
| 250 | 10" | 362.0 | 12-7/8"-9UN | - | 15.00° |
| 300 | 12" | 432.0 | 12-7/8"-9UN | - | 15.00° |
| 350 | 14" | - | - | - | - |
| 400 | 16" | 539.8 | - | 16-1-UNC | 11.25° |
| 450 | 18" | - | - | - | - |
| 500 | 20" | 635.0 | - | 20-1⅛-8UN | 9.00° |
| 600 | 24" | 749.3 | - | 20-1¼-8UN | 9.00° |

Dimensions in mm
n = number of bolt holes / bolts

## *U section body configuration*

DN 150 - DN 300

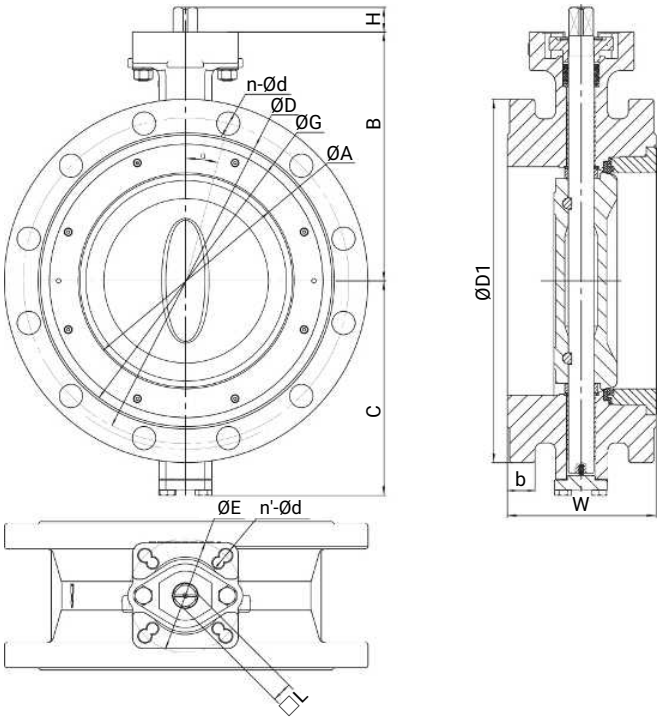


DN 350 - DN 600

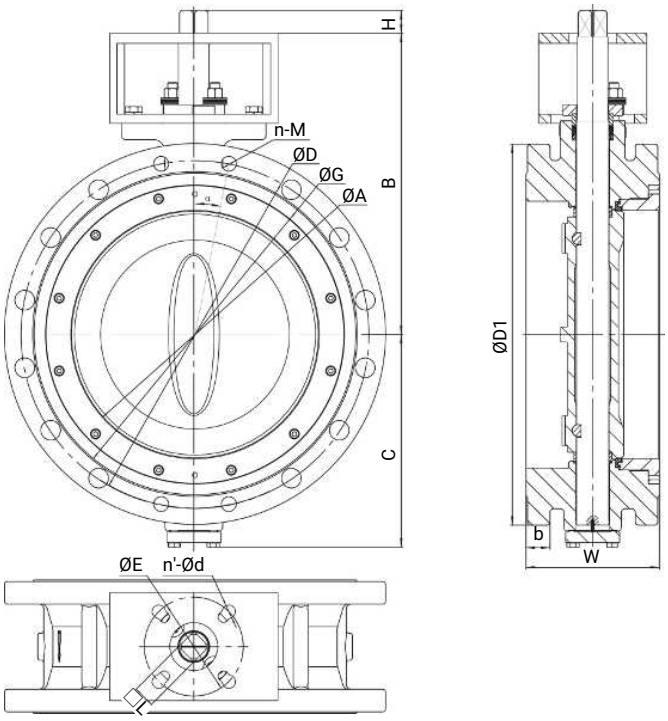


| DN | NPS | ØA | B | C | ØG | H | □L | W | ØE | n'-ØF | ISO 5211 |
|---|---|---|---|---|---|---|---|---|---|---|---|
| 150 | 6" | 144.0 | 198.0 | 157.0 | 216.0 | 19.0 | 14.0 | 140.0 | 70.0/102.0 | 4.0-9.5/4.0-12.0 | F07/F10 |
| 200 | 8" | 188.0 | 230.0 | 195.0 | 266.0 | 22.0 | 17.0 | 152.0 | 102.0 | 4.0-12.0 | F10 |
| 250 | 10" | 237.0 | 273.0 | 236.0 | 324.0 | 27.0 | 22.0 | 165.0 | 102.0/125.0 | 4.0-12.0/4.0-14.0 | F10/F12 |
| 300 | 12" | 283.0 | 318.5 | 262.0 | 381.0 | 32.0 | 27.0 | 178.0 | 125.0/140.0 | 4.0-14.0/4.0-18.0 | F12/F14 |
| 350 | 14" | 302.5 | 455.0 | 303.0 | 429.0 | 29.0 | 27.0 | 190.0 | 140.0/165.0 | 4.0-18.0/4.0-22.0 | F14/F16 |
| 400 | 16" | 363.5 | 490.0 | 342.0 | 480.0 | 38.0 | 36.0 | 216.0 | 140.0/165.0 | 4.0-18.0/4.0-22.0 | F14/F16 |
| 450 | 18" | 413.4 | 502.0 | 353.0 | 533.0 | 38.0 | 36.0 | 222.0 | 140.0/165.0 | 4.0-18.0/4.0-22.0 | F14/F16 |
| 500 | 20" | 458.0 | 524.0 | 376.0 | 584.0 | 48.0 | 46.0 | 229.0 | 140.0/165.0 | 4.0-18.0/4.0-22.0 | F14/F16 |
| 600 | 24" | 550.0 | 625.0 | 453.0 | 692.0 | 48.0 | 46.0 | 267.0 | 165.0/254.0 | 4.0-23.0/8.0-19.0 | F16/F25 |

Dimensions in mm
n = number of bolt holes / bolts

### *Connections*

**CLASS150**

| DN | NPS | ØD | n-Ød | n-M | α |
|---|---|---|---|---|---|
| 150 | 6" | 241.0 | 8.0-24.0 | - | 22.5° |
| 200 | 8" | 298.5 | 8.0-24.0 | - | 22.5° |
| 250 | 10" | 362.0 | 12.0-24.0 | - | 15.0° |
| 300 | 12" | 432.0 | 12.0-26.0 | - | 15.0° |
| 350 | 14" | 476.3 | - | 12-Ø30 | 15.0° |
| 400 | 16" | 539.8 | - | 4-1-8UNC, 12-Ø30 | 11.25° |
| 450 | 18" | 578.0 | - | 4-1⅛-8UNC, 12-Ø33 | 11.25° |
| 500 | 20" | 635.0 | - | 4-1⅛-8UNC, 16-Ø33 | 9.0° |
| 600 | 24" | 749.3 | - | 4-1¼-8UNC, 16-Ø36 | 9.0° |

Dimensions in mm
n = number of bolt holes / bolts

## *Gasket*

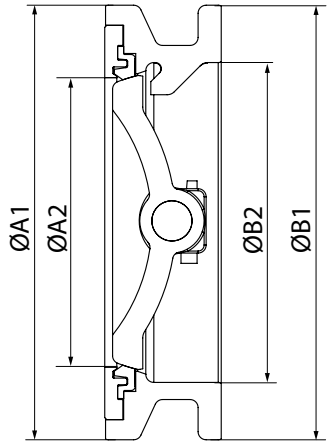


| DN | NPS | Connection | | | | | | | | | | | |
|---|---|---|---|---|---|---|---|---|---|---|---|---|---|
| | | PN10, PN16, CL150, PN25, PN40, CL300 | | | | CL150 | | | | CL300 | | | |
| | | ØA1 | ØA2 | ØB1 | ØB2 | ØA1 | ØA2 | ØB1 | ØB2 | ØA1 | ØA2 | ØB1 | ØB2 |
| **50** | **2"** | 99.6 | 38.6 | 99.0 | 56.0 | - | - | - | - | - | - | - | - |
| **65** | **2½"** | 105.0 | 57.0 | 104.8 | 74.0 | - | - | - | - | - | - | - | - |
| **80** | **3"** | 132.0 | 74.0 | 132.0 | 95.0 | - | - | - | - | - | - | - | - |
| **100** | **4"** | 157.5 | 96.0 | 156.7 | 115.8 | - | - | - | - | - | - | - | - |
| **125** | **5"** | 185.2 | 111.0 | 185.7 | 140.3 | - | - | - | - | - | - | - | - |
| **150** | **6"** | - | - | - | - | 215.2 | 144.0 | 215.2 | 159.9 | 215.5 | 144.0 | 215.5 | 159.5 |
| **200** | **8"** | - | - | - | - | 265.9 | 188.0 | 265.6 | 209.4 | 269.4 | 188.0 | 269.4 | 209.6 |
| **250** | **10"** | - | - | - | - | 324.0 | 118.5 | 324.0 | 254.0 | 324.0 | 237.0 | 324.0 | 254.0 |
| **300** | **12"** | - | - | - | - | 381.0 | 283.0 | 380.75 | 305.1 | 409.0 | 283.0 | 409.0 | 304.8 |
| **350** | **14"** | - | - | - | - | 427.6 | 307.2 | 428.0 | 365.0 | 445.0 | 314.7 | 445.0 | 364.0 |
| **400** | **16"** | - | - | - | - | 480.0 | 363.5 | 480.0 | 400.0 | 470.0 | 363.5 | 470.0 | 394.0 |
| **450** | **18"** | - | - | - | - | 533.0 | 414.0 | 533.0 | 444.5 | 560.0 | 414.2 | 560.0 | 444.5 |
| **500** | **20"** | - | - | - | - | 584.0 | 458.3 | 584.0 | 493.6 | 583.3 | 456.4 | 583.3 | 493.6 |
| **600** | **24"** | - | - | - | - | 692.0 | 549.8 | 692.0 | 610.0 | 690.3 | 549.8 | 690.3 | 599.7 |

Dimensions in mm

# Add-on components

**GEMÜ ADA/ASR**

**Pneumatic universal quarter turn actuators**

GEMÜ ADA is a pneumatic, double acting and GEMÜ ASR a pneumatic, single acting quarter turn actuator. Both work according to the double piston rack and pinion principle and aare suitable for mounting to butterfly valves or ball valves.

**GEMÜ DR/SC**

**Pneumatic premium quarter turn actuators**

GEMÜ DR is a pneumatic, double acting and GEMÜ SC a pneumatic, single acting quarter turn actuator. Both work according to the double piston rack and pinion principle and aare suitable for mounting to butterfly valves or ball valves.

**GEMÜ 9428**

**Motorized quarter turn actuator**

The product is a motorized quarter turn actuator. The actuator is designed for DC or AC operating voltages. A manual override and an optical position indicator are integrated as standard. The torque in the end positions is increased. This enables a closing curve matched to the valves.

**GEMÜ 9468**

**Motorized quarter turn actuator**

GEMÜ 9468 is a motorized quarter turn actuator. A manual override and an optical position indicator are integrated as standard. The torque in the end positions is increased. This enables a closing curve matched to the valves.

**GEMÜ J4C**

**Motorized quarter turn actuator**

The J4C actuator is a motorized quarter turn actuator. The motor is designed for DC and AC operating voltages. A manual override and an optical position indicator are integrated as standard. The end positions are potential-free and adjustable.

**GEMÜ DAHL / SAHL / GHL / VHL**

**Hand lever**

Lockable aluminium or stainless steel hand lever with standard flange acc. to EN ISO 5211 for manual operation (latch positions or continuous) of butterfly valves.

**GEMÜ GB**

**Handwheel with gearbox**

Handwheel with gearbox made of aluminium diecasting, GG25 or stainless steel with standard flange acc. to EN ISO 5211 for the manual operation of quarter turn valves. Option with chain wheel or prepared for limit switches.

**GEMÜ LSC**

**Limit switch box for quarter turn actuators**

The GEMÜ LSC limit switch box is suitable for mounting to manually and pneumatically operated quarter turn valves. It is also fitted with an optical position indicator for visual confirmation of position.

**GEMÜ LSF**

**Inductive dual sensor for quarter turn valves**

The GEMÜ LSF inductive dual sensor is suitable for mounting to manually and pneumatically operated quarter turn valves. It is also fitted with an optical position indicator for visual confirmation of position.

# Accessories

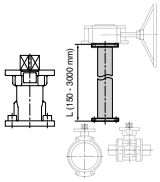


**GEMÜ RC0**

**Shaft extension**

The RC0 shaft extension for quarter turn valves is a distance piece between manually, pneumatically or electrically operated valves. This means that valves can be protected from flooding or better access for operation of the valve can be ensured (also for manual override).

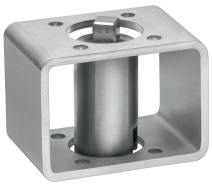

**GEMÜ MSC**

**Mounting kit**

The MSC mounting kit is an interface, for the same and different ends, to join flange designs according to ISO 5211. This mounting kit ensures thermal separation of actuator and valve body. It can also be used as height compensation for insulated pipelines. The mounting kit is available in steel, electrogalvanized and stainless steel in an open or closed design.

**GEMÜ ADH**

**Mounting sleeve**

The mounting sleeve accessories are available in the square and star geometry designs. These are used for the shaft and hub support for quarter turn actuators. Both sleeves have an internal square drive (please observe stated measurement dimensions here). The sleeve material is sintered metal and they are chemically nickel plated with a surface of 25 µm.

GEMÜ Gebr. Müller Apparatebau GmbH & Co. KG
Fritz-Müller-Straße 6-8, 74653 Ingelfingen-Criesbach, Germany
Phone +49 (0) 7940 1230 · info@gemue.de
www.gemu-group.com

Subject to alteration | 09.2025 | 88740698