Valves, measurement and control systems for biogas plants and biomethane treatment

GEMÜ

www.gemu-group.com

Application-based solutions for your project business

Having excellent references in the area of industrial markets shows that we clearly understand your requirements. With our wide range of products relating to valves, measurement and control systems, we comply with the requirements of various procedures in biogas generation and the treatment of biomethane, for example gas scrubbing, pressure swing adsorption or membrane separation.

GEMÜ solutions from a single source
As a system provider, we can react very flexibly to your needs on a case by case basis. We deliver both single components and complete systems – adjusted to your requirements.

Worldwide sales network
As a globally active company, we achieve fast reaction times, customer oriented service all over the world and a committed project management team.

Quality is the top priority
At GEMÜ, we only use carefully selected materials and our quality management system ensures continuous monitoring. This is also certified by external institutes.

As a medium, biogas and biomethane place stringent requirements on valves. Valves must cope with high switching cycles in biomethane treatment. Certain safety standards must be complied with when dealing with combustible gases in order to ensure plant reliability. No matter whether it's about the right valve selection or the appropriate approval. We are by your side in the selection of the appropriate valve.

Approvals for ignitable gases

Biogas plants are complex plants in which large quantities of ignitable gases are generated, stored and used.

To minimize the potential danger, we offer valves that comply with high safety standards like ATEX or SIL. Our range also includes valves with DVGW (German Technical and Scientific Association for Gas and Water) gas approval.

Professional control valve configuration

Inaccurate design of control valves can result in poor control results or premature wear. This is why GEMÜ places particular importance on the precise design of the control valves.

Our technical advisors support you personally in the configuration of control valves.

System solutions on a case by case basis

As a specialist in valve design, we also offer you system solutions on a case by case basis. These include, for example, small systems, partial sections and subassemblies, connection solutions on a case by case basis or test rigs and prototype construction.

Electrical solutions for local plants

For local plants, electrically operated valves can be an exciting alternative to pneumatics.
GEMÜ offers a wide choice of motorized valves with integrated positioners and process controllers, as well as connection to common communication systems.

Process landscape for biogas and biomethane treatment

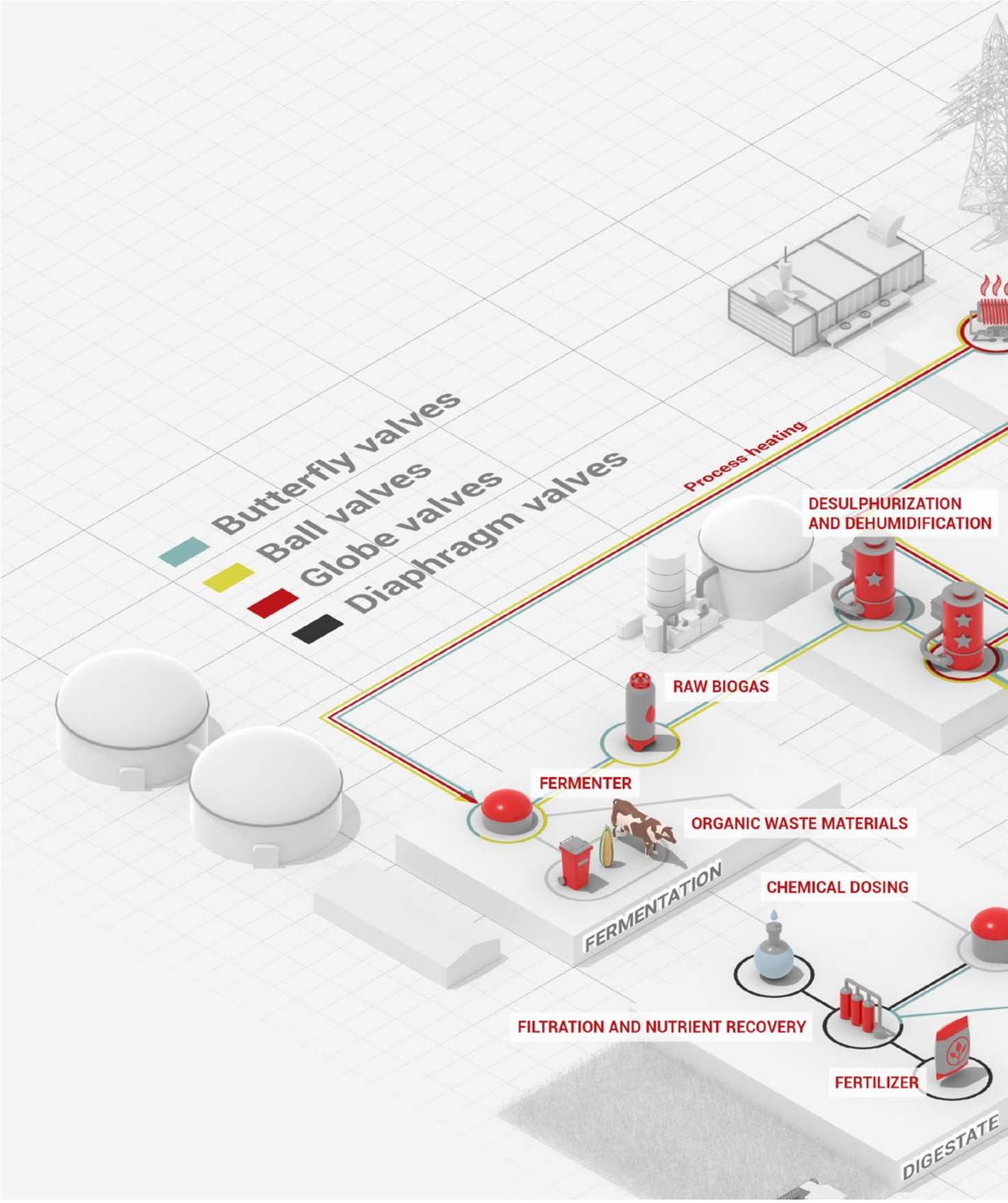

PROCESS HEATING
CURRENT
COMBINED HEAT AND POWER PLANT
POWER GENERATION
Energy for industrial processes and households
BIOMETHANE
CARBON DIOXIDE
CNG filling stations
GAS SCRUBBING
PRESSURE SWING ADSORPTION (PSA)
MEMBRANE PROCESS
BIOMETHANE TREATMENT
DESULPHURIZED BIOGAS
PRETREATMENT
CO_2 for industrial processes
DIGESTATE
WASTE WATER
TREATMENT

Procedures in biogas or biomethane treatment

Biogas purification often sees multiple procedures combined in order to get the most out of the respective treatment steps. For example, this includes desulphurization through absorption (activated charcoal), drying through cooling through pressure swing adsorption (zeolite) and the procedure for removing CO_2 explained further down.

Membrane separation process
Gas purification with polymer diaphragms adopts the different permeation properties of the gases. CO_2 and H_2S permeate through the diaphragms much more easily, and can thus be discharged. Biomethane is created as a product at a high level of purity.

Since diaphragm systems usually have multiple layers, different pressure ratings need to be observed when selecting valve designs. In addition to control valves, this procedure also includes many manual valves in the plants.

Gas scrubbers
Gas scrubbers can be operated with various media. In a pressurized water scrubber, the compressed biogas is cleaned with water. The CO_2 is physically separated in the water (absorption) and can be driven out into a second column at lower pressures (desorption). The water can then be fed back to the absorption column.
Shut-off valves are used for pumps and tanks as well as for draining, while control valves are used for volume flow regulation of water. In addition to water, polyglycols (Genosorb or Selexol) can also be used in physical gas scrubbing. In contrast to physical adsorption, the chemical bond to the medium can be used in amine scrubbing. Once the CO_2 has been absorbed, the medium is also regenerated (usually by increasing the temperature) and is returned to the absorption column after it has cooled down.

In addition to the valves for pumps and tanks for isolation and draining, control valves are used here for volume flow regulation of the medium and at the heat exchangers for temperature control.

Application	Special operating parameters and requirements	What you need to pay attention to when selecting valves
Gas scrubbers Flow control Temperature control	Desorption up to 100 °C, resistance to chemicals (amines or Genosorb®)	For water: Stainless steel bodies and EPDM seals For amines/Genosorb®: Stainless steel bodies and PTFE seals
Membrane separation process Pressure control	Up to 10 bar, ambient temperature	Cast bodies with NBR or PTFE seals, GEMÜ support for the precise configuration of control valves
PSA systems	Frequent cycle duties and sometimes a two-way flow	Often globe valves with actuators for high cycle duties. Suitable valve types for two-way flow include butterfly and diaphragm valves

Pressure swing adsorption via PSA systems
The functional principle, the basis of PSA systems, is adsorption followed by a pressure swing.

By transferring the gauge pressure between parallel adsorption tanks, continuous operation of the system is possible with high energy savings. During biomethane extraction, biogas flows into the purification tank (first tank). As a result, CO_2 is selectively adsorbed by the molecular sieves. Purified biomethane flows out. The second tank is regenerated (vented and flushed out), the CO_2 is released into the surrounding environment. For continuous operation, the two adsorption tanks are operated alternately between sorption (operation) and desorption (regeneration) cycles. Before a sorption cycle starts, a pressure swing is performed. From the saturated tank, the pressurized gas is transferred to the regenerated tank.

Typical requirements for valve designs are frequent cycle duties, sometimes at intervals of a minute. In the event of a pressure swing, some valves are also subject to two-way flow.

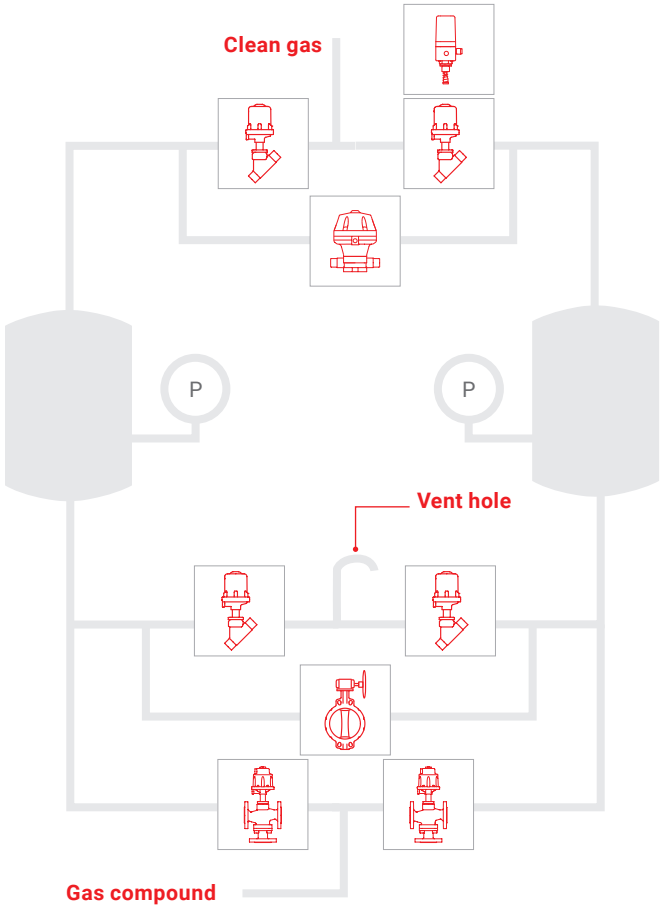

Why GEMÜ?

For valve designs in gas scrubbers, membrane separation processes or PSA systems, GEMÜ offers technically advanced solutions adjusted to each process step.

No matter whether robust globe valves for high switching cycles or modular systems for a particularly compact design are required.

Due to the versatile valve types and accessories, we deliver the complete valves, measurement and control systems from a single source.

For pneumatic actuators, our positioners and process controllers are mounted ex works, tested and delivered as an entire system. This means that you also save on the time and effort required for logistics and installation of the system on site, as well as for documentation.

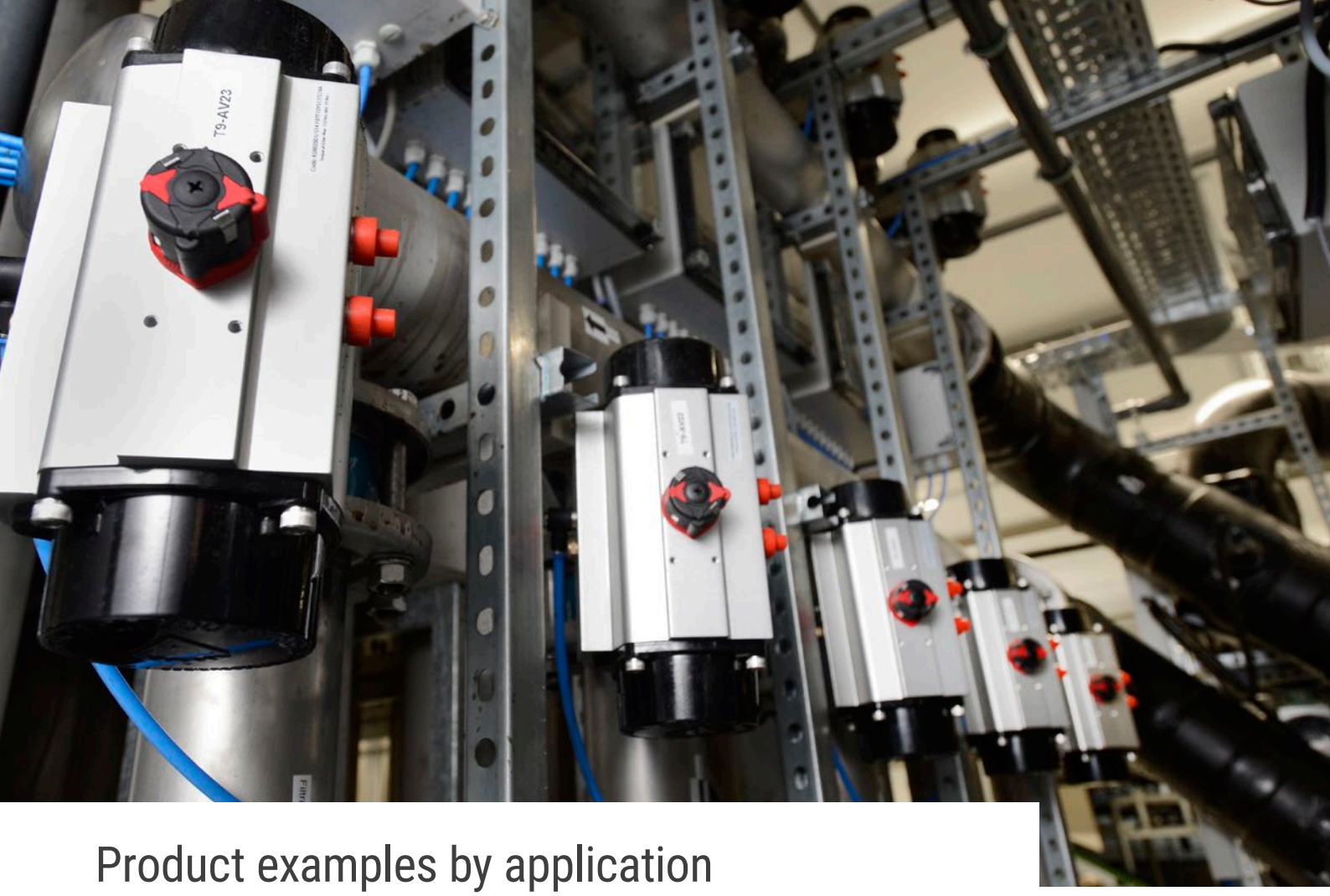

Product examples by application

No other area subjects valves to such a versatile range of requirements as those found in industrial applications. Our decades of application experience feed directly into the new and further development of valves. That's why, even in this demanding environment, GEMÜ valves have proven so very successful to date.

GEMÜ products are in use around the globe in water treatment and waste water treatment, the chemical industry, power generation and environmental systems, the industrial plant and machinery sectors, the paper industry, steel works, mining and metal extraction, surface finishing and in many other areas.
The specific product range includes diaphragm valves, globe and control valves, butterfly valves, ball valves and solenoid valves, each available in metal or plastic versions, as well as accessories for measurement and control systems. The wide field of applications makes GEMÜ valves reliable all-rounders. As customized system solutions, GEMÜ multi-port valve blocks in plastic and metal versions are being used successfully in industrial plant and process engineering.

Configure GEMÜ valves easily online

Go directly to the online product page using the web code

The web code consists of the abbreviation "GW-" and the respective product type. For example, the GEMÜ R690 diaphragm valve has the web code GW-R690. Enter the web code in the search frame on the GEMÜ website ***www.gemu-group.com*** and you will be taken straight to the associated product page. Alternatively, you can scan the QR code.

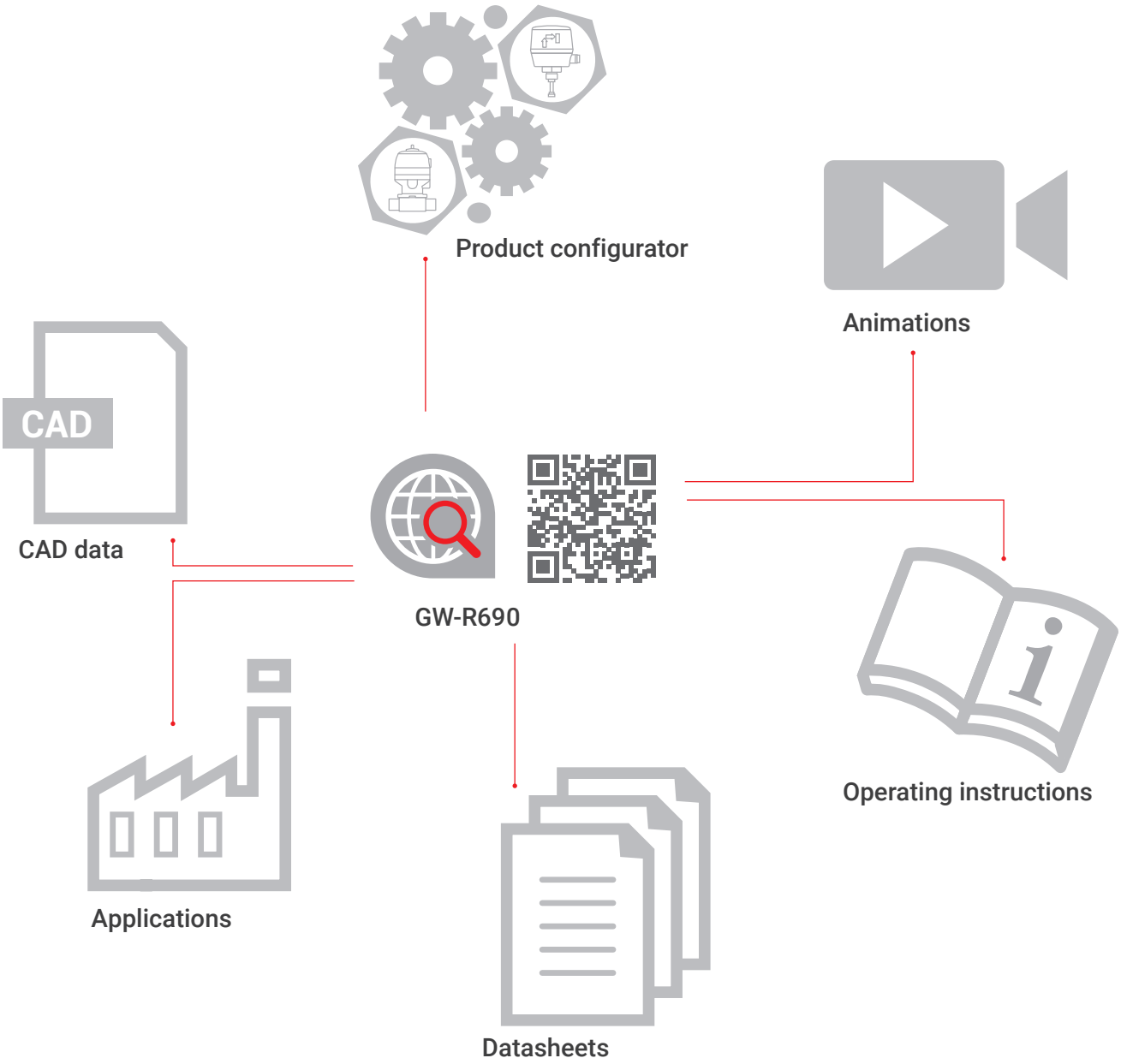

Butterfly valves made of metal

GEMÜ R470 Tugela and GEMÜ R480 Victoria

Thanks to the huge variety of materials, the GEMÜ butterfly valves are universally compatible. The construction enables many possible combinations of disc, liner and body. For all nominal sizes, butterfly valves are effective as short shut-off valves with high flow rate values. Various manual, pneumatic or motorized actuators are available for all GEMÜ butterfly valves.

Resistant
TFM sealing ring with excellent properties for chemical applications

Reliable
Clamping system for sealing with concentricity control ring

Wear-optimized
Protected spindle due to temperature resistant, copper alloy bush

High-quality
Spherical surfaces for improved mechanical behaviour under pressure and temperature fluctuations

Durable
Reduced friction of the disc due to double-eccentric structure

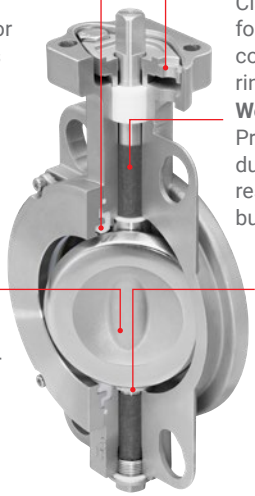

GEMÜ R470

Go online! GW-R470

Safety Integrity Level GEMÜ SIL

TA Luft (German Clean Air Act)

Durable
Lower torques due to PTFE-coated bushes

Made by GEMÜ
Narrow shape and positional tolerances and high-quality epoxy coatings thanks to in-house manufacturing capabilities

Smart
Liner material is easy to read when installed, compatible with CONEXO

Reliable
Optimized liner for technically flawless tightness

Flow-optimized
Sleek disc design for higher Kv values

GEMÜ R480 Victoria

Go online! GW-R480

DVGW CERT

Safety Integrity Level GEMÜ SIL

TA Luft (German Clean Air Act)

Hand lever also available in yellow

Areas of application

GEMÜ R470 Tugela, double-eccentric

- Pressure swing adsorption

GEMÜ R480 Victoria

- Biogas plant
- Pressurized water scrubbers
- Membrane processes
- Heating networks

Ball valves made of metal

GEMÜ B20, GEMÜ BB02 and GEMÜ BB06

Ball valves are versatile and can also be used in extreme circumstances. With the ball that has been drilled through as a shut-off body, this valve type is particularly well-suited to safely shutting off liquid and gaseous media at a very high operating pressure. As the medium travels between the ball and the body when opening and closing, ball valves are suitable for mechanically pure, inert or corrosive liquids, gases or steam.

Lockable
Manually operated and lockable

Compact
Length standardized to DIN EN 3202 M3

Lightweight
Low weight

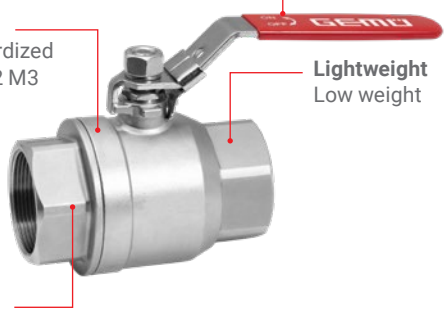

Flexible
Different standard connections DIN, NPT thread

Modular
Three-piece body design enables simple mounting

Flexible
Freely selectable, different actuators can be mounted

Automation-capable
ISO 5211 top flange for simple actuator mounting

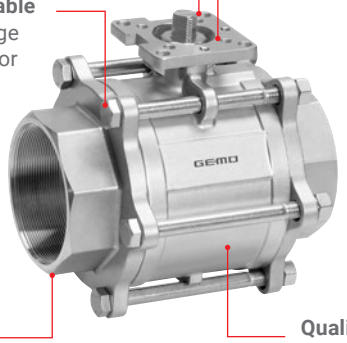

Variable
Different connection options, butt weld spigots in extended orbital welding design

Qualitative
Design to DIN 12516-2, ASME 16.34

GEMÜ B20

Go online! GW-B20

DVGW CERT

Safety Integrity Level GEMÜ SIL IEC 61508 / IEC 61511

Ex

TA Luft (German Clean Air Act)

GEMÜ BB02

Go online! GW-BB02

Safety Integrity Level GEMÜ SIL IEC 61508 / IEC 61511

Ex

TA Luft (German Clean Air Act)

Areas of application

- Biogas plant
- Membrane processes
- Gas scrubbers
- Heating networks

Also available as a compact flanged ball valve

GEMÜ BB06

Go online! GW-BB06

Safety Integrity Level GEMÜ SIL IEC 61508 / IEC 61511

Ex

TA Luft (German Clean Air Act)

Globe valves made of metal

GEMÜ 534 and GEMÜ 554

Globe valves are suitable for clean, liquid media as well as gases and steam. Due to the linear movement and favourable mechanical conditions, they often take on automated tasks like frequent cycle duties in PSA systems, and control tasks in cooling water and biogas regulation.

Robust
Standard gland packing suitable for vacuum up to 20 mbar

High-quality
Valve bodies available in SG iron and stainless steel

Optimized
Good flow capability and compact design

Also available as angle seat globe valve

GEMÜ 534

Go online! GW-534

Safety Integrity Level GEMÜ SIL

TA Luft (German Clean Air Act)

GEMÜ 554

Go online! GW-554

Safety Integrity Level GEMÜ SIL

TA Luft (German Clean Air Act)

Other versions:

GEMÜ 550 acc. to EN 161 based on special function G available for ordering. EN 161 is an extra approval for GAS.

Areas of application

- PSA system
- Membrane processes
- Gas scrubbers
- Heating networks

Modular distribution valve

GEMÜ 553

The modular GEMÜ 553 distribution valve comprises various globe valve modules. These can be equipped with manual, pneumatic or motorized actuators. The downstream media is isolated using a PTFE seal. The valve spindle is sealed by a self-adjusting gland packing. This provides a low-maintenance and reliable valve spindle sealing even after an extended operating time. The wiper ring that is installed upstream of the gland packing also protects this against contamination and damage. The single modules are simple to join via screws.

Advantages

- Simple to extend
- Versatile range of accessories
- Compact design
- Simple integration of sensor system
- Versatile adaptation options
- Outlets can be turned in steps of 90°
- Filters or separation of media can be integrated

GEMÜ 553

Go online!
GW-553

Configuration example

Modular distribution valve

GEMÜ 553

The GEMÜ P500M stainless steel valve block comprises two or more globe valves. These can be equipped with manual, pneumatic and motorized actuators. The downstream media is isolated using a valve plug.

Advantages

- Space savings due to compact design
- Individual, customized and flexible design
- Fewer connection points and weld seams
- Most varied functions combined in the smallest of spaces
- Very suitable for control applications
- Actuators, gland packing and automation components can be used from the tried and tested GEMÜ modular system

GEMÜ P500M

Go online!
GW-P500M

Globe valves as control valves

Thanks to the long stroke distance, combined simultaneously with the low cross-section increase at the valve seat, GEMÜ globe valves are optimally suited to control tasks. Moreover, they are distinguished by jolt-free actuation and a long service life in terms of switching frequency.

This is how a globe valve becomes a control valve

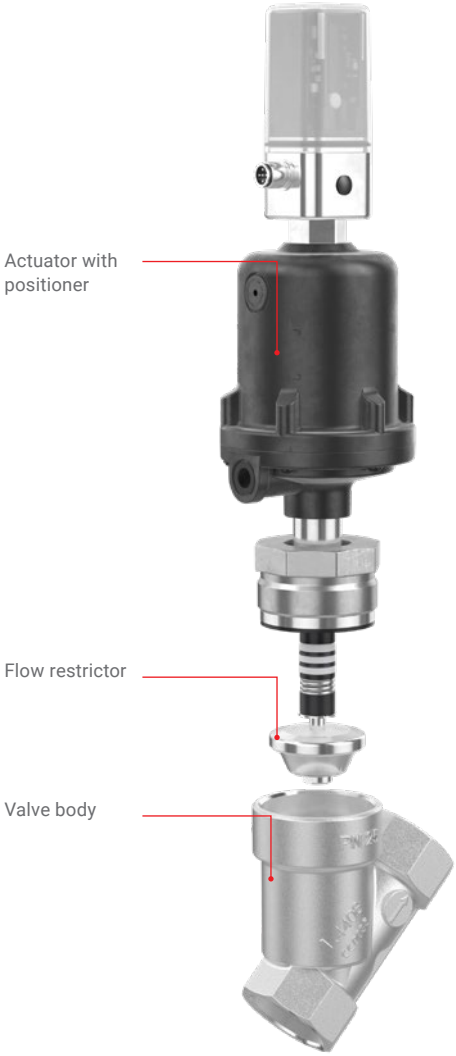

The wrong design of control valves can result in poor control results or premature wear. This is why GEMÜ places particular importance on the precise design of the control valves.
Our technical advisors and specification sheet can help you to design control valves.

Flow restrictors with different geometries

With opening of the valve to an increasing degree, the flow restrictor changes the ring-shaped gap at the valve seat within a defined control characteristic. Depending on the type of globe valve and the nominal size, flow restrictors may feature the most varied geometries.

Regulating needles are used for very small nominal sizes and high pressures because they can control with high precision. For larger diameters, modified regulating cones or regulating cages are preferred for weight reasons.

The most frequently used control characteristics are linear and equal-percentage 1:25 and 1:50. Linear means that the flow increases linearly with the opening stroke of the valve. The flow is 50% at the 50% open valve position. This provides good valve control over the total stroke range. The equal-percentage control characteristics have the character of an exponential function. In the lower range, with an opening stroke of approx. 20% to 60%, these valves can be very finely controlled depending on the valve stroke.

Regulating needle

Regulating cone

Regulating cage

Overview of control systems

Pneumatic

GEMÜ PCS 514

GEMÜ PCS 550

GEMÜ PCS 554

GEMÜ PCS 530

GEMÜ PCS 532

GEMÜ PCS 534

GEMÜ PCS 536

Electrical

533 eSyStep

543 eSyStep

539 eSyDrive

549 eSyDrive

343 eSyDrive

For pneumatic actuators, our positioners and process controllers are mounted ex works and tested and delivered as an entire system. Not only can you obtain all components from a single source, you simultaneously reduce the effort required for logistics and installation of the system on site, as well as for documentation.

For motorized actuators, the controller is mostly fully integrated. These actuators are an optimal alternative to control valves in sterile environments or when considering service life.
If required, the respective positioner can also be commissioned at the place of use by GEMÜ service engineers.

Diaphragm valves in plastic and metal

GEMÜ 695 and GEMÜ R690

The diaphragm valve is practically the all-rounder amongst valves. One of its major advantages is that only two components come into contact with the working medium – the diaphragm and the valve body. The media wetted inner geometry is designed to keep flow turbulences as low as possible, and there is almost no opportunity for product deposits or sediment.

Position indicator
Integrated as standard

Optimized cleanability
Thanks to rounded actuator cover

RFID retainer
For integration into CONEXO system

Bolting from below
For protection against contamination

Also available as plastic version

Operating pressure of 10 bar
For EPDM and PTFE diaphragms (diaphragm sizes 25 to 50)

Solid control air bush
Made of brass

GEMÜ 695

Go online! GW-695

TA Luft
(German Clean Air Act)

GEMÜ R690

Go online! GW-R690

Areas of application

GEMÜ 695

- PSA system
- Digestate treatment (pressure and temperature)
- Gas scrubbers

GEMÜ R690

- Digestate treatment (chemical dosing)

Further process accessories

GEMÜ 1434 µPos
positioner

GEMÜ 1435 ePos
positioner

GEMÜ 1436 cPos
positioner

GEMÜ 1441
positioner

GEMÜ LSF
inductive dual sensor

GEMÜ LSC
imit switch box

For linear valves

For quarter turn valves

GEMÜ 514
angle seat globe valve

GEMÜ R690
diaphragm valve

GEMÜ B46
ball valve

GEMÜ R481
butterfly valve

GEMÜ 805
flowmeter

GEMÜ 3140 and 3240 pressure
and temperature sensors

GEMÜ 8253
solenoid valve

GEMÜ ZRSK
check valve

GEMÜ portfolio at a glance

The following table aims to give you an overview of which valve function is most appropriate for which processes and media. In addition to these categories, we also offer valves for special applications.

Criterion	Diaphragm valves		Globe valves	Butterfly valves	
	Metal	Plastic	Metal	Metal	Plastic
MEDIUM					
Gaseous	○	○	●	●	–
Steam	○	–	●	●	–
Liquid	●	●	●	●	●
Viscous	●	●	○	●	●
Particulate, abrasive	●	○	–	○	●
Granular	○	○	–	○	●
Corrosive (depends on material)	●	●	–	–	●
PROCESS					
Multi-port design available	●	●	●	–	–
Piggable	–	–	–	–	–
Controllable	○	○	●	For larger diameters	
Media temperature	Up to 100 °C	Up to 80 °C	Up to 185 °C	Up to 230 °C	Up to 90 °C
Operating pressure	Up to 10 bar	Up to 10 bar	Up to 40 bar	Up to 40 bar	Up to 10 bar
Frequent cycle duties	○	○	●	–	–

* Higher levels on request
● Very suitable
○ Conditionally suitable
– Not suitable

Further process accessories

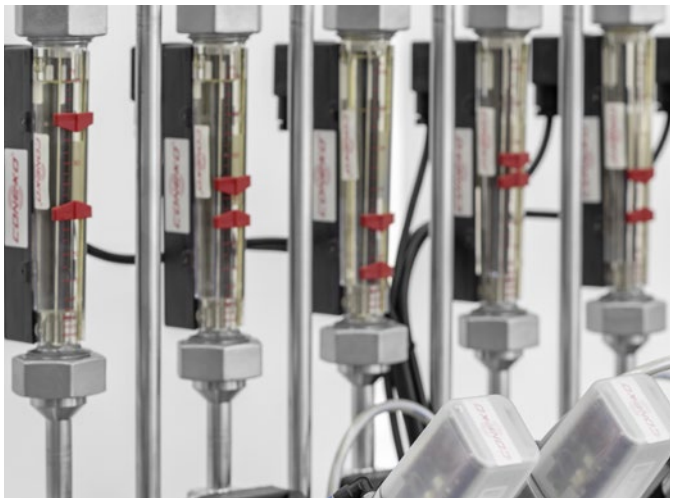

Flowmeters

Pressure and temperature sensors

Criterion	Ball valves		Diaphragm globe valves	Process solenoid valves	
	Metal	Plastic	Plastic	Metal	Plastic
MEDIUM					
Gaseous	●	●	●	–	–
Steam	●	●	●	–	–
Liquid	●	●	●	●	●
Viscous	●	●	●	●	●
Particulate, abrasive	–	–	–	–	–
Granular	–	–	–	–	–
Corrosive (depends on material)	–	●	●	–	●
PROCESS					
Multi-port design available	●	●	●	●	–
Piggable	●	●	–	–	–
Controllable	●	–	●	–	–
Media temperature	Up to 220 °C	Up to 100 °C	Up to 150 °C	Up to 60 °C	Up to 60 °C
Operating pressure	Up to 137 bar	Up to 16 bar	Up to 6 bar	Up to 20 bar	Up to 6 bar
Frequent cycle duties	–	–	●	●	●

* Higher levels on request
● Very suitable
○ Conditionally suitable
– Not suitable

Control systems

Keeping up with the current of time – electrical valves for plant engineering

Electrification is changing the processing industry and, in doing so, is offering versatile options for optimizing plant engineering. For compact plants or local plants without a separate compressed air supply, electrical valves can be an energy-efficient alternative to pneumatics.

For more than 55 years, we have been developing electromagnetic and motorized actuators, thereby continuously building up our expertise.

GEMÜ eSyDrive
Premium actuator for complex Open/Closed and dynamic control applications

GEMÜ eSyStep
Universal actuator for Open/Closed and simple control applications

GEMÜ eSyLite
Basic actuator for Open/Closed applications

More on our electrical actuators for linear and quarter turn valves can be found at **www.gemu-group.com/electric-valves**

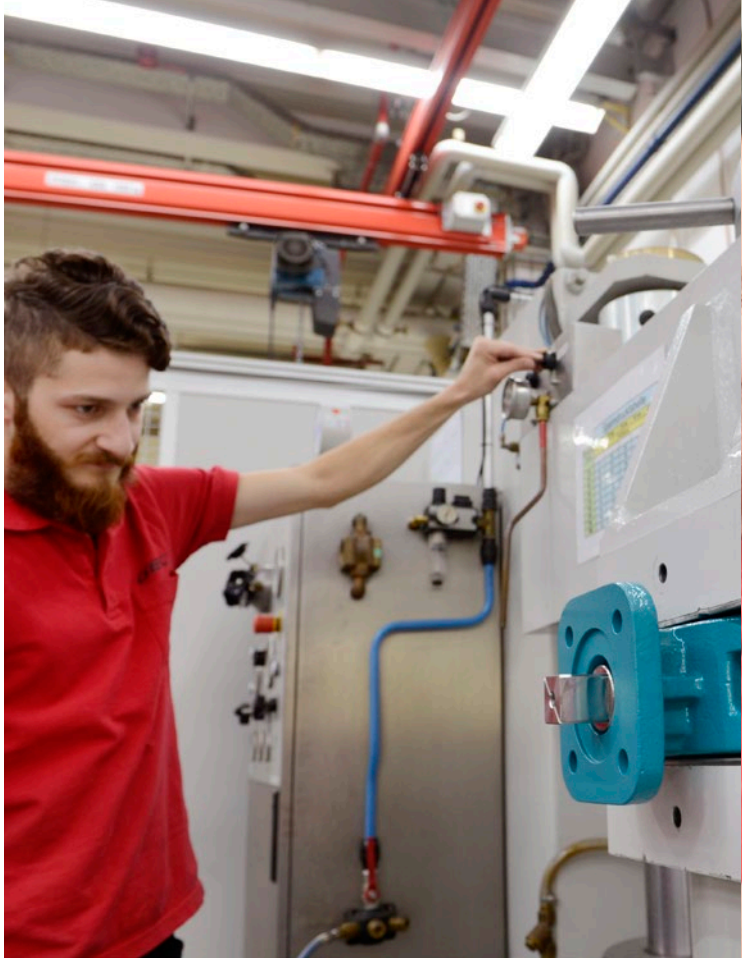

Process reliability due to tested quality

If you value high quality, in-house quality assurance is a must. That's why the GEMÜ test laboratory is equipped with state-of-the-art measuring equipment to allow comprehensive testing of our products. This also enables us to test the performance of highly customized designs in order to determine the parameters for the most cost effective operation.

At GEMÜ, we only use carefully selected materials and our quality management system ensures continuous monitoring. External institutes also testify to this quality.

TÜVRheinland® CERT ISO 14001

TÜVRheinland® CERT ISO 9001

DVGW CERT

Safety Integrity Level GEMÜ SIL IEC 61508 / IEC 61511

TA Luft (German Clean Air Act)

Customized solutions

As a partner to its customers, GEMÜ would like you to be able to fully utilize your plant potential. That's why we also offer high-grade modifications right up to customized valve concepts on a case by case basis, in addition to our standard range.

Whether it concerns a modification or a new development, our modular system with proven standard modules allows plenty of flexibility for design possibilities on a case by case basis.

Extensive standard range
With a wide choice of operating principles, materials and connection standards

Product modification
Application-optimized such as special coatings or extended material selection

New development
In close collaboration between customers and experienced GEMÜ engineers

GEMÜ app
Numerous functions in one mobile application

Take a step with us into a mobile era!
Discover the new GEMÜ app – with numerous functions that simplify your life. The complete GEMÜ product range will also be available with immediate effect – from the convenience of your pocket. With our app for smartphones and tablets, you can call up product information anywhere and benefit from our digital services.

Advantages
- Product documentation on all GEMÜ products can be downloaded while you're on the go
- Call up item-specific information without spending a long time searching
- Clear identification of GEMÜ products with QR code or RFID tag
- Convenient operation and configuration for GEMÜ products with Bluetooth interface
- Quick and easy way to get in touch

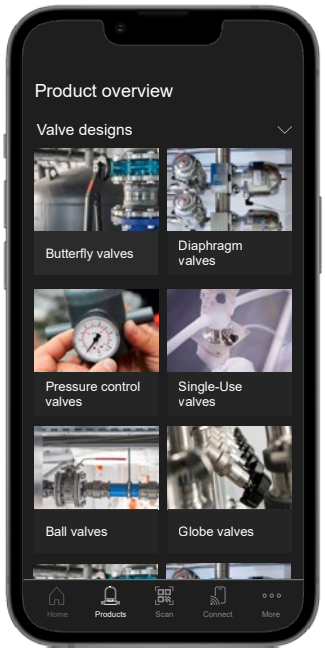

CONEXO
Digital information management and maintenance support

In addition to clear identification of components, CONEXO also offers support with the qualification of plants and paperless maintenance. Identification is done via an RFID chip using the CONEXO pen or via a QR code with CONEXO Webview and the GEMÜ app directly on the component within the plant.

Identification
- Electronic identification of components using CONEXO tags (QR code or RFID chip)
- Scanning the CONEXO tag
- Displaying the product information and documentation

Documentation
- Construction of the plant structure on the CONEXO portal
- Integration of the component data
- Creation of step-by-step instructions for each maintenance type
- Definition of the maintenance tasks with location, cycle, implementation period and operator

Maintenance support
- Implementation of maintenance work via step-by-step instructions
- Automatic documentation of implementation
- Electronic signature through user login
- Distribution of the maintenance report via PDF
- Calling up the maintenance report

Digital name plate
Since mid-2021, in addition to the normal product label, GEMÜ products have gradually also included an additional label with a QR code and serial number. You can use this to positively identify our products all over the world and, in addition to the classic product label, call up lots of additional product-related information in digital format.

GEMÜ Gebr. Müller Apparatebau GmbH & Co. KG
Fritz-Müller-Straße 6–8 · 74653 Ingelfingen · Germany
Phone +49 (0) 7940 123 0 · info@gemue.de

www.gemu-group.com

Subject to alteration · 10/2024 · 88892783