GEMÜ SU60 SUMONDO

Motorized actuator for Single-Use valves

EN **Operating instructions**

webcode: GW-SU60

All rights including copyrights or industrial property rights are expressly reserved.

Keep the document for future reference.

© GEMÜ Gebr. Müller Apparatebau GmbH & Co. KG
15.10.2026

Contents

1 General information 4
1.1 Information 4
1.2 Symbols used 4
1.3 Definition of terms 4
1.4 Warning notes 4
2 Safety information 5
3 Product description 5
3.1 Construction 5
3.2 Description 8
3.3 Function 8
3.4 Product label 8
3.4.1 Actuator 8
3.4.2 Valve body packaging 8
4 Correct use 8
5 Order data 9
5.1 SU60 motorized actuator 9
5.2 Diaphragm valve body SUB 10
6 Technical data 11
6.1 Medium 11
6.2 Temperature 11
6.3 Pressure 11
6.4 Product conformity 13
6.5 Mechanical data 13
6.6 Electrical data 14
7 Dimensions 17
7.1 Actuator dimensions 17
7.2 Body dimensions 18
7.3 Connection dimensions 21
8 Electrical connection 22
9 Manufacturer's information 23
9.1 Delivery 23
9.2 Packaging 23
9.3 Transport 23
9.4 Storage 23
10 Installation in piping 23
10.1 Preparing for installation 23
10.2 Assembling the motorized actuator in the housing 24
10.3 Disassembling the motorized stainless steel actuator – housing 25
10.4 Assembling the single-use diaphragm valve body on the motorized stainless steel actuator 26
10.5 Disassembling the single-use diaphragm valve body – motorized stainless steel actuator 26
10.6 Installing the single-use diaphragm valve body in the piping 26
11 Network connection 27
11.1 Network settings 27
11.2 Connecting the network 27
11.3 Resetting the network settings 27
12 Commissioning 28
12.1 Commissioning on the device 28
12.2 Commissioning via the eSy-Web web interface 28
12.3 Commissioning via digital input 28
13 Operation 28
13.1 Manual override 28
13.2 Operation on the device 29
13.3 Operation via the web server 29
14 Error messages 30
14.1 LED error messages 30
14.2 Troubleshooting 31
15 Inspection and maintenance 33
16 Removal from piping 33
17 Disposal 33
18 Returns 34
19 Declaration of Incorporation according to 2006/42/EC (Machinery Directive) 35
20 Manufacturer's declaration according to 2014/68/EU (Pressure Equipment Directive) 36
21 Declaration of conformity according to 2014/30/EU (EMC Directive) 37

1 General information

1.1 Information

- The descriptions and instructions apply to the standard versions. For special versions not described in this document the basic information contained herein applies in combination with any additional special documentation.
- Correct installation, operation, maintenance and repair work ensure faultless operation of the product.
- Should there be any doubts or misunderstandings, the German version is the authoritative document.
- Contact us at the address on the last page for staff training information.

1.2 Symbols used

The following symbols are used in this document:

Symbol	Meaning
●	Tasks to be performed
▶	Response(s) to tasks
–	Lists

The following LED symbols are used in the documentation:

Symbol	LED conditions
○	Off
●	Lit (on)
☀	Flashing

1.3 Definition of terms

Working medium

The medium that flows through the GEMÜ product.

1.4 Warning notes

Wherever possible, warning notes are organised according to the following scheme:

SIGNAL WORD	
Possible symbol for the specific danger	Type and source of the danger ▶Possible consequences of non-observance. ●Measures for avoiding danger.

Warning notes are always marked with a signal word and sometimes also with a symbol for the specific danger.

The following signal words and danger levels are used:

⚠ DANGER

Imminent danger!

▶ Non-observance can cause death or severe injury.

⚠ WARNING

Potentially dangerous situation!

▶ Non-observance can cause death or severe injury.

⚠ CAUTION

Potentially dangerous situation!

▶ Non-observance can cause moderate to light injury.

NOTICE

Potentially dangerous situation!

▶ Non-observance can cause damage to property.

The following symbols for the specific dangers can be used within a warning note:

Symbol	Meaning
	Danger - corrosive materials
	Risk posed by sharp edges
	Danger from potentially explosive atmosphere

2 Safety information

The safety information in this document refers only to an individual product. Potentially dangerous conditions can arise in combination with other plant components, which need to be considered on the basis of a risk analysis. The operator is responsible for the production of the risk analysis and for compliance with the resulting precautionary measures and regional safety regulations.

The document contains fundamental safety information that must be observed during commissioning, operation and maintenance. Non-compliance with these instructions may cause:

- Personal hazard due to electrical, mechanical and chemical effects
- Hazard to nearby equipment
- Failure of important functions
- Hazard to the environment due to the leakage of dangerous materials

The safety information does not take into account:

- Unexpected incidents and events, which may occur during installation, operation and maintenance
- Local safety regulations which must be adhered to by the operator and by any additional installation personnel

Prior to commissioning:

1. Transport and store the product correctly.
2. Do not paint the bolts and plastic parts of the product.
3. Carry out installation and commissioning using trained personnel.
4. Provide adequate training for installation and operating personnel.
5. Ensure that the contents of the document have been fully understood by the responsible personnel.
6. Define the areas of responsibility.
7. Observe the safety data sheets.
8. Observe the safety regulations for the media used.

During operation:

1. Keep this document available at the place of use.
2. Observe the safety information.
3. Operate the product in accordance with this document.
4. Operate the product in accordance with the specifications.
5. Maintain the product correctly.
6. Do not carry out any maintenance work and repairs not described in this document without consulting the manufacturer first.

In cases of uncertainty:

1. Consult the nearest GEMÜ sales office.

3 Product description

3.1 Construction

3.1.1 Valve assembly construction

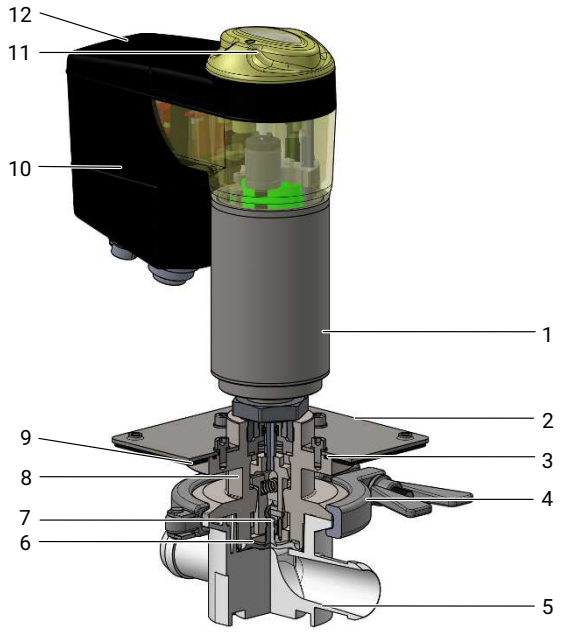

Item	Name	Materials
1	Actuator base	1.4301
2	Mounting flange	Stainless steel
3	O-ring	EPDM
4	Clamping device	Stainless steel
5	Valve body	PP-R
6	Diaphragm	TPE
7	Diaphragm pin	PP-R
8	Distance piece	Stainless steel
9	Gasket	EPDM, angular
10	Actuator housing	PC
11	Cover with high visibility LED, manual override and on-site control	PC
12	Actuator top	PC black

3.1.2 Buttons for on-site control

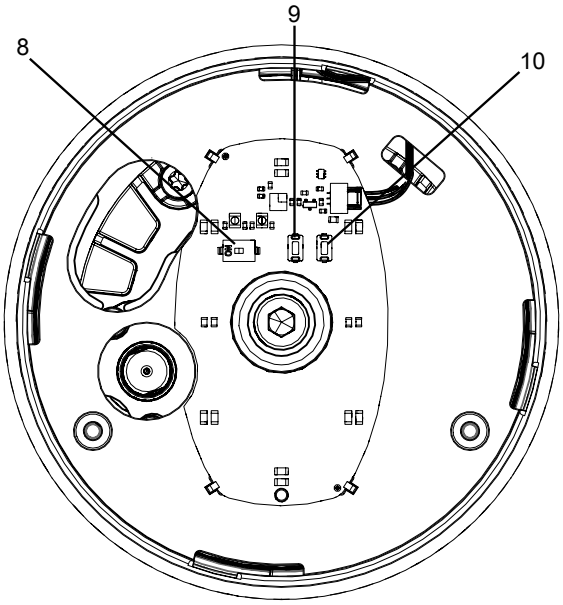

Fig. 1: Position of the buttons

Item	Name	Function
8	DIP switch, "ON-site" control	Switches the on-site control on the device on or off
9	"OPEN" button	Moves actuator to the open position Resets the network settings
10	"INIT/CLOSE" button	Moves actuator to the closed position Starting initialisation

3.1.3 LED displays

3.1.3.1 On-site status LEDs

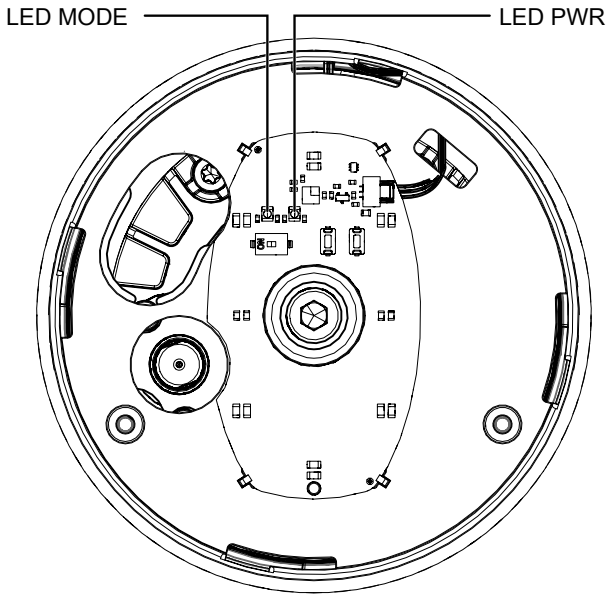

Fig. 2: Position of the status LEDs

The user checks the following conditions directly on-site at the valve using LED MODE and LED PWR:

Function	LED MODE		LED PWR	
	Yellow	Blue	Green	Red
Automatic operation	●	○	●	○
Manual operation	✳	○	●	○
Actuator switched off (OFF mode)	○	○	●	○
Manual operation (on-site)	○	●	●	○
Software update	✳ alternating	✳ alternating	●	○
On-site initialisation (buttons)	○	✳	●	○
Remote initialisation (via DigIn)	●	○	●	○

Function	LED MODE		LED PWR	
	Yellow	Blue	Green	Red
Operation via emergency power supply module			●	

3.1.3.2 High visibility LEDs

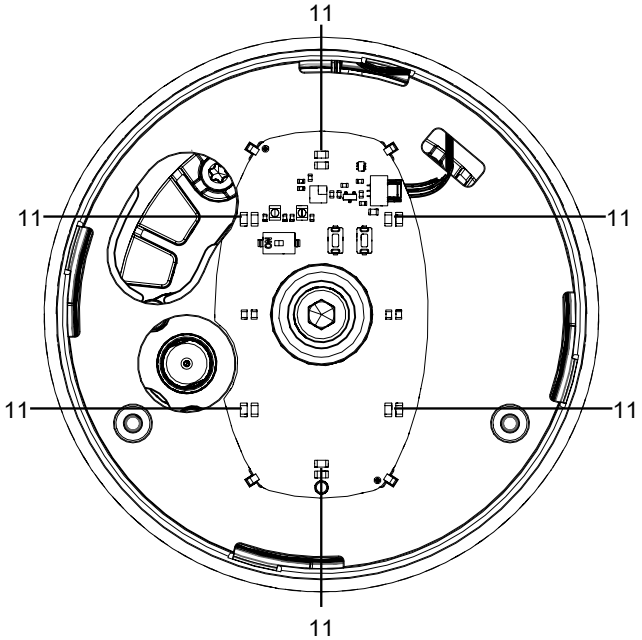

Fig. 3: Position of the high visibility LEDs

Item	Name
11	High visibility LEDs

Function		High visibility LED	
		green	orange
OPEN position	Position indicator LEDs standard	○	●
OPEN position	Position indicator LEDs inversed	●	○
CLOSED position	Position indicator LEDs standard	●	○
CLOSED position	Position indicator LEDs inversed	○	●
Position unknown	(e.g. 50%)	○	○

Function	High visibility LED	
	green	orange
Initialization	●	●
	alternating	
Location function	●	○

3.1.4 LED messages

Error	Possible cause	Troubleshooting
LED 1 and 2 are flashing yellow and red simultaneously High visibility LED flashes orange	Internal error	Contact GEMÜ
LED 1 flashes yellow LED 2 lights up red High visibility LED flashes orange	Actual value signal outside of the area	Check actual value signal Check precise error description using the eSy-Web web interface
LED 1 is not lit LED2 is flashing red High visibility LED flashes orange	No initialisation	Initialise valve
LED 1 and 2 are flashing yellow and red simultaneously High visibility LED flashes orange	No calibration	Contact GEMÜ
LED 1 lights up yellow LED 2 lights up red High visibility LED flashes orange	Set value signal outside of the area	Check set value signal Check precise error description using the eSy-Web web interface
LED 1 lights up yellow LED 2 flashes red High visibility LED flashes orange	Temperature error	Check temperature Allow device to cool down Check precise error description using the eSy-Web web interface
LED 1 is not lit LED 2 lights up red High visibility LED flashes orange	Supply voltage too low	Check supply voltage Check precise error description using the eSy-Web web interface

3.2 Description

The GEMÜ SU60 SUMONDO motorized hollow shaft actuator is based on technology that does not use brushes or sensors and therefore guarantees high performance and a long service life. Thanks to its integrated positioner and process controller, the actuator is not only ideal for OPEN/CLOSE applications, but also for variable and complex control applications. The actuator is joined to the media wetted GEMÜ SUB unit, comprising a valve body and welded sealing diaphragm, by means of a clamp connection. After use, the media wetted GEMÜ SUB unit can easily be disconnected from the actuator and replaced. The actuator remains in the plant.

3.3 Function

The product, consisting of the SUB single-use diaphragm valve and the SU60 motorized actuator, is designed for use in single-use systems in plastic pipe and hose lines.

The product controls or regulates (depending on version) a flowing medium by being closed or opened by a motorized actuator.

The product has an optical position indicator as standard. The optical position indicator indicates the OPEN and CLOSED positions.

3.4 Product label

3.4.1 Actuator

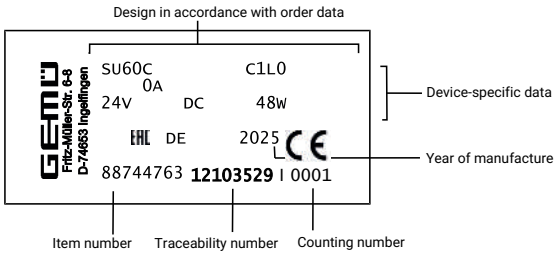

3.4.2 Valve body packaging

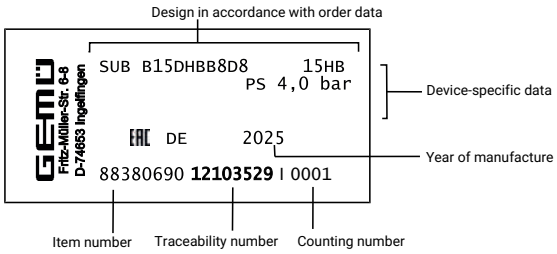

4 Correct use

⚠ DANGER

Danger of explosion!

- ▶ Risk of death or severe injury
- ● Do **not** use the product in potentially explosive zones.

⚠ WARNING

Improper use of the product!

- ▶ Risk of severe injury or death
- ▶ Manufacturer liability and guarantee will be void.
- ● Only use the product in accordance with the operating conditions specified in the contract documentation and in this document.

The product is designed for installation in piping systems and for controlling a working medium.

The product is not intended for use in potentially explosive areas.

- ● Use the product in accordance with the technical data.

5 Order data

The order data provide an overview of standard configurations.

Please check the availability before ordering. Other configurations available on request.

Because the actuator remains in the plant, there is a complete SUMONDO valve consisting of the SU60 motorized actuator (with distance piece and clamping device) and the SUB diaphragm valve body (with a fixed internally welded diaphragm).

5.1 SU60 motorized actuator

Order codes

1 Type	Code
Single-use actuator, motorized metal version	SU60

2 Diaphragm size	Code
Diaphragm size B	B
Diaphragm size C	C
Diaphragm size D	D

3 Diaphragm mounting	Code
Pin	G

4 Voltage/Frequency	Code
24 V DC	C1

5 Control module	Code
OPEN/CLOSE, positioner and process controller	L0

6 Actuator version	Code
Actuator size 0	0A

Order example SU60

Ordering option	Code	Description
1 Type	SU60	Single-use actuator, motorized metal version
2 Diaphragm size	B	Diaphragm size B
3 Diaphragm mounting	G	Pin
4 Voltage/Frequency	C1	24 V DC
5 Control module	L0	OPEN/CLOSE, positioner and process controller
6 Actuator size	0A	Actuator size 0

5.2 Diaphragm valve body SUB

Order codes

1 Type	Code
Single-use body	SUB

2 Diaphragm size	Code
Diaphragm size B	B
Diaphragm size C	C
Diaphragm size D	D

3 Connection size 1	Code
DN 8 (1/4")	8
DN 10 (3/8")	10
DN 15 (1/2")	15
DN 20 (3/4")	20
DN 25 (1")	25

4 Body configuration	Code
2/2-way body	D
Angle valve body, right	R
T body	T

5 Connection	Code
Clamp connection similar to ASME-BPE	CA
Hose barb	HB

6 Body material	Code
PP-R, natural	B8

7 Diaphragm material	Code
TPE	K8

8 Connection size 2	Code
1/4" (DN 8)	8
3/8" (DN 10)	10
1/2" (DN 15)	15
3/4" (DN 20)	20
1" (DN 25)	25

9 Connection of spigot 2	Code
Clamp connection similar to ASME-BPE	CA
Hose barb	HB

Order example SUB

Ordering option	Code	Description
1 Type	SUB	Single-use body
2 Diaphragm size	B	Diaphragm size B
3 Connection size 1	10	DN 10 (3/8")
4 Body configuration	T	T body
5 Connection	HB	Hose barb
6 Body material	B8	PP-R, natural
7 Diaphragm material	K8	TPE
8 Connection size 2	10	3/8" (DN 10)
9 Connection of spigot 2	HB	Hose barb

6 Technical data

6.1 Medium

Working medium: Corrosive, inert, liquid media which have no negative impact on the physical and chemical properties of the body and diaphragm material.

6.2 Temperature

Media temperature: 5 — 40 °C

Ambient temperature: 0 — 40 °C

Storage temperature: 0 — 40 °C

6.3 Pressure

Operating pressure: 0 – 4.9 bar (Diaphragm size code B, C),
0 – 4.5 bar (Diaphragm size code D)

6.3.1 Kv values

AG [1]	MG	Connection type code [2]	Body configuration code [3]	Kv value [m³/h]	Cv value [US-gpm]
8	**B**	**HB**	**D**	0.47	0.55
10		**HB**	**D**	1.08	1.26
			T	1.03	1.21
			R	1.02	1.19
15		**HB**	**D**	1.59	1.86
			T	1.47	1.72
			R	1.44	1.68
15	**C**	**HB**	**D**	2.17	2.54
20		**HB**	**D**	3.29	3.85
			T	2.15	2.52
		CA	**D**	3.29	3.85
			T	2.15	2.52
25		**HB**	**D**	4.55	5.32
			T	3.81	4.46
		CA	**D**	4.55	5.32
			T	3.81	4.46
20	**D**	**CA, HB**	**D**	9.21	10.78
25		**CA, HB**	**D**	12.19	14.26

AG = connection size
MG = diaphragm size
Kv values determined based on DIN EN 60534-2-3:1998 standard, inlet pressure 4 bar, Δp 1 bar
The Kv values for other product configurations (e.g. other diaphragm or body materials) may differ. In general, all diaphragms are subject to the influences of pressure and temperature from the process. Therefore the Kv values may exceed the tolerance limits of the standard.

1) **Connection size 1**
   Code 8: DN 8 (1/4")
   Code 10: DN 10 (3/8")
   Code 15: DN 15 (1/2")
   Code 20: DN 20 (3/4")
   Code 25: DN 25 (1")

2) **Connection**
   Code CA: Clamp connection similar to ASME-BPE
   Code HB: Hose barb

3) **Body configuration**
   Code D: 2/2-way body
   Code R: Angle valve body, right
   Code T: T body

6.4 Product conformity

NOTICE

Certifications

▶ The certifications only apply to the diaphragms and valve bodies (medium wetted parts) and **not** the actuator.

Certifications:
- USP Bacterial Endotoxins Test, USP <85>
- USP Biological Reactivity Test in vitro, USP <87>
- USP Biological Reactivity Tests in vivo for Class VI, USP <88>
- USP Physicochemical Tests for Plastics, USP <661>
- USP Particulate Matter in Injections, USP <788>, USP <790>
- Validation guide on request

Machinery Directive: 2006/42/EC

Pressure Equipment Directive: 2014/68/EU

EMC Directive: 2014/30/EU

6.5 Mechanical data

Service life:

Diaphragm valve body (SUB): 100.000 switching cycles (according to GEMÜ product validation) or max. 5 years from production date (2 years before sterilization/3 years after sterilization)

Protection class: Protection class IP 65 acc. to EN 60529

Actuating speed: Adjustable, max. 6 mm/s

Weight:

Body

Type	Connection Code 1)	Body configuration Code 2)	MG B			MG C			MG D	
			1/4" (DN 8)	3/8" (DN 10)	1/2" (DN 15)	1/2" (DN 15)	3/4" (DN 20)	1" (DN 25)	3/4" (DN 20)	1" (DN 25)
SUB	**HB**	**D**	108.0	107.0	111.0	91.0	174.0	181.0	80.0	80.0
		T	-	109.0	114.0	-	179.0	192.0	-	-
		R	-	107.0	113.0	-	-	-	-	-
	CA	**D**	-	-	-	-	97.0	100.0	99.0	100.0
		T	-	-	-	-	111.0	112.0	-	-

Weight in g, MG = diaphragm size

1) **Connection**
Code CA: Clamp connection similar to ASME-BPE
Code HB: Hose barb

2) **Body configuration**
Code D: 2/2-way body
Code R: Angle valve body, right
Code T: T body

Complete unit (actuator, distance piece and body)

MG	Weight
B	3.9
C	4.0
D	4.1

Weights in kg

6.6 Electrical data

Supply voltage:

	Actuator size 0
Voltage	Uv = 24 V DC ± 10%
Power	Max. 14 W
Operating mode (OPEN/CLOSED operation)	Continuous duty
Operating mode (control operation)	Class C acc. to EN 15714-2
Reverse battery protection	Yes

6.6.1 Analogue input signals

6.6.1.1 Set value

Input signal: 0/4 - 20 mA; 0 – 10 V DC (selectable using software)

Input type: passive

Input resistance: 250 Ω

Accuracy/linearity: ≤ ±0.3% of full flow

Temperature drift: ≤ ±0.1% / 10°K

Resolution: 12 bit

Reverse battery protection: No

Overload proof: Yes (up to ± 24 V DC)

6.6.1.2 Process actual value

Input signal: 0/4 - 20 mA; 0 – 10 V DC (selectable using software)

Input type: passive

Input resistance: 250 Ω

Accuracy/linearity: ≤ ±0.3% of full flow

Temperature drift: ≤ ±0.1% / 10°K

Resolution: 12 bit

Reverse battery protection: No

Overload proof: Yes (up to ± 24 V DC)

6.6.2 Digital input signals

Digital inputs:	3
Function:	Can be selected using software
Voltage:	24 V DC
Logic level "1":	>14 V DC
Logic level "0":	< 8 V DC
Input current:	typ. 2.5 mA (at 24 V DC)

6.6.3 Analogue output signals

6.6.3.1 Actual value

Output signal:	0/4 - 20 mA; 0 – 10 V DC (selectable using software)
Output type:	Active (AD5412)
Accuracy:	≤ ±1% of full flow
Temperature drift:	≤ ±0.1% / 10°K
Load resistor:	≤ 750 kΩ
Resolution:	10 bit
Overload proof:	Yes (up to ± 24 V DC)
Short-circuit proof:	Yes

6.6.4 Digital output signals

6.6.4.1 Switching outputs 1 and 2

Design:	2x change-over contact, potential-free
Switch rating:	max. 48 V DC / 48 V AC
Switch points:	Adjustable 0 - 100 %

6.6.4.2 Switching output 3

Function:	Signal fault
Type of contact:	Push-Pull
Switching voltage:	Supply voltage
Switching current:	≤ 0.1 A
Drop voltage:	Max. 2.5 V DC at 0.1 A
Overload proof:	Yes (up to ± 24 V DC)
Short-circuit proof:	Yes
Pull-Down resistance:	120 kΩ

6.6.5 eSy-Web communication

Interface: Ethernet

Function: Parameterisation via web browser

IP address: 192.168.2.1 alterable via web browser

Subnet screen: 255.255.252.0 alterable via web browser

The actuator and the PC must be in the same network to use the web server. The IP address of the actuator is entered in the web browser and the actuator can then be parametrised. In order to use more than one actuator, a definitive IP address must be assigned to each actuator in the same network.

6.6.6 Modbus TCP communication

Interface: Modbus TCP

IP address: 192.168.2.1 alterable via web browser

Subnet screen: 255.255.252.0 alterable via web browser

Port: 502

Supported function codes:

Code Dezimal	Code Hex	Function
3	0x03	Read Holding Registers
4	0x04	Read Input Registers
6	0x06	Write Single Register
16	0x10	Write Multiple Registers
23	0x17	Read / Write Multiple Registers

7 Dimensions

7.1 Actuator dimensions

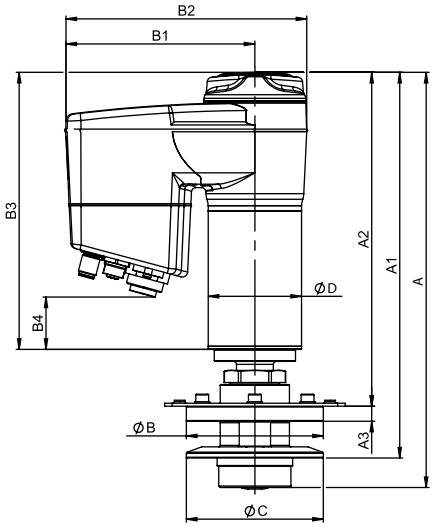

MG	DN	A	A1	A2	A3	ØB	B1	B2	B3	B4	ØC	ØD
B	**1/4" (DN 8), 1/2" (DN 15)**	274.6	269.5	232.1	10.0	91.0	125.5	160.0	184.1	34.7	64.0	62.0
C	**3/4" (DN 20), 1" (DN 25)**	275.9	256.3	221.9	10.0	91.0	125.5	160.0	184.1	34.7	91.0	62.0
D	**3/4" (DN 20), 1" (DN 25)**	272.9	249.1	210.3	10.0	91.0	125.5	160.0	184.1	34.7	91.0	62.0

Dimensions in mm, MG = diaphragm size

7.2 Body dimensions

7.2.1 Angle valve body, right (code R)

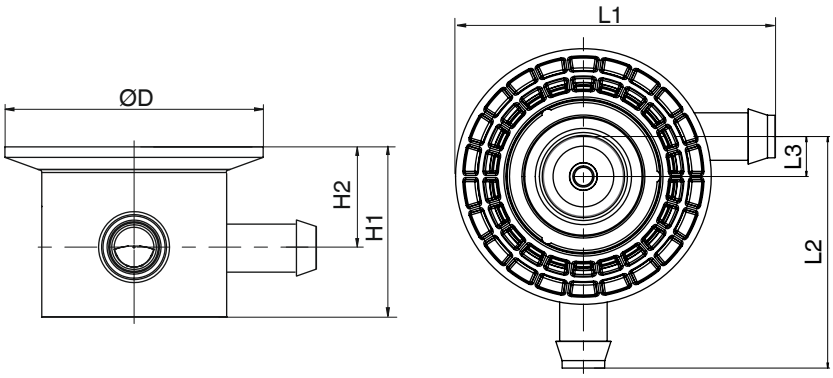

Connection type hose barb (code HB)

MG	DN	øD	H1	H2	L1	L2	L3
B	**3/8" (DN 10)**	64.0	33.3	22.3	48.0	58.0	10.0
	1/2" (DN 15)	64.0	33.3	22.3	55.8	66.8	10.0

Dimensions in mm, MG = diaphragm size

7.2.2 2/2-way body (code D)

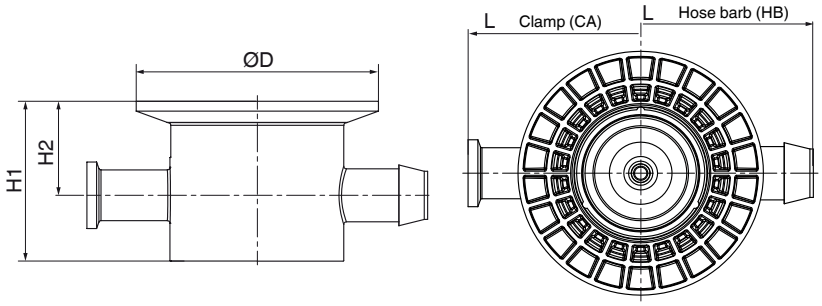

Connection type clamp (code CA) [1)]

MG	DN	øD	H1	H2	L
C	**3/4"(DN 20)**	91.0	60.0	35.3	128.0
	1"(DN 25)	91.0	60.0	35.3	137.4
D	**3/4"(DN 20)**	91.6	58.5	38.0	134.6
	1"(DN 25)	91.6	58.5	39.5	134.6

Connection type hose barb (code HB) [1)]

MG	DN	øD	H1	H2	L
B	**1/4" (DN 8)**	64.0	33.3	22.3	80.6
	3/8" (DN 10)	64.0	33.3	22.3	95.9
	1/2" (DN 15)	64.0	33.3	22.3	111.5
C	**1/2" (DN 15)**	91.0	60.0	35.3	126.0
	3/4" (DN 20)	91.0	60.0	35.3	128.0
	1" (DN 25)	91.0	60.0	35.3	140.0
D	**3/4" (DN 20)**	91.6	58.5	38.0	139.0
	1" (DN 25)	91.6	58.5	39.5	139.0

Dimensions in mm, MG = diaphragm size

1) **Connection**
Code CA: Clamp connection similar to ASME-BPE
Code HB: Hose barb

7.2.3 T valve body (code T)

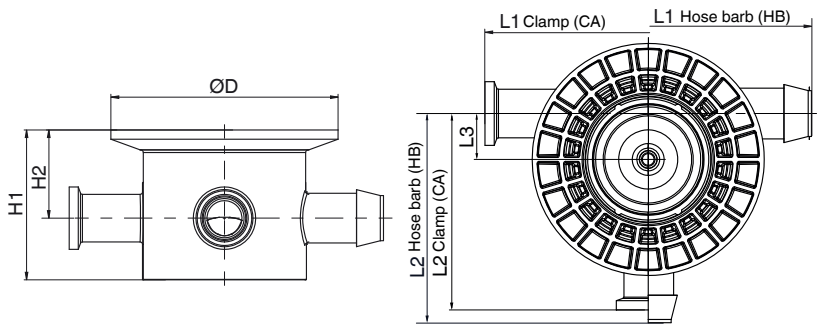

Connection type clamp (code CA) [1)]

MG	DN	ØD	H1	H2	L1	L2	L3
C	**3/4" (DN 20)**	91.0	60.0	35.3	128.0	82.0	18.0
	1" (DN 25)	91.0	60.0	35.3	137.4	82.0	18.0

Connection type hose barb (code HB) [1)]

MG	DN	ØD	H1	H2	L1	L2	L3
B	**3/8" (DN 10)**	64.0	33.3	22.3	96.0	58.0	10.0
	1/2" (DN 15)	64.0	33.3	22.3	111.5	65.8	10.0
C	**3/4" (DN 20)**	91.0	60.0	35.3	128.0	82.0	18.0
	1" (DN 25)	91.0	60.0	35.3	140.0	88.0	18.0

Dimensions in mm, MG = diaphragm size

1) **Connection**
Code CA: Clamp connection similar to ASME-BPE
Code HB: Hose barb

7.3 Connection dimensions

7.3.1 Clamp (code CA)

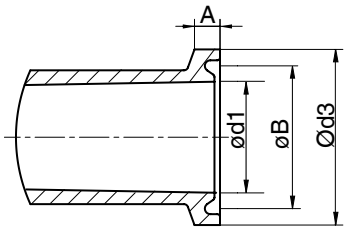

MG	DN	A	øB	ød1	ød3
C	**3/4" (DN 20)**	3.6	21.9	15.75	25.0
	1" (DN 25)	3.6	31.0	22.1	34.0
D	**3/4" (DN 20)**	2.85	43.4	19.05	50.5
	1" (DN 25)	2.85	43.4	25.4	50.5

Dimensions in mm, MG = diaphragm size
Tolerance ± 0.2 mm

7.3.2 Hose barb (code HB)

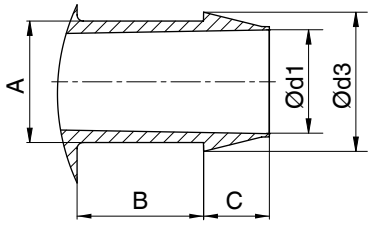

MG	DN	A	B	C	ød1	ød3
B	**1/4" (DN 8)**	7.9	10.6	4.5	5.9	9.3
	3/8" (DN 10)	11.9	16.0	6.7	9.4	13.8
	1/2" (DN 15)	15.9	21.4	9.1	12.6	18.8
C	**1/2" (DN 15)**	15.9	21.4	9.1	12.6	18.8
	3/4" (DN 20)	19.9	20.7	10.8	17.0	22.8
	1" (DN 25)	28.0	24.7	11.5	25.3	30.8
D	**3/4" (DN 20)**	22.0	21.4	7.5	19.0	25.0
	1" (DN 25)	28.0	22.2	11.5	25.4	30.8

Dimensions in mm, MG = diaphragm size
Tolerance ± 0.2 mm

8 Electrical connection

NOTICE

Appropriate cable socket/appropriate mating connector!

- ▶ The appropriate cable socket and/or appropriate mating connector is included for X1, X3 and X4.
- ▶ The appropriate mating connector is **not** included for X2.

NOTICE

Damage to unused plugs due to penetration of humidity!

- ▶ Unused plugs must be covered with the protective caps supplied with the product to ensure IP protection.

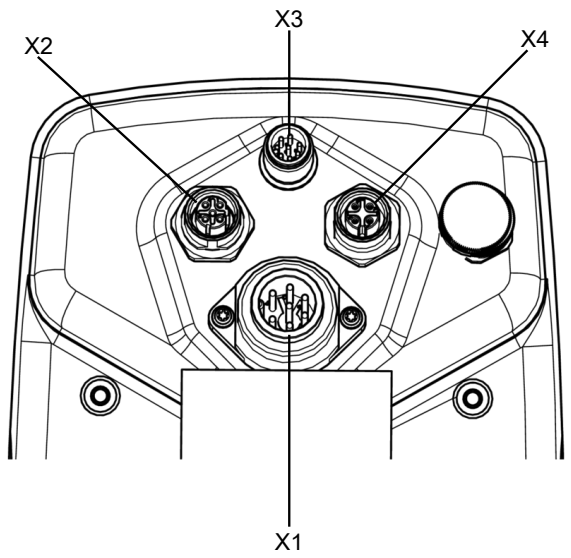

Fig. 4: Overview of electrical connections

8.1 Connection X1

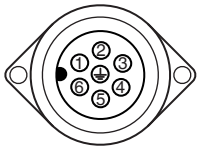

7-pin plug, Binder, type 693

Pin	Signal name
Pin 1	Uv, 24 V DC supply voltage
Pin 2	Uv GND
Pin 3	Relay output K1, common
Pin 4	Relay output K1, make contact
Pin 5	Relay output K2, common
Pin 6	Relay output K2, make contact
Pin PE	Function earth

8.2 Connection X2

5-pin M12 built-in socket, D-coded

Pin	Signal name
Pin 1	Tx + (Ethernet)
Pin 2	Rx + (Ethernet)
Pin 3	Tx - (Ethernet)
Pin 4	Rx - (Ethernet)
Pin 5	Shield

8.3 Connection X3

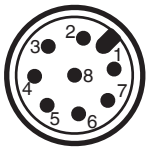

8-pin M12 plug, A-coded

Pin	Signal name
Pin 1	W+ set value input
Pin 2	W – set value input
Pin 3	X + actual value output
Pin 4	GND (actual value output, digital input 1 – 3, error message output)
Pin 5	Error message output 24 V DC
Pin 6	Digital input 3
Pin 7	Digital input 1
Pin 8	Digital input 2

8.4 Connection X4

4-pin M12 built-in socket, A-coded

Pin	Signal name
Pin 1	UV, 24 V DC actual value supply
Pin 2	n.c.
Pin 3	GND (actual value supply, actual value input)
Pin 4	X+, process actual value input
Pin 5	n.c.

8.5 Connecting the valve electrically

1. Protect the electrical connections from direct contact with rain water.
2. Lay the cables and pipework so that neither condensate nor rain water can get into the plug unions.
3. Check that all plug cable glands and fittings are mechanically secured.
   ⇨ The cable must be held firmly on all sides.
4. Check whether the actuator cover/manual override is closed and undamaged.
5. Correctly close the actuator cover/manual override again immediately after use (see “Manual override“, page 28).

9 Manufacturer's information

9.1 Delivery

- Check that all parts are present and check for any damage immediately upon receipt.

The product's performance is tested at the factory. The scope of delivery is apparent from the dispatch documents and the design from the order number.

9.2 Packaging

The product is packaged in a cardboard box which can be recycled as paper.

9.3 Transport

1. Only transport the product by suitable means. Do not drop. Handle carefully.
2. After the installation dispose of transport packaging material according to relevant local or national disposal regulations / environmental protection laws.

9.4 Storage

1. Store the product free from dust and moisture in its original packaging.
2. Avoid UV rays and direct sunlight.
3. Do not exceed the maximum storage temperature (see chapter "Technical data").
4. Do not store solvents, chemicals, acids, fuels or similar fluids in the same room as GEMÜ products and their spare parts.
5. Close the compressed air connections with protection caps or sealing plugs.

10 Installation in piping

10.1 Preparing for installation

⚠ WARNING

The equipment is subject to pressure!
- ▶ Risk of severe injury or death
- Depressurize the plant or plant component.
- Completely drain the plant or plant component.

⚠ WARNING

The actuator cover is under spring pressure!
- ▶ Risk of severe injury or death!
- Do not open the actuator.

⚠ WARNING

Corrosive chemicals!
- ▶ Risk of caustic burns
- Wear appropriate protective gear.
- Completely drain the plant.

⚠ CAUTION

Sharp edges
- ▶ Risk of cuts!
- Wear protective gloves.

⚠ CAUTION

Use as step!
- ▶ Damage to the product
- ▶ Risk of slipping-off
- Choose the installation location so that the product cannot be used as a foothold.
- Do not use the product as a step or a foothold.

⚠ CAUTION

Maximum permissible pressure exceeded!
- ▶ Damage to the product!
- Provide for precautionary measures against exceeding the maximum permissible pressure that may be caused by pressure surges (water hammer).

⚠ CAUTION

Leakage!
- ▶ Emission of dangerous materials
- Provide for precautionary measures against exceeding the maximum permissible pressure that may be caused by pressure surges (water hammer).

⚠ CAUTION

Only apply media pressure to the single-use diaphragm valve body when it is mounted on the motorized actuator.

▶ Otherwise the single-use diaphragm valve body may be damaged.

NOTICE

Suitability of the product!

▶ The product must be appropriate for the piping system operating conditions (medium, medium concentration, temperature and pressure) and the prevailing ambient conditions.

NOTICE

Tools!

▶ The tools required for installation and assembly are not included in the scope of delivery.

● Use appropriate, functional and safe tools.

1. Ensure the product is suitable for the relevant application.
2. Check the technical data of the product and the materials.
3. Keep appropriate tools ready.
4. Use appropriate protective gear as specified in the plant operator's guidelines.
5. Observe appropriate regulations for connections.
6. Have installation work carried out by trained personnel.
7. Shut off plant or plant component.
8. Secure the plant or plant component against recommissioning.
9. Depressurize the plant or plant component.
10. Completely drain the plant or plant component and allow it to cool down until the temperature is below the media vaporization temperature and cannot cause scalding.
11. Correctly decontaminate, rinse and ventilate the plant or plant component.
12. Lay piping so that the product is protected against transverse and bending forces, and also from vibrations and tension.
13. Only install the product between matching aligned pipes.
14. Optional installation position.

10.2 Assembling the motorized actuator in the housing

⚠ CAUTION

▶ The motorized actuators **A** are supplied with a mounting plate **4** as standard.

▶ **Do not remove the mounting plate 4.**

▶ Otherwise the manufacturer liability and guarantee will be void.

NOTICE

▶ **Maximum thickness of the housing 5:** 10 mm

Rework the housing before assembling the motorized actuator **A** according to the borehole pattern below, so that the actuator's mounting plate **4** can be screwed on from above or from the inside of the housing.

Preparation of the housing 5

1. Push the actuator on the clamp side from the inside through the prepared plate opening of the housing (prepared by the customer) as far as it will go (mounting plate).

   ⇨ Take care to ensure that the seal supplied with the product is correctly positioned. For example, the seal prevents dust and cleaning fluids from penetrating inside the customer's unit.

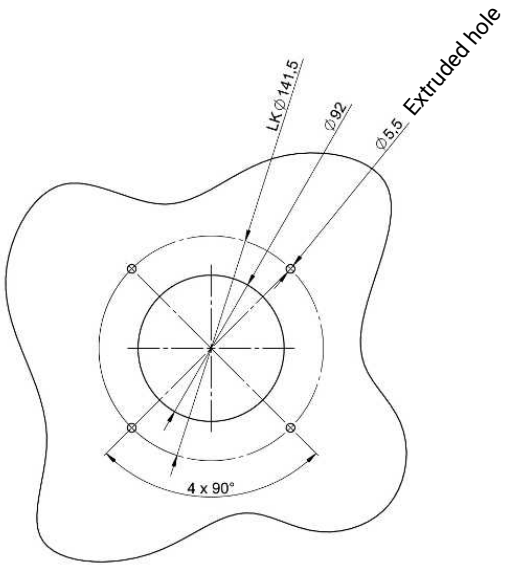

Fig. 5: Borehole pattern for housing (housing not included)

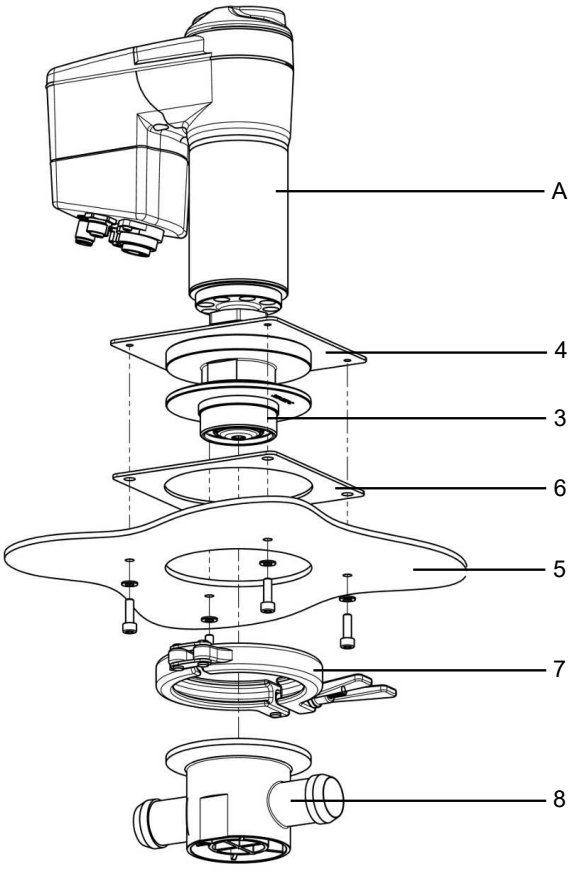

Fig. 6: Assembling the pneumatic stainless steel actuator in the housing

2. The mounting plate **4** of the motorized actuator **A** must lie flush on the housing **5**.
3. Connect the mounting plate **4** and housing **5** using suitable bolts and washers (not included in the scope of delivery).
4. Make the electrical connection (see “Electrical connection“, page 22).

10.3 Disassembling the motorized stainless steel actuator – housing

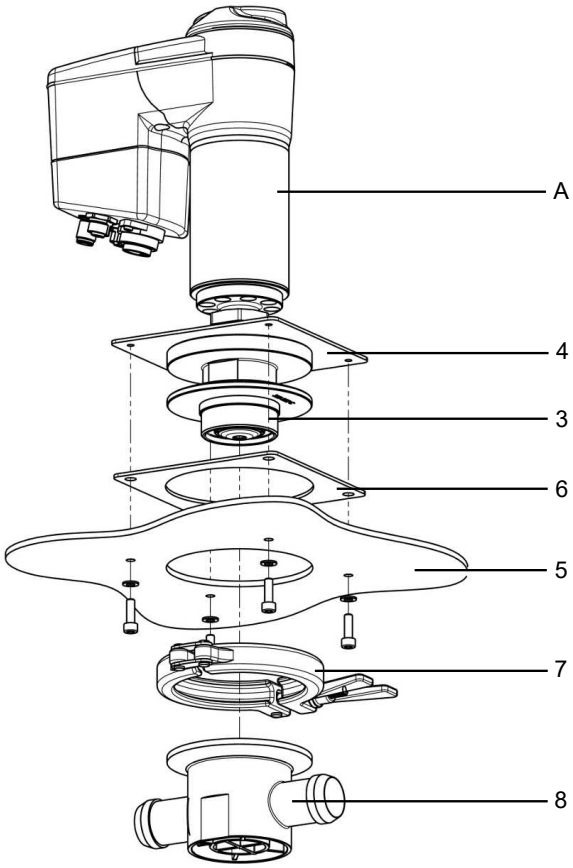

Fig. 7: Disassembling the pneumatic stainless steel actuator – housing

1. Remove the single-use diaphragm valve body 8 (see “Disassembling the single-use diaphragm valve body – motorized stainless steel actuator“, page 26).
2. Disconnect the electrical connection.
3. Undo the bolts between the mounting plate **4** and the housing **5**.
4. Pull the motorized actuator **A** inwards through the recess of the housing **5** (in the direction of the actuator housing).

10.4 Assembling the single-use diaphragm valve body on the motorized stainless steel actuator

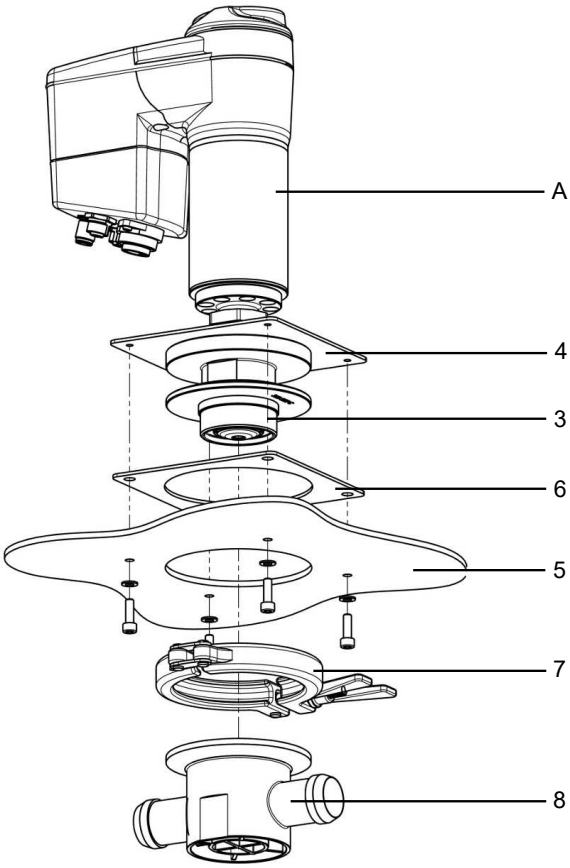

1. Move motorized actuator A to the open position (see “Moving the valve to the open position“, page 29).
2. Place the single-use diaphragm valve body **8** on the distance piece **3** so that the diaphragm pin **10** is inserted into the compressor of the motorized actuator **A**.
3. Firmly compress the distance piece **3** and single-use diaphragm valve body **8** with a clamp **7** (tightening torque: 4 Nm).
4. Move motorized actuator A to the closed position (see “Moving the valve to the closed position“, page 29).
   ⇨ Closing the valve will cause the diaphragm pin to automatically engage in the compressor.
5. Perform initialization (actuator moves 2x open/closed) (see “Commissioning on the device“, page 28).

⇨ The system is now ready for use.

10.5 Disassembling the single-use diaphragm valve body – motorized stainless steel actuator

⚠ CAUTION	
	Risk of damaging the single-use diaphragm valve body during disassembly. ▶ Depressurize the plant before disassembly. ▶ The single-use diaphragm valve body 1 cannot be used after disassembly.

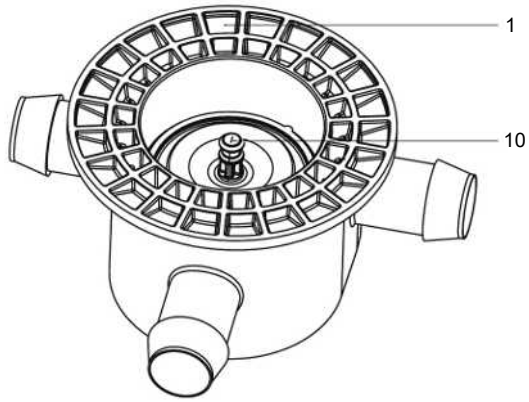

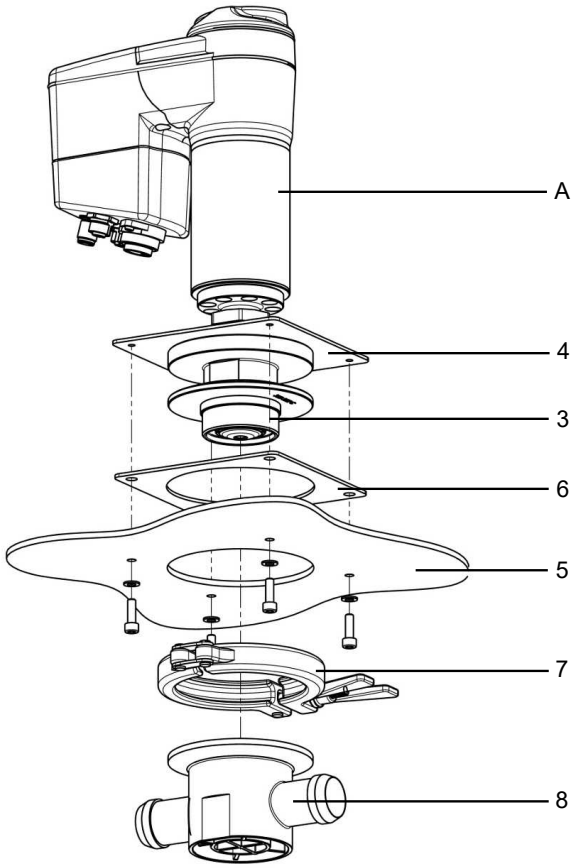

1. Move motorized actuator **A** to the open position.
2. Remove the clamp **7**.
3. Move motorized actuator **A** to the closed position.
4. Pull the single-use diaphragm valve body **8** downwards.

⇨ The single-use diaphragm valve body is now disassembled.

10.6 Installing the single-use diaphragm valve body in the piping

NOTICE
▶ The single-use diaphragm valve body can only be used once and must be disposed of after use.

Installation - Clamp connections:

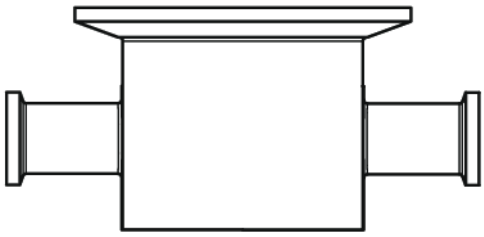

1. When installing the clamp connection, insert a gasket between the single-use diaphragm valve body clamp and the adjacent pipe connection and join them using the clamp. The gasket and the clamps are not included in the scope of delivery.

Installation - Hose barbs:

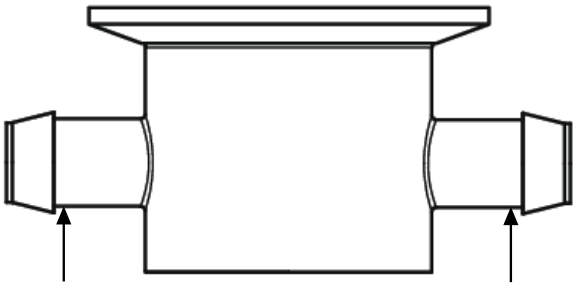

2. When installing the hose barbs, pull hoses (e.g. made of silicone) over the hose barbs.
3. Mount and fasten cable ties or hose clips behind the hose barbs (arrows).

After installation:

Re-attach or reactivate all safety and protective devices.

Check and ensure the tightness of the connection points.

11 Network connection

11.1 Network settings

The network interface has the following default settings:

IP address: 192.168.2.1

Subnet screen: 255.255.252.0

The default settings can be changed. See the eSy-Web operating instructions.

11.2 Connecting the network

1. Connect the network plug and cables with the electrical connection X2 of the product.
2. Change the IP address using the web server.

11.3 Resetting the network settings

1. Ensure that the "ON-Site" DIP switch **8** is not in the "ON" position.
2. Press and hold down the "OPEN" button **9** for at least 8 s.
   ⇨ LED 1 flashes fast in blue.
3. Press the "INIT/CLOSE" button **10**.
   ⇨ Network settings are reset in the default settings.

12 Commissioning

⚠ WARNING

Corrosive chemicals!

- ▶ Risk of caustic burns
- ● Wear appropriate protective gear.
- ● Completely drain the plant.

⚠ CAUTION

Leakage!

- ▶ Emission of dangerous materials
- ● Provide for precautionary measures against exceeding the maximum permissible pressure that may be caused by pressure surges (water hammer).

The operator must

1. ensure that the permissible pressure in the plant is adhered to.
2. carry out tests to ensure compatibility of materials and medium prior to commissioning.
3. assemble the product and the motorized actuator prior to commissioning.

12.1 Commissioning on the device

1. Ensure that the "ON-Site" DIP switch 8 is not in the "ON" position (see “Buttons for on-site control“, page 6).
2. Press and hold down the "INIT/CLOSE" button **10** for at least 8 s.
   ⇨ Initialization of the actuator begins.
3. Green and orange LEDs flash alternately.
   ⇨ Initialization is completed.

⇨ Commissioning is completed.

12.2 Commissioning via the eSy-Web web interface

- ● See separate eSy-Web operating instructions.

12.3 Commissioning via digital input

✓ The function of input 3 is set to init.

1. Apply 24 V DC signal briefly (max. 2 s) to connection X3 pin 6 (reference GND connection X3 pin 4).
   ⇨ Initialization of the actuator begins.
2. Green and orange LEDs flash alternately.
   ⇨ Initialization is completed.

⇨ Commissioning is completed.

13 Operation

⚠ CAUTION

Risk of crushing!

- ▶ Risk of severe injury. The guide piece is accessible when the housing cover is removed, posing a risk of crushing by the guide piece when the actuator moves.
- ● Operation, maintenance, inspection and assembly must only be performed by qualified and trained personnel.

⚠ CAUTION

Risk of crushing!

- ▶ Risk of severe injury. Contact with the threaded spindle is possible on the base of the actuator, posing a risk of crushing by the threaded spindle when the actuator moves.
- ● Operation, maintenance, inspection and assembly must only be performed by qualified and trained personnel.

13.1 Manual override

⚠ WARNING

Rotating cover!

- ▶ Risk of crushing
- ● Disconnect the power supply before using the manual override.

1. Disconnect the power supply.
2. Turn housing cover **3** clockwise.
3. Remove housing cover **3**.

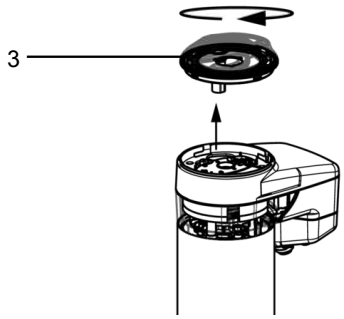

4. Place the actuator of housing cover **12** in the starting point for manual override.

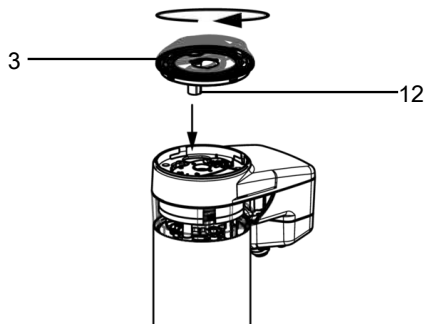

Item	Name
3	Housing cover
12	Housing cover actuator

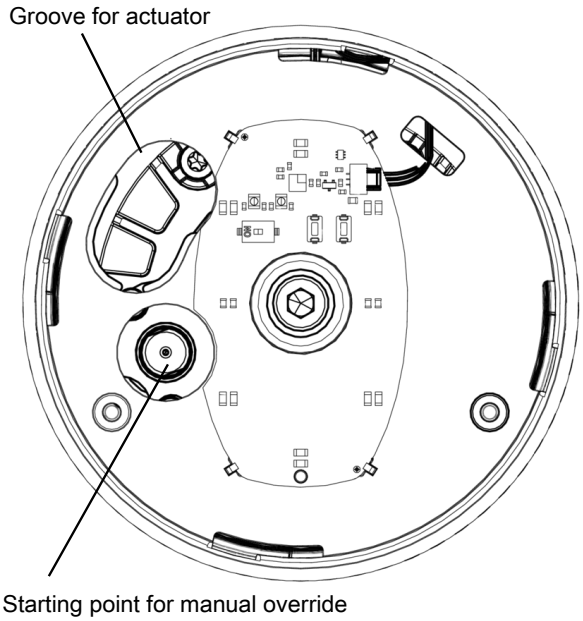

5. Turn housing cover **3** anticlockwise.

⇨ The product opens.

6. Turn housing cover **3** clockwise.

⇨ The product closes.

7. Pull manual override off the starting point.
8. Ensure correct positioning of the O-ring.
9. Push actuator **12** into the groove provided for this purpose.
10. Turn housing cover **3** anticlockwise until it stops.

⇨ Housing cover is closed.

11. Reconnect the power supply.

13.2 Operation on the device

13.2.1 Moving the valve to the open position

1. Move "ON-Site" DIP switch 8 to the "ON" position (see “Buttons for on-site control“, page 6).
   ⇨ Control on the device is activated.
2. Press "OPEN" button **9**.
   ⇨ The valve moves slowly to the open position.
3. Also press "INIT/CLOSE" button **10**.
   ⇨ The valve moves quickly to the open position.
   ⇨ If the valve is fully opened, the high visibility LEDs are lit in green.
4. Move "ON-Site" DIP switch **8** to the "OFF" position.
   ⇨ Control on the device is deactivated.

⇨ The valve is in the open position.

13.2.2 Moving the valve to the closed position

1. Move the "ON-Site" DIP switch **8** to the "ON" position.
   ⇨ Control on the device is activated.
2. Press the "INIT/CLOSE" button **10**.
   ⇨ The valve moves slowly to the closed position.
3. Also press the "OPEN" button **9**.
   ⇨ The valve moves quickly to the closed position.
   ⇨ If the valve is fully closed, the high visibility LEDs are lit in orange.
4. Move the "ON-Site" DIP switch **8** to the "OFF" position.
   ⇨ Control on the device is deactivated.

⇨ The valve is in the closed position.

13.3 Operation via the web server

See separate "eSy-Web" operating instructions.

14 Error messages

14.1 LED error messages

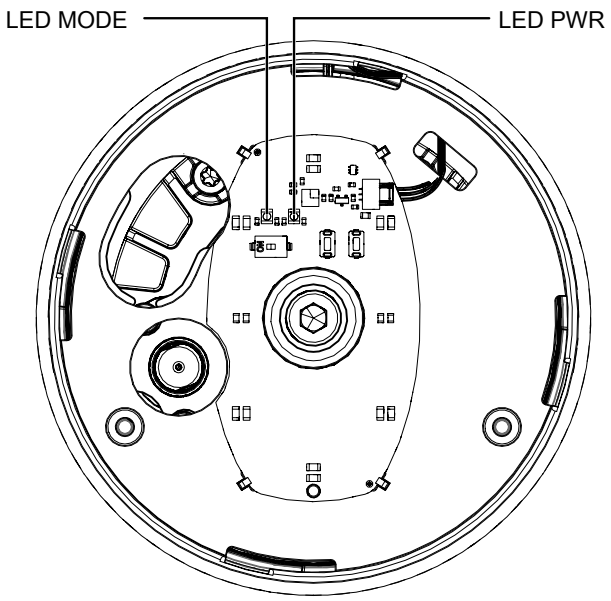

Fig. 8: Position of the status LEDs

The user checks the following conditions directly on-site at the valve using LED MODE and LED PWR:

Function	High visibility LED	
	green	orange
Error / Error display	○	✳

Function	LED MODE		LED PWR	
	yellow	blue	green	red
Undervoltage (no error display of the high visibility LED)	○	○	○	●
Internal error	✳ alternating	○	○	✳ alternating
Calibration faulty	✳ simultaneously	○	○	✳ simultaneously

Function	LED MODE		LED PWR	
	yellow	blue	green	red
Initialization failure	○	○	○	✳
Temperature error (overtemperature)	●	○	○	✳
Set value error (< 4 mA, > 20 mA)	●	○	○	●
Actual value error (< 4 mA, > 20 mA)	✳	○	○	●

14.2 Troubleshooting

Error	Possible cause	Troubleshooting
The product is leaking downstream (does not close or does not close fully)	Operating pressure too high	Operate the product with operating pressure specified in datasheet
	Valve body leaking or damaged	Carry out initialisation, check valve body for damage, replace valve body if necessary.
The product is leaking downstream (doesn't close or doesn't close fully)	Foreign matter between shut off diaphragm and valve body weir	Remove the actuator, remove foreign matter, check diaphragm and valve body weir for potential damage, replace the valve body if necessary
	Shut off diaphragm faulty	Check shut off diaphragm for potential damage, replace the valve body if necessary
The product does not close or does not close fully	The actuator design is not suitable for the operating conditions	Use an actuator that is designed for the operating conditions
The product doesn't close or doesn't close fully	Foreign matter in the product	Remove and clean the product. Replace any damaged valve bodies.
	Voltage is not connected or cable incorrectly wired	Connect voltage or check wiring
The product does not open or does not open fully	Actuator defective	Replace the actuator
	Operating pressure too high	Operate the product with operating pressure specified in datasheet
	The actuator design is not suitable for the operating conditions	Use an actuator that is designed for the operating conditions
	Voltage is not connected	Connect voltage
	Cable ends incorrectly wired	Wire cable ends correctly
The product doesn't open or doesn't open fully	Shut off diaphragm incorrectly mounted	Remove the actuator, check diaphragm mounting, replace the valve body if necessary
	Foreign matter in the product	Remove and clean the product. Check parts for potential damage and replace them if necessary.
The product is leaking between the actuator and valve body	Shut off diaphragm incorrectly mounted	Remove the actuator, check diaphragm mounting, replace the valve body if necessary
	Shut off diaphragm faulty	Check shut off diaphragm for potential damage, replace the valve body if necessary
The product is leaking between actuator and valve body	Actuator/valve body damaged	Replace actuator/valve body
The product is leaking between the actuator flange, clamp and valve body	Valve body/actuator damaged	Replace the valve body/actuator
Body of the GEMÜ product is leaking	Body of the GEMÜ product is faulty	Check the body of the GEMÜ product for potential damage, replace the body if necessary
	Incorrect installation	Check installation of valve body in piping
Valve body connection to piping leaking	Incorrect installation	Check installation of valve body in piping
LED 1 is not lit	No initialisation	Initialise valve
	Supply voltage too low	Check supply voltage
LED 1 lights up yellow	Set value signal outside of the area	Check set value signal
	Temperature error	Check temperature
LED 1 flashes yellow	Actual value signal outside of the area	Check actual value signal

Error	Possible cause	Troubleshooting
LED 1 and 2 are flashing yellow and red simultaneously	No calibration	Contact GEMÜ
	Internal error	Contact GEMÜ

15 Inspection and maintenance

⚠ WARNING

The equipment is subject to pressure!

- ▶ Risk of severe injury or death
- ● Depressurize the plant or plant component.
- ● Completely drain the plant or plant component.

NOTICE

Exceptional maintenance work!

- ▶ Damage to the GEMÜ product
- ● Any maintenance work and repairs not described in these operating instructions must not be performed without consulting the manufacturer first.

The operator must carry out regular visual examination of the GEMÜ products dependent on the operating conditions and the potential danger in order to prevent leakage and damage.

The product also must be disassembled and checked for wear in the corresponding intervals.

1. Have servicing and maintenance work performed by trained personnel.
2. Wear appropriate protective gear as specified in plant operator's guidelines.
3. Shut off plant or plant component.
4. Secure the plant or plant component against recommissioning.
5. Depressurize the plant or plant component.
6. Actuate GEMÜ products which are always in the same position four times a year.

NOTICE

Use of incorrect spare parts!

- ▶ Damage to the GEMÜ product
- ▶ The manufacturer liability and guarantee will be void.
- ● Use only genuine parts from GEMÜ.

16 Removal from piping

⚠ WARNING

Corrosive chemicals!

- ▶ Risk of caustic burns
- ● Wear appropriate protective gear.
- ● Completely drain the plant.

⚠ CAUTION

Hot plant components!

- ▶ Burns
- ● Only work on plant that has cooled down.
- ● Wear protective gear.

⚠ CAUTION

Risk of crushing!

- ▶ Risk of crushing for version without a valve fitted and with an open spigot.
- ● Do not reach into the spigot.

1. Remove in reverse order to installation.
2. Unscrew the electrical wiring.
3. Disassemble the product. Observe warning notes and safety information.

17 Disposal

1. Pay attention to adhered residual material and gas diffusion from penetrated media.
2. Dispose of all parts in accordance with the disposal regulations/environmental protection laws.

18 Returns

Legal regulations for the protection of the environment and personnel require that the completed and signed return delivery note is included with the dispatch documents. Returned goods can be processed only when this note is completed. If no return delivery note is included with the product, GEMÜ cannot process credits or repair work but will dispose of the goods at the operator's expense.

1. Clean the product.
2. Request a return delivery note from GEMÜ.
3. Complete the return delivery note.
4. Send the product with a completed return delivery note to GEMÜ.

19 Declaration of Incorporation according to 2006/42/EC (Machinery Directive)

GEMÜ

Declaration of Incorporation

according to the EC Machinery Directive 2006/42/EC, Annex II, 1.B for partly completed machinery

We, GEMÜ Gebr. Müller Apparatebau GmbH & Co. KG
Fritz-Müller-Straße 6-8
74653 Ingelfingen-Criesbach, Germany

declare that the following product complies with the essential requirements of the Machinery Directive 2006/42/EC.

Product:	GEMÜ SU60, SUB
Productname:	Motorized actuator for single-use valves
From production date:	1st July 2021
Essential requirements of the Machinery Directive 2006/42/EC	1.1.3, 1.1.5., 1.1.7., 1.2.1., 1.3., 1.3.2., 1.3.3., 1.3.4., 1.3.7., 1.3.9., 1.5.3., 1.5.5., 1.5.6., 1.5.7., 1.5.8., 1.5.9., 1.6.5., 2.1.1., 3.2.1., 3.2.2., 3.3.2., 3.4.4., 3.6.3.1.
Technical standard used in parts:	ISO 12100

We also declare that the specific technical documentation has been compiled in accordance with part B of Annex VII.

The manufacturer, or their authorised representative, undertakes to transmit, in response to a reasoned request, relevant documents on the partly completed machinery to the national authorities. This transmission takes place electronically.

Authorised documentation officer: GEMÜ Gebr. Müller Apparatebau GmbH & Co. KG
Fritz-Müller-Straße 6-8
74653 Ingelfingen-Criesbach, Germany

This does not affect the industrial property rights!

Important note! The valve may only be put into operation in machines that comply with the provisions of this directive.

i.V. i.B.

M. Bargheorn
Head of Global Technics

Ingelfingen, 25th August 2021

20 Manufacturer's declaration according to 2014/68/EU (Pressure Equipment Directive)

GEMÜ

Manufacturer's declaration

in accordance with 2014/68/EU (Pressure Equipment Directive)

We, GEMÜ Gebr. Müller Apparatebau GmbH & Co. KG
Fritz-Müller-Straße 6-8
74653 Ingelfingen-Criesbach, Germany

declare that the product listed below complies with the safety requirements of the Pressure Equipment Directive 2014/68/EU.

Description of the pressure equipment:	GEMÜ SU60, SUB
Productname:	Motorized actuator for single-use valves
Notified body:	TÜV Rheinland Industrie Service GmbH Am Grauen Stein 51105 Köln, Germany
Number:	0035
Certificate no.:	01 202 926/Q-02 0036
Conformity assessment procedure:	Module H1
Technical standard used in parts:	AD 2000

Note for products with a nominal size ≤ DN 25:
The products are developed and produced according to GEMÜ process instructions and quality standards which comply with the requirements of ISO 9001 and ISO 14001.
In accordance with Article 4, Paragraph 3 of the Pressure Equipment Directive 2014/68/EU, these products must not be identified by a CE label.

i.V.

M. Barghoorn
Head of Global Technics

Ingelfingen, 25th August 2021

21 Declaration of conformity according to 2014/30/EU (EMC Directive)

GEMÜ

Declarations of Conformity

in accordance with 2014/30/EU (EMC Directive)

We,

GEMÜ Gebr. Müller Apparatebau GmbH & Co. KG
Fritz-Müller-Straße 6-8
74653 Ingelfingen-Criesbach, Germany

declare that the product listed below complies with the safety requirements of the EMC Directive 2014/30/EU.

Description of the product: GEMÜ SU60, SUB
Productname: Motorized actuator for single-use valves
Technical standard used in parts:
Interference resistance:
DIN EN 61326-1 (industrial processes)
DIN EN 61800-3
Interference emission:
DIN EN 61800-3

Note:
The standards are only applied to products with a motorized actuator.

M. Barghoorn
Head of Global Technics

Ingelfingen, 25th August 2021

GEMÜ Gebr. Müller Apparatebau GmbH & Co. KG
Gert-Müller-Platz 1, 74635 Kupferzell, Germany
Phone +49 (0) 7940 1230 · info@gemue.de
www.gemu-group.com

Subject to alteration

10.2026 | 88775842