GEMÜ 12A0

Intelligent electrical position indicator

EN **Operating instructions**

webcode: GW-12A0

IO-Link

All rights including copyrights or industrial property rights are expressly reserved.

Keep the document for future reference.

© GEMÜ Gebr. Müller Apparatebau GmbH & Co. KG
02.10.2026

Quick commissioning

⚠ CAUTION

Hazardous situation!

▶ Risk of injury or damage possible.

- For correct commissioning, the product must be calibrated to the process valve via the initialization process. Depending on the specific configuration, this is done automatically the first time the valve moves.
- During this commissioning, the valve must be opened and closed by the application of compressed air on the actuator. It must therefore be ensured in advance that this does not lead to a dangerous situation.

NOTICE

Operating errors!

- Prior to commissioning, familiarize yourself with the operation of the product.

NOTICE

Incorrect initialization!

- Always carry out initialization without operating medium pressure on the process valve.

NOTICE

- For delivery of the product assembled on a valve at the factory, the complete construction is already ready for operation at a control pressure of 5.5 to 6 bar without operating pressure. A reinitialization is recommended if the plant is operated with a different control pressure or if the mechanical end positions have been changed (e.g. seal replacement on the valve or actuator replacement). The initialization is retained even in the event of voltage cutoff.

1. Mount the product on the process valve mechanically.
2. Connect the product pneumatically.
3. Connect the product electrically.
   - ⇨ Connect the supply voltage 24 V DC (or 18 to 30 V DC) – pin 1: Uv+; pin 3: GND (high-visibility LED display briefly flashes turquoise during device start-up)
   - ⇨ If delivered without a valve: High-visibility LED display indicates a warning (“No initialization”). LED flashes alternately orange/red
4. Carry out automatic initialization.

The end positions are determined automatically as soon as the valve moves. The valve is therefore ready for operation directly, reports the end positions back after an initial movement cycle, and shows these via the LED display (except when the “Detection of end positions mode” parameter does not correspond to “Autonomous”). In this case, initialization must be triggered with a command (IO-Link or app)

Contents

1 General information 5
1.1 Information 5
1.2 Symbols used 5
1.3 Definition of terms 5
1.4 Warning notes 5
2 Safety information 6
3 Product description 7
3.1 Construction 7
3.2 High visibility LEDs 7
3.3 Description 8
3.4 Function 8
3.5 Product label 8
3.6 Digital product label 9
4 Intended use 9
5 Order data 10
5.1 Order codes 10
5.2 Order example 11
6 Technical data 12
6.1 Medium 12
6.2 Temperature 12
6.3 Pressure 12
6.4 Product compliance 12
6.5 Mechanical data 12
6.6 Operating conditions 14
6.7 Electrical data 14
6.7.1 Wireless-specific parameters 15
6.7.2 Digital outputs (Standard IO pins 1* and 2) 16
6.7.3 Optional digital input (Standard IO pin 1*) 16
6.7.4 Sensor system for status monitoring 16
7 Dimensions 17
8 Manufacturer's information 19
8.1 Delivery 19
8.2 Packaging 19
8.3 Transport 19
8.4 Storage 19
9 Assembly and installation 19
9.1 Preparations for installing the valve (linear actuator) 19
9.2 Installing the electrical position indicator (linear actuator) 19
9.2.1 Installing the size 1 linear electrical position indicator 20
9.2.2 Installing the size 2 and 3 linear electrical position indicator 21
9.4 Installing the electrical position indicator (rotary design) 21
9.4.1 Actuators with shaft height of 30 mm 22
9.4.2 Actuators with shaft height of 20 mm 22
9.5 Assembly and installation of the type E1B0 Bluetooth module 23
9.5.1 Preparations for installation 23
9.5.2 Installing the type E1B0 Bluetooth module 23
10 Electrical connection 25
11 Pneumatic connection 26
11.1 Linear design 26
11.2 Rotary design 27
12 Commissioning 29
12.1 Initialization 29
12.1.1 Autonomous end position process/ end position tracking 30
12.1.2 Classic initialization process 31
12.2 Commissioning the type E1B0 Bluetooth module 31
13 Operation 32
13.1 Bluetooth interface 32
13.2 Basic operation of the app 34
13.3 Sensor system for status monitoring 34
13.4 Integrated diagnostic functions 34
14 Specific data relating to IO-Link 36
15 Process data 36
16 IO-Link system commands 37
17 Parameter list (IO-Link and GEMÜ app) 39
18 Troubleshooting 49
19 ISDU errors 55
20 Inspection and maintenance 57
21 Disassembly 57
21.1 Disassembly of the electrical position indicator 57
21.2 Type E1B0 Bluetooth module disassembly . 57
22 Disposal 59
23 Returns 59
24 EU Declaration of Conformity 60
25 EU Declaration of Conformity 61

1 General information

1.1 Information

- The descriptions and instructions apply to the standard versions. For special versions not described in this document the basic information contained herein applies in combination with any additional special documentation.
- Correct installation, operation, maintenance and repair work ensure faultless operation of the product.
- Should there be any doubts or misunderstandings, the German version is the authoritative document.
- Contact us at the address on the last page for staff training information.

1.2 Symbols used

The following symbols are used in this document:

Symbol	Meaning
●	Tasks to be performed
▶	Response(s) to tasks
–	Lists

The following LED symbols are used in the documentation:

Symbol	LED conditions
○	Off
●	Lit (on)
☀	Flashing

1.3 Definition of terms

Speed-^{AP}function

Speed Assembly and Programming, a particularly user-friendly commissioning function for fast mounting, automated setting and initialization of GEMÜ products. Dependent on type, activation uses an external impulse signal or existing precautions on the device (magnetic or housing switch). Changeover to normal operating mode takes place automatically after successful completion.

1.4 Warning notes

Wherever possible, warning notes are organized according to the following scheme:

SIGNAL WORD	
Possible symbol for the specific danger	Type and source of the danger ▶Possible consequences in case of non-compliance ●Measures for avoiding danger

Warning notes are always labelled with a signal word and sometimes also with a symbol for the specific danger.

The following signal words and danger levels are used:

⚠ DANGER

Imminent danger!

▶ Non-observance can cause death or severe injury

⚠ WARNING

Potentially dangerous situation!

▶ Non-observance can cause death or severe injury

⚠ CAUTION

Potentially dangerous situation!

▶ Non-observance can cause moderate to light injury

NOTICE

Potentially dangerous situation!

▶ Non-observance can cause damage to property

The following symbols for the specific dangers can be used within a warning note:

Symbol	Meaning
	Danger of explosion!
	Possible risk of crushing by the indicator spindle!
	Risk of crushing!
	Risk of cutting injuries!
	Electrostatic discharge!
	Hot product!
	Safety notice!

Symbol	Meaning
	The equipment is subject to pressure!
	Hot components!
	Minor or moderate injury from a falling product!

2 Safety information

The safety information in this document refers only to an individual product. Potentially dangerous conditions can arise in combination with other plant components, which need to be considered on the basis of a risk analysis. The operator is responsible for the production of the risk analysis and for compliance with the resulting precautionary measures and regional safety regulations.

The document contains fundamental safety information that must be observed during commissioning, operation and maintenance. Non-compliance with these instructions may cause:

- Personal hazard due to electrical, mechanical and chemical effects
- Hazard to nearby equipment
- Failure of important functions
- Hazard to the environment due to the leakage of dangerous materials

The safety information does not take into account:

- Unexpected incidents and events, which may occur during installation, operation and maintenance
- Local safety regulations which must be adhered to by the operator and by any additional installation personnel

Prior to commissioning:

1. Transport and store the product correctly.
2. Do not paint the bolts and plastic parts of the product.
3. Carry out installation and commissioning using trained personnel.
4. Provide adequate training for installation and operating personnel.
5. Ensure that the contents of the document have been fully understood by the responsible personnel.
6. Define the areas of responsibility.
7. Observe the safety data sheets.
8. Observe the safety regulations for the media used.

During operation:

1. Keep this document available at the place of use.
2. Observe the safety information.
3. Operate the product in accordance with this document.
4. Operate the product in accordance with the specifications.
5. Maintain the product correctly.
6. Do not carry out any maintenance work and repairs not described in this document without consulting the manufacturer first.

In cases of uncertainty:

1. Consult the nearest GEMÜ sales office.

3 Product description

3.1 Construction

Actuator **A** must be ordered separately.

Fig. 1: Linear design

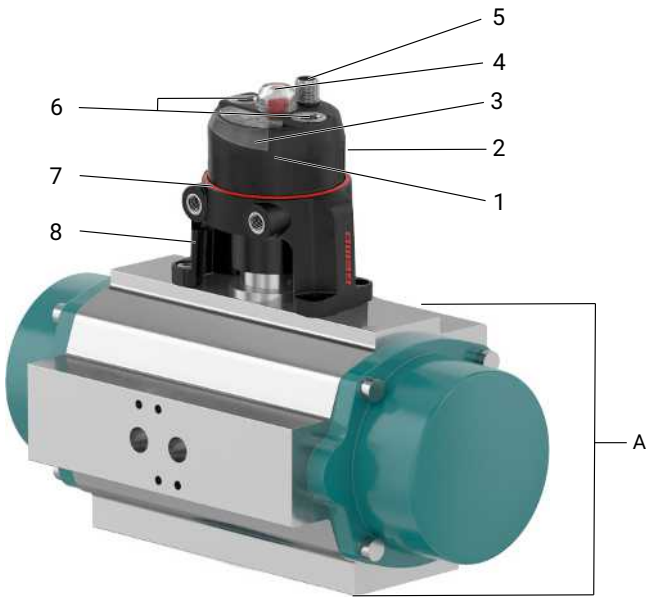

Fig. 2: Rotary design

Item	Name	Materials
1	Housing cover, black	PC
2	Housing ventilation	ePTFE
3	LED signalling window	PC
4	Transparent cap	PC
5	Electrical threaded connection	SS/1.4305
6	Pneumatic connectors	SS/1.4305
7	Seal	FKM
8	Mounting bracket (only rotary design)	PC
	Mounting plate (only BG1, linear)	Anodized aluminium

3.2 High visibility LEDs

As well as the electrical position indicator and error output, a visual signal of the various operating conditions is emitted by high visibility LEDs **1** integrated into the housing. The LEDs are arranged so that two light bands integrated on the side are illuminated, making the condition also apparent from a distance. The following conditions are illustrated here:

Valve position indicator [1)]

Colour of high visibility LEDs		Function
Standard	Inversed [2)]	
Green	Orange	Process valve in OPEN position
Orange	Green	Process valve in CLOSED position
Flashing green	Flashing orange	Movement of process valve in OPEN direction
Flashing orange	Flashing green	Movement of process valve in CLOSED direction

[1)] The valve position indicator can be dimmed or deactivated via parameters

[2)] Inversed display can be activated via parameters

Status indication

Colour of high-visibility LEDs	Function
Standard	
Flashing yellow/white	Initialization active
Flashing white	Localization active
Flashing orange/red	General warning active
Flashing red	General error active
Flashing yellow/turquoise	Maintenance required
Flashing blue (briefly)	Wireless connection established
Flashing purple/green	Internal update process active
Flashing turquoise (briefly)	Device start
Lit up red (permanently)	Serious error (device faulty)

3.3 Description

The GEMÜ 12A0 position indicator is compatible with all pneumatically actuated process valves of the new platform generation as well as with quarter turn valves. The position sensor determines the valve position precisely, reliably and wear-free. The current valve position is indicated by far-sighted LEDs and signalled back via electrical signals. The innovative position indicator is characterised by modern communication interfaces, integrated sensors and the option of operation via the GEMÜ app.

3.4 Function

The GEMÜ 12A0 electrical position indicator shows the position of the valve. When the valve is opened, the spindle in the electrical position indicator moves upwards and indicates that the valve is open using the high visibility LEDs and electrical interface. When the valve is closed, the position sensor system detects the lower position and indicates that the valve is closed using the high visibility LEDs and electrical interface. IO-Link incl. SIO mode (24 V DC signals) is available as an electrical interface. The product automatically recognizes whether IO-Link communication can be established and switches to IO-Link mode accordingly. If this is not the case, SIO mode is activated.

3.5 Product label

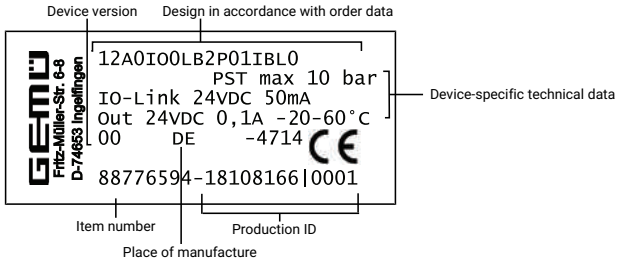

The date of manufacture is encoded in the production ID and can be obtained from GEMÜ.

NOTICE

Device version

- The device version provides quick information about the firmware used and the basic device status. For complete information about the specific product characteristics, the firmware and hardware versions must be read electronically via the communication interface.

Device version	Firmware version	Valid from	Changes
00	V1.0.0.2	08/2024	IODD version: 1220609 (0x12A001)
01	V1.1.0.0	07/2025	Conversion to plug-in Bluetooth module and parameter extension (new IODD version: 1220610 (0x12A002) required)
02	V2.0.0.0	01/2026	Functional enhancement
03	V2.0.0.1	02/2026	Functional enhancement

3.6 Digital product label

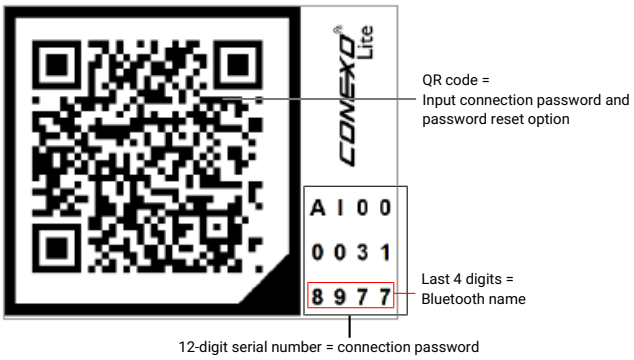

The product has a digital product label. The digital product label allows the product to be uniquely identified globally and, in addition to the classic product label, call up lots of additional product-related information digitally.

Using the digital product label, GEMÜ fulfils the requirements of DIN SPEC 91406 on the automatic identification of physical objects.

The digital product label contains a readable 12-digit serial number in addition to the QR code.

For products operated via the GEMÜ app, the last 4 digits of the 12-digit serial number are used as the Bluetooth name for the product in its default state (e.g. 8977 here). The 12-digit serial number is used as the password for connecting to the product in its default state.

It is recommended that the Bluetooth name and password for Bluetooth connection are changed (further information is given in the chapter "Operation using wireless interface (see “Bluetooth interface“, page 32).

4 Intended use

⚠ DANGER

Danger of explosion!
- ▶ Risk of death or severe injury
- ● Do **not** use the product in potentially explosive zones.

⚠ WARNING

Improper use of the product!
- ▶ Risk of severe injury or death
- ▶ Manufacturer liability and guarantee will be void.
- ● Only use the product in accordance with the operating conditions specified in the contract documentation and in this document.

The product is not intended for use in potentially explosive areas.

The product is used solely as a measurement device for electrical and optical position feedback for linear actuators in the new platform generation and compatible quarter turn actuators. The product is designed to be fitted to GEMÜ linear valves and quarter turn valves. The product has a microprocessor-controlled intelligent position sensor as well as a digital, contactless position sensor system. The valve end positions and the integrated operating conditions can be monitored via the electrical connections. Any other use or use above and beyond this is not permitted. GEMÜ shall not be liable for any consequential damage. The user alone bears the risk.

If the instructions listed above and the general operating instructions are not observed, the guarantee for the product and the legal liability expires.

Please pay attention to the pertinent technical safety regulations when planning both the use and operation of the product.

1. Use the product in accordance with the technical data.

4.1 Product without special function X

The product is not intended for use in potentially explosive areas.

4.2 Product with special function X

The product with the special version X order option is intended for use in potentially explosive areas of zone 2 with gases, mists or vapours and zone 22 with combustible dusts in accordance with EU directive 2014/34/EU (ATEX).

The product has the following explosion protection marking:

ATEX

Gas: Ⓔx II 3G Ex ec IIC T4 Gc X

Dust: Ⓔx II 3D Ex tc IIIC T100°C Dc X

The product has been developed in compliance with the following harmonised standards:

- EN IEC 60079-0:2018
- EN IEC 60079-7:2015/A1:2018
- EN 60079-31:2014

The product can be used in the following ambient temperature ranges: +10 °C to 40 °C

For use in potentially explosive areas, the following conditions or operation limits must be observed:

Index X is applied to the explosion protection marking.

The following special conditions must be complied with:

1. Connection cables and connectors must be protected from damage.
2. Layers of dust > 5 mm must be removed.
3. Warning label "Danger from electrostatic build-up".
4. Warning label "Do not disconnect when live".

The housing must be installed protected from mechanical influences.

RFID chips must not be read out in potentially explosive areas.

5 Order data

The order data provide an overview of standard configurations.

Please check the availability before ordering. Other configurations available on request.

Note: If there are restrictions on the customer or on the system side which prohibit the use of a Bluetooth interface, we recommend using an order variant with a deactivated Bluetooth interface or without a Bluetooth interface.

- For designs with a Bluetooth interface, the option also exists to deactivate the interface via parameters independently later or to uninstall the type E1B0 Bluetooth module.
- For designs without a Bluetooth interface, the option also exists to retrofit the interface independently later.

Note: The IO-Link version also supports an SIO mode as standard. This means that conventional 24 V DC signals are used.

Order codes

1 Type	Code
Intelligent electrical position indicator	12A0

2 Electrical interface	Code
IO-Link	IO

3 Action	Code
Any	0

4 Direction of movement	Code
Linear	L
Rotary	R

5 Device version	Code
Basic	B

6 Interface/size	Code
Size 1	1
Size 2	2
Size 3	3

7 Body material	Code
Plastic	P

8 Options	Code
Without	0

9 Electrical connection	Code
M12 connector	1

10 Air supply	Code
Integrated	I
External	E

11 Wireless interface	Code
Without	0
Bluetooth	B

12 Local user interface	Code
LEDs	L

13 Mechanical option	Code
Without	0

14 Special version	Code
Without	
Explosion protection	X

Order example

Ordering option	Code	Description
1 Type	12A0	Intelligent electrical position indicator
2 Electrical interface	IO	IO-Link
3 Action	0	Any
4 Direction of movement	L	Linear
5 Device version	B	Basic
6 Interface/size	2	Size 2
7 Body material	P	Plastic
8 Options	0	Without
9 Electrical connection	1	M12 connector
10 Air supply	I	Integrated
11 Wireless interface	B	Bluetooth
12 Local user interface	L	LEDs
13 Mechanical option	0	Without
14 Special version		Without

6 Technical data

6.1 Medium

Working medium: Compressed air and inert gases

6.2 Temperature

Ambient temperature: -20 – 60 °C (standard version)
10–40 °C (special version code X)

Control medium temperature: -20 — 60 °C

Storage temperature: -20 — 70 °C

6.3 Pressure

Control pressure: max. 10 bar
The applied pressure must not exceed the maximum control pressure of the process valve.

6.4 Product compliance

EMC Directive: 2014/30/EU

RoHS Directive: 2011/65/EU

Approval: Fieldbus/communication: IO-Link specification V1.1.4

Explosion protection: 2014/34/EU

ATEX marking (only special function X):
Ⓔx Gas: II 3G Ex ec IIC T4 Gc X
Ⓔx Dust: II 3D Ex tc IIIC T100°C Dc X

FMEDA:

Product description:	Intelligent GEMÜ electrical position indicator 12A0
Device type:	B
Software version:	V1.1.X.X
Fail safe function:	The fail-safe state is defined as a High (24 V DC) signal at pin 4 (device version 24 V IO-Link)
HFT (hardware fault tolerance):	0

6.5 Mechanical data

Installation position: Optional

Weight:

Size 1, linear	210 g
Size 2, linear	130 g
Size 2, rotary	235 g
Size 3, linear	290 g

Linear travel sensor:

	Size 1 and 2	Size 3
Minimum stroke: [1]	2.0 mm	5.0 mm
Maximum stroke: [2]	29.0 mm	45.0 mm
Correlation between travel sensor spindle/valve position [3]	Retracted (top) ≙ 100% (valve open) Extended (bottom) ≙ 0% (valve closed)	

[1] Relevant for successful initialization.

[2] Corresponds to the linearized stroke range.

[3] Relative to the setting value of the “Inversion of travel sensor signal” parameter = 0 (deactivated). If the inversion of the travel sensor signal is activated, the correlation is correspondingly inverted.

Rotary travel sensor:

Minimum angle of rotation: [1]	7°
Maximum angle of rotation:	-7° to 97°
Mounting bracket:	Suitable for actuators with VDI/VDE 3845 interface, borehole pattern 80x30 mm, shaft height 20 and 30 mm
[1] Relevant for successful initialization	

6.6 Operating conditions

Ambient conditions: Use indoors and outdoors
Dry and wet environments

Height: Up to 2000 m (above sea level)

Relative air humidity: 0–100%

Protection class:

Single device as supplied	Mounted to actuator/mounting bracket
Unintended operating condition	Size 1–3, linear and size 2, rotary: **IP 65** Size 2, linear: **IP 67** (only for piped air outlet)

Degree of contamination: 4 (pollution degree)

6.7 Electrical data

Supply voltage Uv: 18 - 30 V DC (in accordance with IO-Link specification)

Duty cycle: Continuous duty

Reverse polarity protection: yes

Electrical protection class: III

Current consumption:

SIO mode	IO-Link mode
Maximum 40 mA	Maximum 50 mA

Electrical connection type: 1 x 5-pin M12 plug (A-coded)

Switching characteristic:

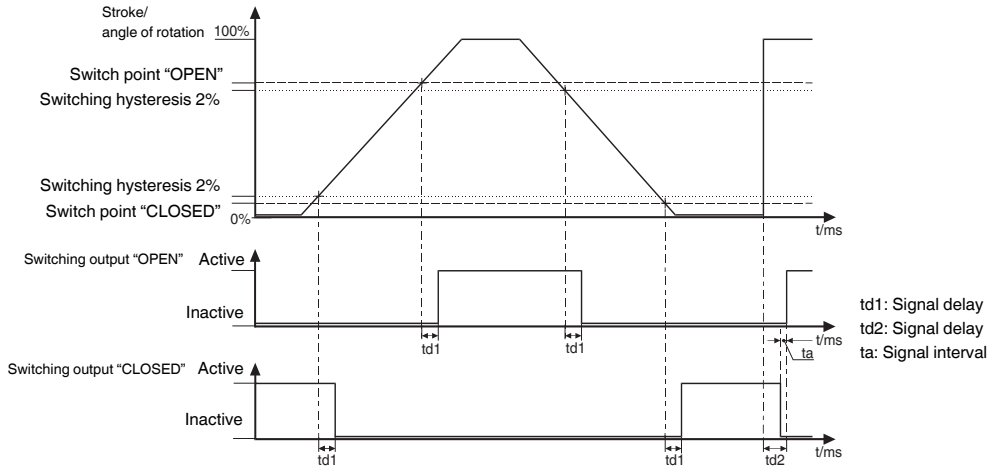

Switch points in data in percent of the programmed stroke, with reference to the lower end position (0%)

Switch points:

	Size 1 and 2	Size 3
Switch point CLOSED	Default setting: 12% (adjustable from 0–90%)	
Switch point OPEN	Default setting: 75% (adjustable from 10–100%)	
Min. switch point CLOSED	0.8 mm for linear/2° for rotary	1.2 mm
Min. switch point OPEN	0.5 mm for linear/2° for rotary	0.75 mm
Switching hysteresis	2% (relative to the initialized range upstream of the respective switch point)	

If the percentage switch points dependent on the programmed stroke are less than the permissible min. switch points, the min. switch points will apply automatically.
The min. switch points refer to the value before achieving the initialized end position values for the respective item. For example, the CLOSED end position is output at the very latest from 0.8 or 1.2 mm/2° before reaching the initialized end position value of the CLOSED position. The detection and feedback of end positions can also take place earlier (dependent on the stroke or angle of rotation) due to the set percentage value of switch point OPEN or CLOSED.
A difference of at least 10% must be maintained between the switch point settings.

Interface:

	Bluetooth Low Energy (only with integrated wireless interface)	IO-Link
Function	Parameterization, configuration, diagnostics and operation	Parameterization, configuration, diagnostics and operation
Prerequisite	Compatible smartphone/tablet with Android or iOS [1)] - Apple iOS: Version 16.6 or higher - Android: Version 8.0 (“Oreo”) or higher - Bluetooth 4.0 LE or newer	IO-Link master spec. 1.1
Version	Bluetooth 5.4 (Low Energy)	IO-Link spec. V1.1.4

[1)] The compatible GEMÜ app can be downloaded in the respective stores (Apple App Store or Google Play Store).

6.7.1 Wireless-specific parameters

Technology: Bluetooth Low Energy (only possible in conjunction with the GEMÜ app)

Frequency: 2.4 GHz (2.4–2.4835 GHz)

Output power: Max. 11.2 dBm

6.7.2 Digital outputs (Standard IO pins 1* and 2)

*Standard IO pin 1 can be used as input or output depending on the selected function. Default setting = Output

Note: Outputs are overload proof. In the event of overheating due to too long an overload, the device switches off until the temperature has fallen below the temperature threshold once more.

Type of contact: Push-Pull

Switching current: Max. 100 mA

Voltage drop Vdrop: max. 0.9 V DC at 100 mA

Switching voltage: $+U_v - V_{drop}$

6.7.3 Optional digital input (Standard IO pin 1*)

*Standard IO pin 1 can be used in SIO operation as input or output depending on the selected configuration. Default setting = Output

Input current: max. 50 µA

Input voltage: max. 30 V DC

High level: > 12.5 V DC

Low level: < 9 V DC

6.7.4 Sensor system for status monitoring

Value	Value range	Sensor resolution	Deviation	Typical deviation	Long-term stability
Internal temperature	-40 to 100 °C	0.016 °C	± 1.60 °C [1]	± 0.20 °C [1]	< ± 0.02 °C/year
Internal humidity	0 to 100%	0.03%	± 3.5% between 20 to 80% ± 6.5% between 0 to 100%	± 2% between 20 to 80% ± 3.5% between 0 to 100%	± 0.25%/year
Internal pressure	260 to 1260 mbar	24 bit	± 1.0 mbar	± 0.1 mbar	-
Control air supply pressure	0 to 30 bar	1.31 mbar	± 110 mbar	± 30 mbar	± 30 mbar/year
Installation position (in two directions)	-180° to 180°	16 bit	± 3.1° [2]		-
Acceleration (in three axes)	-156.96 m/s² to 156.96 m/s²	16 bit	±1.48 m/s²	± 0.52 m/s²	-
Current consumption	0 to 375 mA	16 bit	±3.0 mA	±0.5 mA	-
Supply voltage	0 to 36 V	16 bit	±0.5 V [3]	±0.05 V [3]	-

[1] The value is measured on the inside of the housing with the corresponding influences of the device electronics (e.g. heating).

[2] The data refers to a vibration-free status. In the case of vibrations, the deviation can be significantly greater or a value can no longer be determined.

[3] In the case of increased loads, the outputs in SIO mode can show an additional deviation of max. 0.5 V.

7 Dimensions

Linear BG1

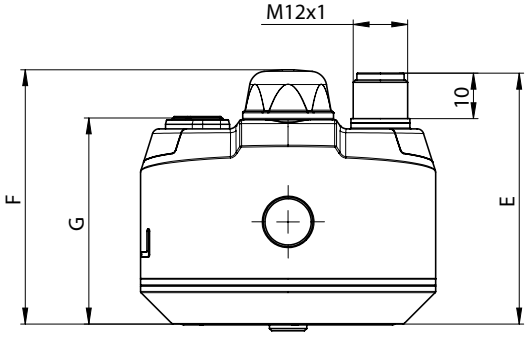

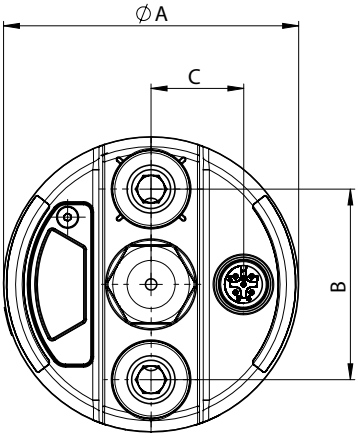

Linear BG2

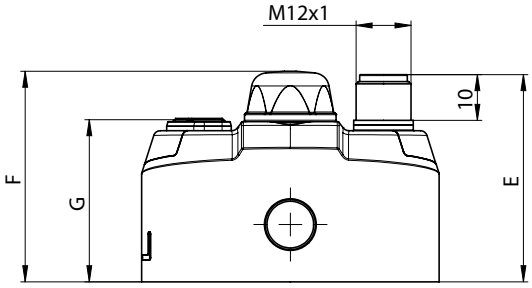

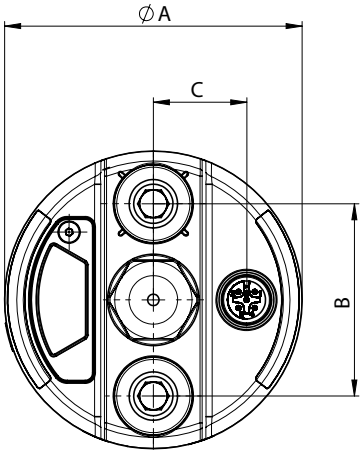

Linear BG3

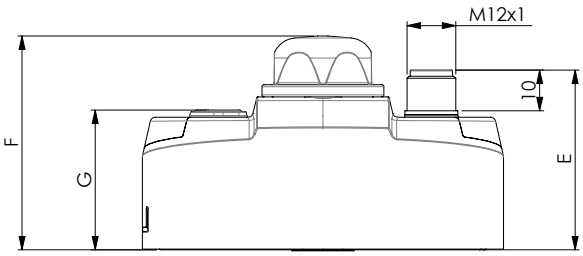

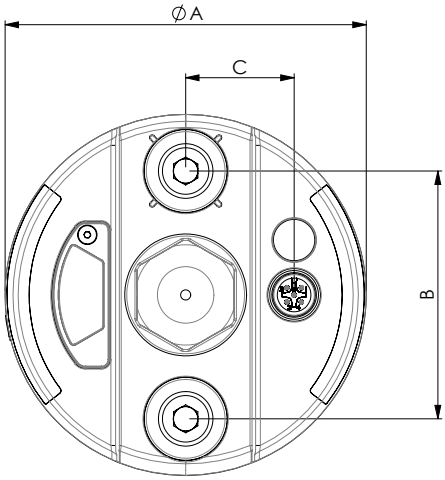

Rotary BG2

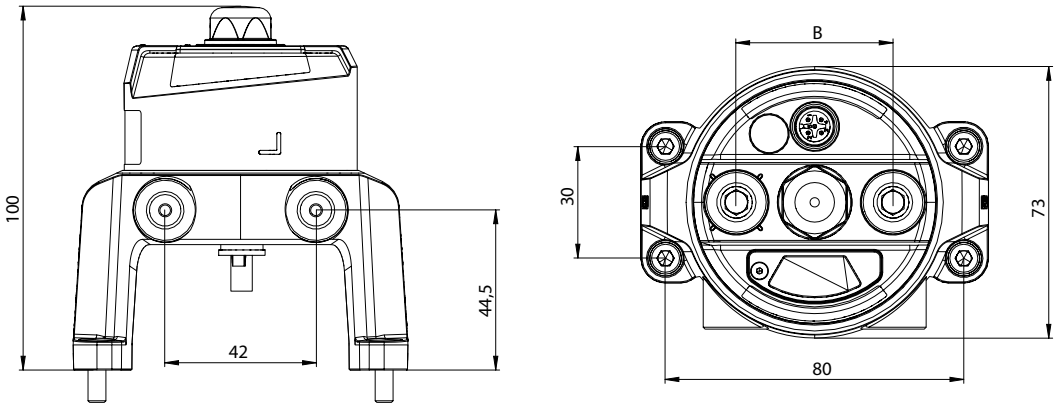

	Dia. A	B	C	E	F	G
BG1 (only linear)	65.0	42.0	20.4	55.3	56.0	45.4
BG2 (linear and rotary)	65.0	42.0	20.4	45.3	46.0	35.4
BG3 (linear)	88.9	61.0	26.7	44.25	52.65	34.4

BG = size
Dimensions in mm

8 Manufacturer's information

8.1 Delivery

- Check that all parts are present and check for any damage immediately upon receipt.

The product's performance is tested at the factory. The scope of delivery is apparent from the dispatch documents and the design from the order number.

8.2 Packaging

The product is packaged in a cardboard box which can be recycled as paper.

8.3 Transport

1. Only transport the product by suitable means. Do not drop. Handle carefully.
2. After the installation dispose of transport packaging material according to relevant local or national disposal regulations / environmental protection laws.

8.4 Storage

1. Store the product free from dust and moisture in its original packaging.
2. Avoid UV rays and direct sunlight.
3. Do not exceed the maximum storage temperature (see chapter "Technical data").
4. Do not store solvents, chemicals, acids, fuels or similar fluids in the same room as GEMÜ products and their spare parts.
5. Close the compressed air connections with protection caps or sealing plugs.

9 Assembly and installation

9.1 Preparations for installing the valve (linear actuator)

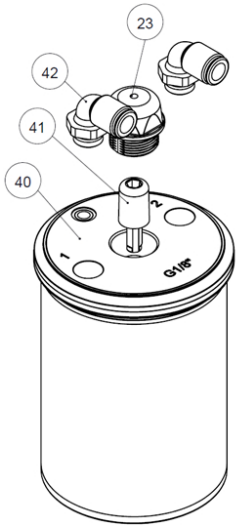

Tool	Actuator size		
	1	2, 3	4, 5, 6
Open-end wrench 1	Size 13	Size 17	Size 24
Open-end wrench 2	Depending on pneumatic connection used		
Allen key	Size 3	Size 4	Size 6

1. Move actuator **40** into zero position (actuator vented).
   ⇨ Ensure that the actuator is **depressurized**.
2. Remove transparent cap **23** with open-end wrench 1.
3. Remove indicator spindle **41** with Allen key.
4. Remove pneumatic connections **42** with open-end wrench 2.

9.2 Installing the electrical position indicator (linear actuator)

⚠ WARNING

Possible risk of crushing by the indicator spindle!

- ▶ Injury possible, because the actuator must be pressurised in order to reach the flat (only NC drives).
- Do not reach into the operating range of the indicator spindle.

NOTICE

Leak-tightness of housing affected.

- ▶ If the contact surface of the actuator has previously been damaged, the leak-tightness of the housing cannot be ensured.
- Check the contact surfaces of the actuator before installation and ensure they are undamaged. Contact GEMÜ if damage can be detected.

NOTICE

Contamination and humidity!

- ▶ If there is dirt and/or humidity on the inside of the actuator or on the contact surfaces of the actuator, it can cause functional impairment or device failure.
- ● Check and ensure that there is no humidity and/or dirt on the inside or on the contact surfaces of the actuator, or remove any such before assembly.

NOTICE

Leak-tightness of the product adversely affected!

- ▶ In the case of unclean inserted or seated seals (14 or 5) both the housing seal and the pneumatic tightness on the actuator can be adversely affected.
- ● Check and ensure that the seals are complete and that they are seated correctly in the intended position.

NOTICE

The pneumatic connections also act as a fixture to the actuator!

- ● Before performing any work on the product, depressurize the pneumatic connection.

9.2.1 Installing the size 1 linear electrical position indicator

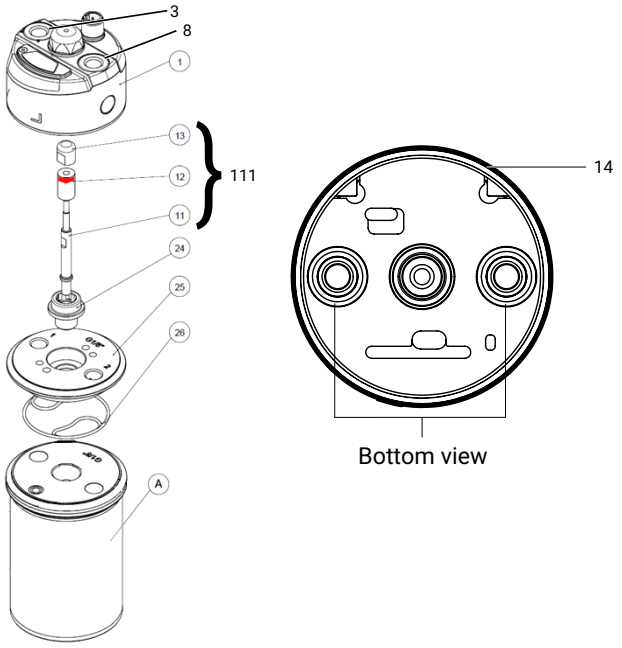

Tools:	
Open-end wrench 1:	Wrench size 4
Allen key 2:	Wrench size 10
Allen key 3:	Wrench size 6

1. Move actuator **A** into zero position (actuator vented).
   ⇨ Ensure that the actuator is depressurized.
2. Carefully insert the seal **26** into the groove provided for it in the mounting plate **25** and check that it is seated correctly.
3. Align the mounting plate **25** and the inserted seal **26** with the actuator **A** control air connectors of the same name.
   ⇨ (Marking of mounting plate “1” with control air connector actuator “1” and “2” with “2”).
4. Connect mounting plate **25** (if necessary, gently twist until the collars of the mounting plate **25** engage in the control air connectors of actuator **A**) and use collar screw **24** to fasten it to the central thread of actuator **A** and tighten (size 10 Allen key – torque 15 Nm).
5. Move the actuator **A** to the open position (apply control pressure to NC actuators).
6. Screw the operating bush **111** into actuator **A** and tighten it to the wrench surface (size 4 open-end wrench) (torque of 2 to 2.5 Nm – the tightening torque is reached if the piston is also turned).
7. Move actuator **A** back into zero position (actuator vented).
   ⇨ Ensure that the actuator is depressurized.

8. Carefully insert the moulded seal **14** into the groove provided for it at the bottom of the housing of the electrical position indicator **1** and check that it is seated correctly.
9. Check and ensure that the sealing rings **5** are seated correctly on both stud bolts.
10. Align the electrical position indicator **1**. **Please note:** The orientation is dependent on the control function of the actuator.
    - ⇨ Control function 1 (normally closed): Actuator control air connector = 1 // → electrical position indicator control air connector **with marking**.
    - ⇨ Control function 2 (normally open): Actuator control air connector = 2 // → electrical position indicator control air connector **with marking**.
    - ⇨ Control function 3 (double acting): Actuator control air connector = 1 // → electrical position indicator control air connector **with marking**.
11. Alternately screw in the stud bolts **3** and **8** in the correct orientation (size 6 Allen key) and tighten them (10 Nm torque).
    - ⇨ **Note:** The hexagon socket screw drive is incorporated into the stud bolts. As a result, an Allen key with a shaft length of at least 16 mm is required.
12. Make the pneumatic and electrical connection.

9.2.2 Installing the size 2 and 3 linear electrical position indicator

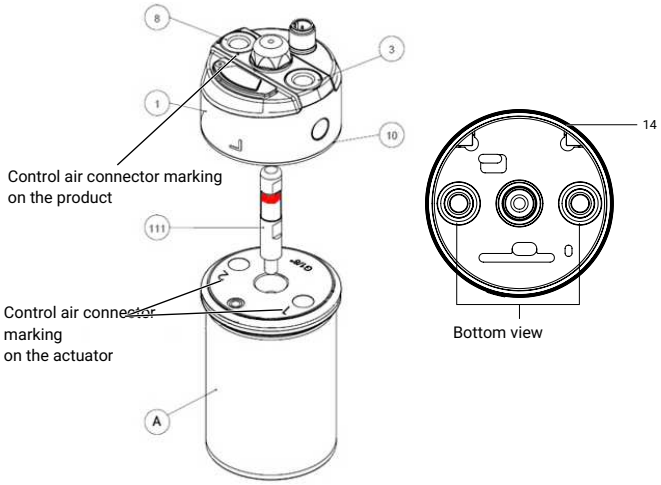

Tools:	
Open-end wrench 1:	Wrench size 8
Allen key 2:	Wrench size 6

1. Move the actuator **A** to the open position (apply control pressure to NC actuators).
2. Screw the operating bush **111** into actuator **A** and tighten it to the wrench surface (size 8 open-end wrench) (torque of 2.5 to 3 Nm – the tightening torque is reached if the piston is also turned).
3. Move actuator **A** into zero position (actuator vented).
    - ⇨ Ensure that the actuator is **depressurized**.
4. Carefully insert the moulded seal **14** into the groove provided for it at the bottom of the housing of the electrical position indicator, and check that it is seated correctly.
5. Check and ensure that the sealing rings **5** are seated correctly on both stud bolts.
6. Align the electrical position indicator. **Please note:** The orientation is dependent on the control function of the actuator.
    - ⇨ Control function 1 (normally closed): Actuator control air connector = **1** // → electrical position indicator control air connector **with marking**.
    - ⇨ Control function 2 (normally open): Actuator control air connector = **2** // → electrical position indicator control air connector **with marking**.
    - ⇨ Control function 3 (double acting): Actuator control air connector = **1** // → electrical position indicator control air connector **with marking**.
7. Alternately screw in the stud bolts **3** and **8** in the correct orientation (size 6 Allen key) and tighten them (10 Nm torque).
    - ⇨ Note: The hexagon socket screw drive is incorporated into the stud bolts. As a result, an Allen key with a shaft length of at least 16 mm (size 2) or 20 mm (size 3) is required.
8. Make the pneumatic and electrical connection.

9.3 Preparations for assembly to the valve (quarter turn actuator)

1. Move the actuator **A** into zero position (actuator vented).

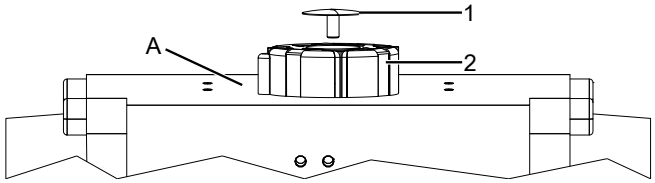

2. Remove the screw **1** from the trigger cam **2**.

9.4 Installing the electrical position indicator (rotary design)

Bolt dimensions and tools:

Bolt **4**	Plastic M6 x 45 or 55 mm with slotted drive	Slotted screwdriver (max. 10.0 x 1.6 mm)

Bolts **6**	Stainless steel M5 x 12 mm with hexagon socket	Allen key, wrench size 4

NOTICE

- ▶ Bolt **4** is enclosed in two different lengths. These are to be used as follows:
- Short bolt (45 mm): Shaft height 30 mm
- Long bolt (55 mm): Shaft height 20 mm

NOTICE

- ▶ Spacer **8** is only required for actuators with a shaft height of 20 mm.

9.4.1 Actuators with shaft height of 30 mm

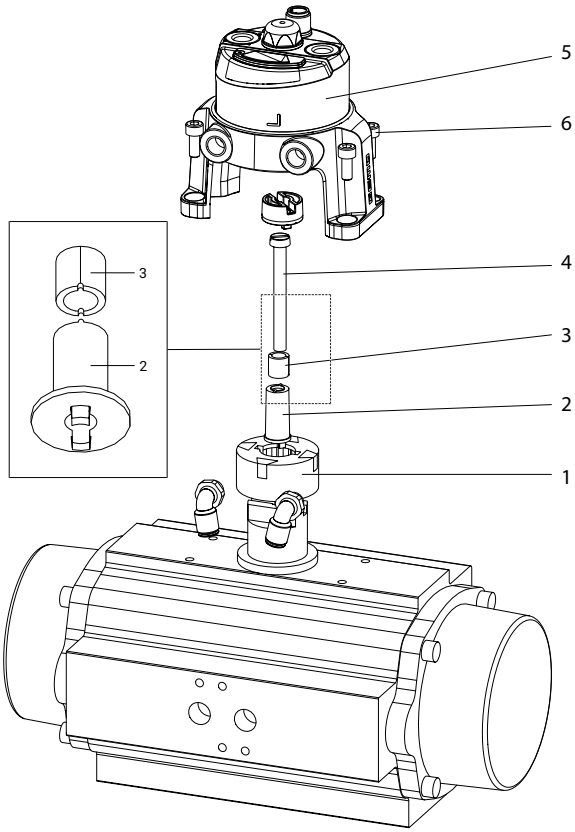

1. Use short bolt (45 mm) **4**.

⇨ The long bolt and spacer **8**, which is also enclosed, are not required and can be disposed of.

3. Attach trigger cam **1** (if present) to the shaft of the actuator.
4. Put magnetic holder **2** on the groove of the actuator shaft or trigger cam.
5. Put bolt (45 mm) **4** in magnet **3**, screw into the actuator shaft via the magnetic holder and carefully tighten (flat-head screwdriver; max. 0.4 Nm).

   ⇨ **Note:** Magnet 3 is equipped with a continuous groove on one side. The groove must engage in the corresponding elevation of magnetic holder 2, going downwards in the direction of the actuator (see detailed drawing). Magnet 3 can be radially aligned here in both positions (0 or 180°).
6. Mount product **5** on the actuator with bolts **6**.

⇨ You can choose the orientation. It is, however, recommended that the side pneumatic connectors of the mounting bracket are aligned with the control air connectors of the actuator.

9.4.2 Actuators with shaft height of 20 mm

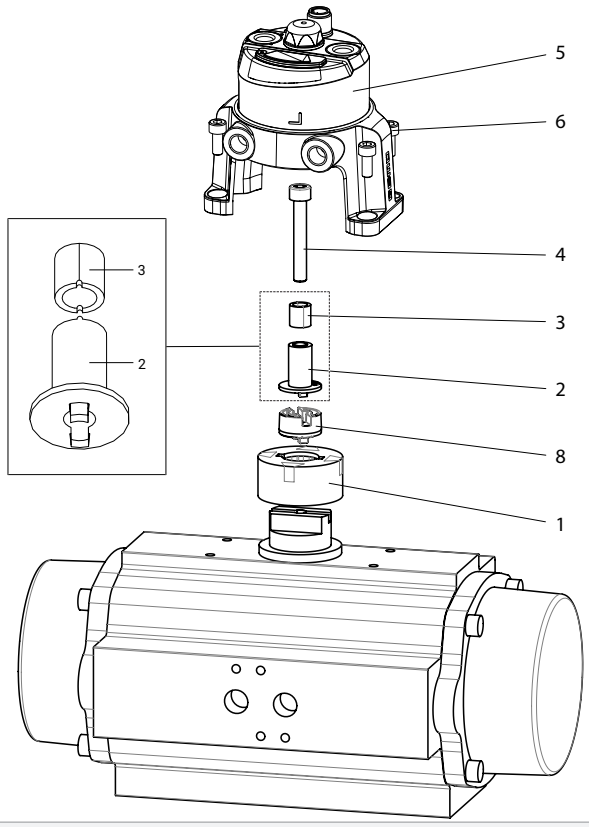

1. Use long bolt (55 mm) **4** and spacer **8**.

⇨ The short bolt is not required and can be disposed of.

3. Attach trigger cam **1** (if present) to the shaft of the actuator.
4. Put spacer **8** in the groove of the actuator shaft or trigger cam **1**.
5. Attach magnetic holder **2** to the groove of spacer **8**.
6. Put bolt (55 mm) **4** in magnet **3**, screw into the actuator shaft via the magnetic holder and carefully tighten (flat-head screwdriver; max. 0.4 Nm).

   ⇨ **Note:** Magnet 3 is equipped with a continuous groove on one side. The groove must engage in the corresponding elevation of magnetic holder 2, going downwards in the direction of the actuator (see detailed drawing). Magnet 3 can be radially aligned here in both positions (0 or 180°).
7. Mount product **5** on the actuator with bolts **6**.

⇨ You can choose the orientation. It is, however, recommended that the side pneumatic connectors of the mounting bracket are aligned with the control air connectors of the actuator.

9.5 Assembly and installation of the type E1B0 Bluetooth module

Note: This chapter is only relevant for later installation or a replacement.
Observe the separate documentation for the type E1B0 Bluetooth module.

⚠ CAUTION

Risk of crushing!
- ▶ Pinching of fingers during disassembly/installation of the type E1B0 Bluetooth module in the slider cover or of the type E1B0 Bluetooth module with a slider cover in the housing
- Installation work must only be performed by trained personnel.
- Wear suitable protective gear.

⚠ CAUTION

Risk of cutting injuries!
- ▶ Risk of cutting injuries due to sharp edges, corners or protruding parts
- Installation and disassembly work must only be performed by trained personnel.
- Use suitable cutting protection.

NOTICE

Damage to the product!
- Ensure that the module is installed/disassembled correctly and pay attention to any damage to the product.

NOTICE

Electrostatic discharge!
- ▶ Destruction of electronic components.
- Take the necessary ESD safety precautions during installation of the product.

9.5.1 Preparations for installation

- Ensure ESD protection
- Prevent foreign matter from penetrating into the device's open slot
- Avoid mechanical stress (for example, vibrations)
- Ensure that the environment is clean
- Check for moisture prior to installation
- Disconnect the product from the power supply

9.5.2 Installing the type E1B0 Bluetooth module

Check all parts for damage, contaminants and moisture prior to installation. The module must only be installed by trained personnel. To prevent damage, suitable precautionary measures must be provided for with regard to ESD.

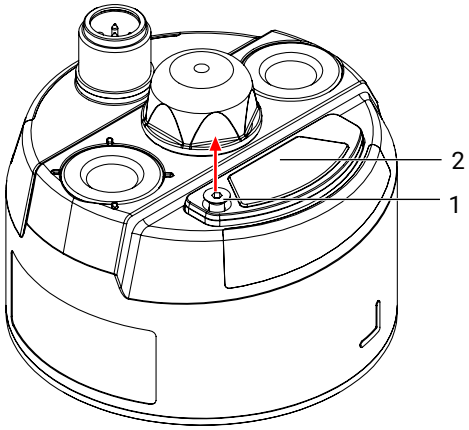

1. Undo the screw **1** (hexagon socket, size 1.5) of the slider cover **2** (the screw is secured against falling out of the slider cover **2** by a circlip).

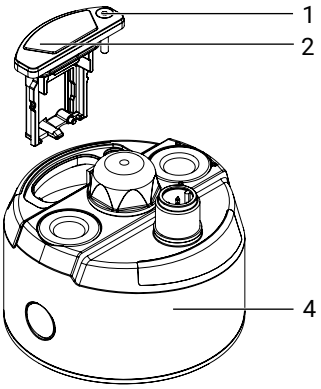

2. Remove the slider cover **2** with the screw **1** from the housing **4**.
   ⇨ To accomplish this, carefully grip the screw head with small pliers (e.g. needle-nose pliers) and pull it out vertically upwards. Take care not to tilt or damage the part.

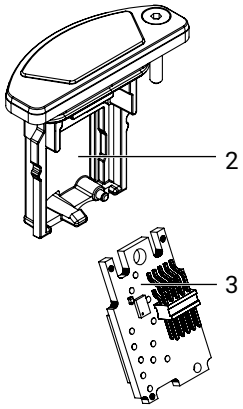

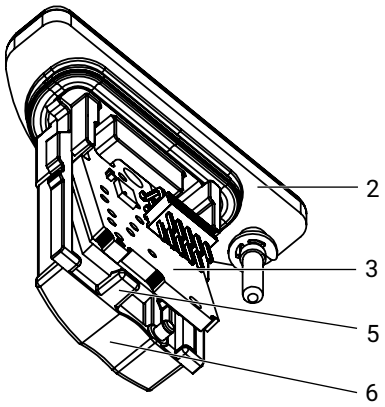

3. Insert the type E1B0 Bluetooth module **3** into the slider cover **2** until the snap hook **5** clicks into position.
4. Ensure that the type E1B0 Bluetooth module **3** is installed correctly!
   ⇨ The pins of the type E1B0 Bluetooth module **3** in the slider cover **2** should be facing forwards and aligned towards the snap hook **5** and recessed handle **6**.
5. Reinstall the slider cover **2** with the type E1B0 Bluetooth module **3** fitted back into the housing **4** and tighten with a screw **1** (hand tight, maximum torque 0.4 Nm, size 1.5 hexagon socket).

10 Electrical connection

NOTICE

Risk of damage to the connector plug!

▶ Connector plug may become damaged
- Only hand-tighten the union nut of the connector plug to a maximum of 0.5 Nm.
- No tools are permitted.

NOTICE

It is possible to touch the electronics when the positioner is dismantled!

- When disassembling the electrical position indicator, disconnect the power supply.

NOTICE

Risk of damage!

▶ Product failure
- Connector cannot be aligned.
- The connector must be protected from turning.

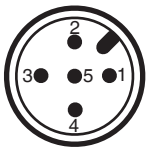

	Description
1	Uv+, 24 V DC, supply voltage
2	I/Q/Standard IO pin 1* (24 V DC, OPEN end position output)
3	Uv-, GND
4	C/Q IO-Link/Standard IO pin 2** (24 V DC, CLOSED end position output)
5	n.c.***

* Depending on the selected configuration of the associated “Standard IO pin 1 function” parameter, can be used as an input or output in SIO operation. Default setting = OPEN end position output

** Output function in SIO operation can be configured via the associated “Standard IO pin 2 function” parameter.
Default setting = CLOSED end position output

* Pin 5 is not relevant for the function and may therefore be populated (visible) or not populated (not present).

11 Pneumatic connection

11.1 Linear design

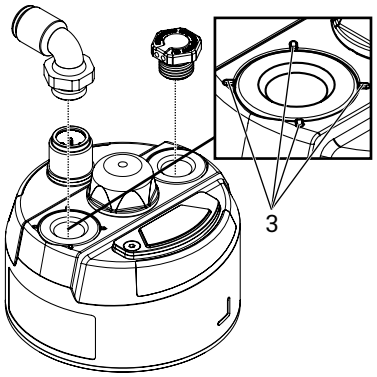

Note: The figure shows the attachment options for single acting (NO or NC)

Connection	Marking	Designation	Connection size
1	Marking on connection (see figure above **3**)	Working connection for process valve (with integrated control pressure detection)	BG1 and BG2: **G1/8** BG3: **G1/4**
2	(without marking)	Process valve spring chamber ventilation (single acting)/working connection 2 for process valve (only double acting)	BG1 and BG2: **G1/8** BG3: **G1/4**

The product comes with two pneumatic connections (for commercially available 6x4 mm pneumatic tubing) and a venting plug as standard. These are provided as follows:

Control function of valve actuator	Connector 1	Connector 2
Single acting (NO or NC) (see figure at the top right)	Pneumatic connection	Venting plug*
Double acting	Pneumatic connection	Pneumatic connection
* With piped air outlet: Pneumatic connection. The venting plug is not suitable for IP 67 and is not recommended for damp ambient conditions.		

11.2 Rotary design

Figure 1

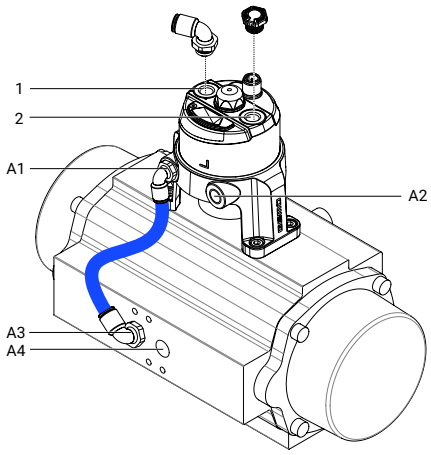

Figure 2, note: The figure shows the attachment options for single acting (NO or NC)

Connection	Marking	Designation	Connection size
1	Marking on the connection	Working connection 1 (with integrated control pressure detection)	**G1/8**
2	(without marking)	Working connection 2 (only double acting)	**G1/8**
A1	A1	Working connection 1 from adapter to quarter turn actuator	**G1/8**
A2	A2	Working connection 2 from adapter to quarter turn actuator (only double acting)	**G1/8**
A3	Dependent on the actuator	Dependent on the actuator	Dependent on the actuator
A4	Dependent on the actuator	Dependent on the actuator	Dependent on the actuator

The product comes with two pneumatic connections (for commercially available 6x4 mm pneumatic tubing) and a venting plug as standard. These are provided as follows:

Control function of valve actuator	Connector 1	Connector 2	Connector A1	Connector A2	Connectors A3 and A4
Single acting (NO or NC) (see figure 2)	Pneumatic connection	Venting plug* (connection not required)	Pneumatic connection	(connection not required)	A pneumatic connection appropriate for the actuator in question must be fitted on the system side (not included in the scope of delivery)
Double acting	Pneumatic connection	Pneumatic connection (not included in the scope of delivery)	Pneumatic connection	Pneumatic connection (not included in the scope of delivery)	A pneumatic connection appropriate for the actuator in question must be fitted on the system side (not included in the scope of delivery)
* With piped air outlet: Pneumatic connection. The venting plug is not suitable for IP 67 and is not recommended for damp ambient conditions.					

Connectors 1, 2, A1 and A2 must be appropriately protected against the penetration of moisture. Unused connectors (for example, connectors 2 and A2 for single acting actuators) should be tightly sealed.

Note: The pneumatic connection can also be made directly with the quarter turn actuator only (A3 and A4). However, this means that the option to record the control pressure via the position indicator and to make internal device diagnoses based on the control pressure is lost. With this connection option, all connectors (1, 2, A1 and A2) must be sealed on the system side.

11.3 Information for use in damp conditions

The following information is intended to help when installing and operating the product in damp conditions.

1. Cables and pipework must be laid so that condensate or rain water that remains on the pipework/cables cannot enter the screw fittings of the product's M12 plugs.
2. Check that all cable glands of the M12 plugs and the fittings are mechanically secured.
3. In case of doubt, the housing protection class should be increased with an exhaust air duct to areas free from moisture (only relevant for single acting process valves). To accomplish this, equip the provided venting connection (spring chamber ventilation) with suitable pneumatic connections to discharge the exhaust air in a targeted manner via a pneumatic line. Ensure that the ventilation line is always depressurized, that it is not operated with throttles, filters or similar components. The ventilation lines must be laid in such a way that moisture cannot flow back.

12 Commissioning

⚠ CAUTION

Hazardous situation!

- ▶ Risk of injury or damage possible.
- For correct commissioning, the product must be calibrated to the process valve via the initialization process. Depending on the specific configuration, this is done automatically the first time the valve moves.
- During this commissioning, the valve must be opened and closed by the application of compressed air on the actuator. It must therefore be ensured in advance that this does not lead to a dangerous situation.

NOTICE

Falsified position determination!

- ▶ Position determination uses Hall effect sensors and an integrated permanent magnet. External magnetic fields can disrupt and falsify the position determination.
- External magnetic fields, for example, permanent magnets near the device, must be completely avoided (wherever possible) or it must be ensured that they are kept at a maximum possible distance.

1. Use suitable connectors.
2. Connect the control medium lines tension-free and without any bends or knots.
3. Connect the pneumatic tubes.
4. Connect the connection cable tension-free and without any bends or knots.
5. Switch on the 24 V DC supply voltage (18 to 30 V DC).
6. Connect the signal lines depending on the required operating mode (not absolutely essential for commissioning at this stage):
7. **IO-Link operation:**
   - ⇨ Connect the communication interface – pin 4: Connect the C/Q cable to a compatible IO-Link master port.
8. **SIO mode (24 V DC signals):**
   - ⇨ Connect digital outputs for open and/or closed end position feedback – connect pin 2 and/or pin 4 to a compatible digital input/signal analyzer.

12.1 Initialization

NOTICE

- For delivery of the product assembled on a valve at the factory, the complete construction is already ready for operation at a control pressure of 5.5 to 6 bar without operating pressure. A reinitialization is recommended if the plant is operated with a different control pressure or if the mechanical end positions have been changed (e.g. seal replacement on the valve or actuator replacement). The initialization is retained even in the event of voltage cutoff.

If initialization has not been carried out beforehand or if the CLOSED and OPEN end positions have not been detected, the product displays a warning (after a short start-up process) (high-visibility LEDs flash alternately orange/red).

The initialization of the end positions is dependent on the setting of the operating parameter (operating mode). A distinction is made between the **autonomous** and **classic** modes for detection of end positions.

In **Autonomous detection of end positions mode** (default setting), the end positions are determined independently as soon as the valve moves. The valve is therefore ready for operation directly, reports the end positions back after an initial complete movement cycle (end position A to end position B and back to A) and shows these via the LED display.

In **classic mode**, the end positions must be calibrated via the active triggering of the initialization process, via a communication interface. If correct initialization has not been carried out, then the device is in a warning state (signalling via the corresponding high-visibility LEDs) (see “Classic initialization process“, page 31).

12.1.1 Autonomous end position process/end position tracking

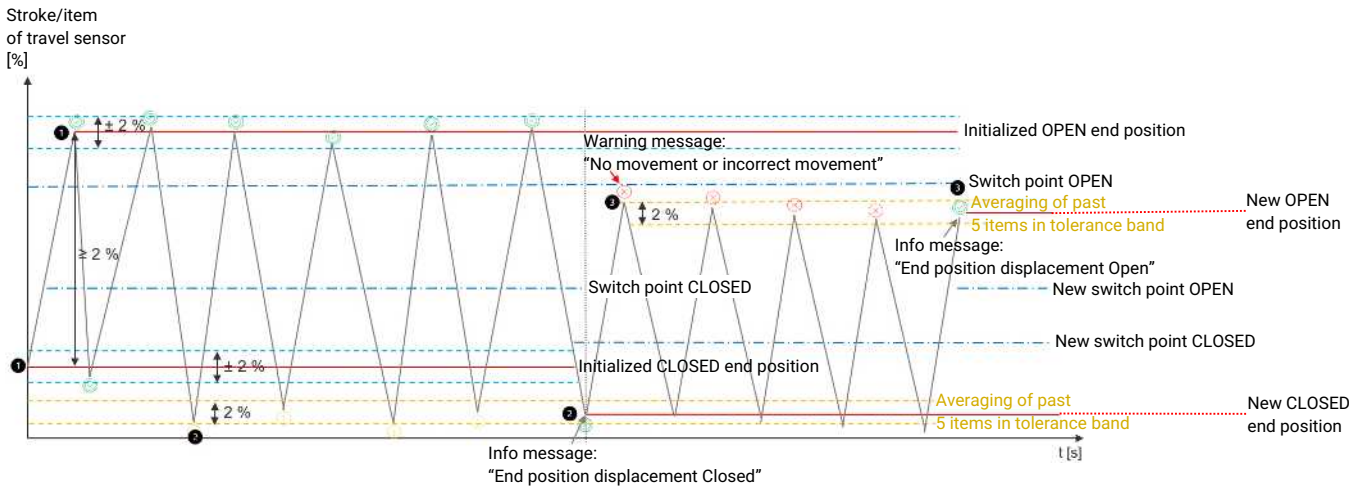

Number 1 in diagram: Without previous end position values, the first two points that are absolutely spaced ≥ 2% apart are calibrated as initialized end positions. Around the initialized open and closed end position values, there is a hysteresis of ± 2%* in which no action takes place. If the OPEN and/or CLOSED end position value is left at > 2% (positive or negative), the effect is dependent on the range

Number 2 in diagram: Within the switch point range: No message (warning) is sent. If a position in a tolerance band of 2% is approached 5x in succession, the mean value is drawn from this and applied as a new end position. An info message that an end position displacement has occurred is sent.

Number 3 in diagram: Outside the switch point range: A warning message [1] "No movement or incorrect movement" is sent immediately. If a position in a tolerance band of 2% is approached 5x in succession, the mean value is calculated and applied as a new end position. The warning message is acknowledged and an info message that an end position displacement has occurred is sent

[1] Diagnostic messages can also be deactivated via a parameter

* relative to the initialized stroke

The autonomous end position process or end position tracking is an intelligent function, with the help of which the end positions of a valve are independently determined (without external triggering). If this function is active, the end positions are automatically determined the first time the valve moves, and the product is ready for operation immediately. The end positions are continuously monitored and responded to accordingly in case of deviations.
Explanation of the functional principle:

In the autonomous end position tracking mode, a distinction is made between two different conditions, which have an influence on the behaviour of the function.

No initialization: The device observes whether two different end positions have been approached at a certain distance. The first two end positions that comply with this condition are calibrated as reinitialized end positions.

Existing initialization: The function determines whether there is a displacement of the end positions over the operating time. If these displacements are outside a certain tolerance range and display a certain consistency, the initialized end positions are overwritten by the adjusted initialization values. If this process is triggered, this is indicated by a corresponding message.

A **classic initialization** can also be carried out with autonomous end position tracking activated. This is recommended after a seal replacement or the like, in order to prevent faulty messages regarding end position changes. If the initialization is successful here, then the currently calibrated end positions are overwritten and the tracking operates against these updated end positions. If the actively triggered initialization process is not successful here, then the most recently calibrated initialization positions are deleted.

12.1.2 Classic initialization process

NOTICE

- ▶ The initialization must be repeated every time that the process valve is changed (for example, seal replacement or operator replacement).

NOTICE

- ▶ The valve must be activated manually in the initialization process (compressed air required).
- ● Prepare everything required before the procedure is started.

12.1.2.1 Implementation via IO-Link

Initialization can be started via the IO-Link process data. Digital device input 3 is set up for this as standard, which can be addressed by process data output bit 2. The operating mode (automatic) is then set automatically.

Process data output bit (Master -> Device) (default setting)*	Logic	Function
2	0	Normal operation
	1	Start initialization

* The function of process data output bit 2 corresponds to the configuration of the parameter: “Digital device input 3 function” -> see 16 Process data

The status of the initialization can be monitored via the IO-Link process data. Digital device output 3 is set up for this as standard, which can be retrieved by process data output bit 2.

Process data input bit (Device -> Master) (default setting)*	Logic	Function
2	0	Normal operation
	1	Initialization active

* The function of process data output bit 2 corresponds to the configuration of the parameter: “Digital device output 3 function” -> see 15.1 Process data

Procedure:

1. Toggle of process data bit (0 -> 1).
   ⇨ High-visibility LEDs indicate “Initialization active” (flashing white/yellow alternately)
2. Open the valve until the end position is reached.
3. Close the valve until the end position is reached.
4. Initialization mode is automatically terminated if the valve does not move for three seconds.
   ⇨ The end positions are set and are displayed via high-visibility LEDs, and electronically fed back.

12.1.2.2 Implementation via 24V DC signal in SIO mode (previous individual configuration required)

Initialization can be started via a brief 24V DC signal at standard IO pin 1. To do this, the configuration of the standard IO pin 1 function parameter must changed beforehand (via a communication interface). The setting value must be set to “Initialization input” (the “end position feedback open” output function configured at the factory cannot be used).

Procedure:

1. At standard IO pin 1 (corresponds to pin 2 of the M12 connector), briefly (>100 ms) apply 24 V DC.
   ⇨ High visibility LEDs indicate “Initialization active” (flashing white/yellow alternately)
2. Open the valve until the end position is reached.
3. Close the valve until the end position is reached.
4. Initialization mode is automatically terminated if the valve does not move for three seconds.
   ⇨ The end positions are set and are displayed via high visibility LEDs, and electronically fed back.

12.1.2.3 Implementation via GEMÜ app

The initialization process must be actively started after establishing a connection with the **GEMÜ app** via the **Initialization** quick-action button.

- ● Call up and start the **Initialization** menu.
  ⇨ After starting initialization, which valve position must be manually approached and at what time is specified.
  ⇨ If a time of > 30 seconds is overwritten without a corresponding interaction with the device having been carried out, then the initialization process is automatically aborted with corresponding feedback.

After implementation of the initialization, the device checks whether the minimum stroke of the calibrated positions has been complied with. If this condition is complied with, then the initialization has been successfully carried out and the end positions have been successfully calibrated.

12.2 Commissioning the type E1B0 Bluetooth module

NOTICE

Electrostatic discharge!

- ▶ Damage to the product.
- ● Ensure that ESD safety precautions are taken.

Please note: The module must be installed and commissioned by an electrician.

1. Make sure that the housing protection of the product is still ensured after installing the type E1B0 Bluetooth module (visually inspecting seals, checking that the type E1B0 Bluetooth module with slider cover is seated correctly, etc.).
2. After installation, the type E1B0 Bluetooth module is automatically supplied with power via the product as soon as it is connected to a power supply.
3. Where there is an existing power supply, the product can be connected to the GEMÜ app.

13 Operation

⚠ WARNING

Hot product!

- ▶ Danger of burns, as the product heats up at the maximum permissible ambient temperature.
- ● Wear protective gloves.

NOTICE

Faulty sealing rings or O-rings!

- ▶ Sudden pressure increase in the product housing due to leakage at the stud bolt sealing ring or pressure sensor O-ring
- ● Carry out product maintenance regularly and pay attention to the integrity of the sealing rings.

The product can be operated either in SIO mode via conventional discrete 24 V DC signals or in IO-Link mode via an IO-Link master. The product automatically recognizes whether IO-Link communication can be established and switches to IO-Link mode accordingly. If this is not the case, SIO mode is activated.

SIO mode (24 V DC signals):

The valve end positions can (in the standard configuration) be monitored via the electrical interface (standard IO pins 1 and 2).
- **Standard IO pin 1**: Reports if the valve is in the OPEN end position
- **Standard IO pin 2**: Reports if the valve is in the CLOSED end position

By evaluating the logic of the two signals (both active), errors and warnings that have occurred in the device can be read out.

The function of the standard IO pins 1 and 2, as well as the error signalling using the two active signals, can be reconfigured or deactivated via a communication interface.

IO-Link mode:

The valve end positions can be monitored in IO-Link operation via process data inputs (Device -> Master).

End position feedback		
Process data input bit (Device -> Master) (default setting)*	Logic	Process valve
0	0	Process valve not in OPEN position
	1	Process valve in OPEN position
1	0	Process valve not in CLOSED position
	1	Process valve in CLOSED position

* The function of process data output bits 0 and 1 corresponds to the configuration of the parameter: “Digital device output 1 function” or “Digital device output 2 function” -> see 15.1 Process data

The percentage valve position can be monitored in IO-Link operation via process data inputs (Device -> Master).

Position feedback		
Process data input bits (Device -> Master)	Value [% to 1 decimal place]	Process valve
8 to 23	0 to 1000	Process valve actual position between 0.0 and 100.0%

An app operating option is additionally available.

Note: The device can be operated without restriction, regardless of whether an app connection is available or not.

13.1 Bluetooth interface

NOTICE

- ▶ Only possible when using the type E1B0 Bluetooth module.

Using an integrated Bluetooth Low Energy interface, the following functions can be used in conjunction with the **GEMÜ app**:

1. Changing the device configuration (parameter settings).
2. Reading out the current device status.
3. Displaying and evaluating historic events.
4. Implementing the initialization.
5. Resetting the device to the default settings.
6. Activating the localization (device detection).
7. Security management (blocking access for a certain group of participants).

NOTICE

- ▶ Only one end device can ever be simultaneously connected to the product. For additional participants, this device is not visible during this period.

After starting the app, all compatible GEMÜ products within range are displayed in the connection list. The product that is to be connected can be referenced via the Bluetooth name. In the condition as supplied to the customer, this corresponds to the last four digits of the 12-digit serial number printed on the

digital product label (8977 in the following example). The Bluetooth name can optionally be changed at any time after the connection is established (maximum 16 characters).

NOTICE

Safety notice!

▶ The default state of the wireless interface is activated and it is ready for connection immediately after the product has been electrically commissioned.

NOTICE

Note on Bluetooth!

▶ The product can be used via the GEMÜ app in its default state as follows:

- **Bluetooth name** = last four digits of the serial number on the digital product label.
- **Bluetooth connection password** = 12-digit serial number or QR code on the digital product label.
- It is recommended that both features are changed to any independent information during commissioning in order to increase access protection! Otherwise, anyone with physical access to the product and the digital product label has access to the above-listed functions!

Digital product label

In the condition as supplied to the customer, the product is protected against unauthorized access using a unique connection password. The password corresponds to the 12-digit printed serial number or the QR code.
To enter the password, this can optionally be read via the camera scan function on the smartphone/tablet or entered manually. The password can be managed independently and set to any other password (it is recommended that this is done directly after commissioning).
By amending the original password, you lose the option to read this via the digital product label. The connection password function can be deactivated, but we do not recommend this.
Furthermore, a configuration lock can be set up for the product using a separate optional password – providing the product with additional protection. If this function is activated, you cannot implement any changes to the settings without first entering the password (read-only mode).
There is an option to reset both passwords if you forget these. The user can define whether one, both or none of the passwords can be reset via the reset mechanism.

Caution! If you forget your passwords and one or both passwords for the reset mechanism are disabled, the product can only be unlocked by GEMÜ.

Caution! If one or both passwords for the reset mechanism are enabled, anyone with access to the digital product label (QR code) can remove the password protection.

Reset mechanism:

There are two options for resetting one of the two passwords (connection or configuration lock password). Both passwords can/must be reset separately from each other.

1. Digital product label (QR code):
   ⇨ By scanning the QR code that is affixed to the product.

NOTICE

▶ A setting parameter can be used to block the reset of one or both passwords.

13.2 Basic operation of the app

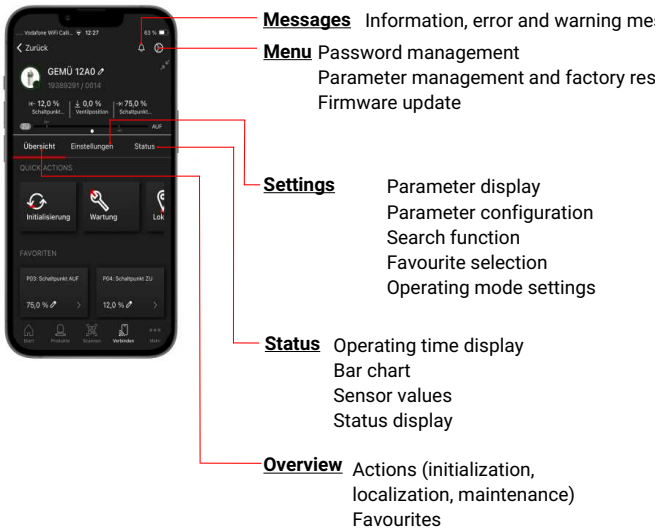

The GEMÜ app comprises multiple function modules that can be accessed via the bottom navigation at the bottom edge of the display.

The functions for operating the product can be found in the “Connect” area. All available GEMÜ products within range are displayed in the connection list. The connection is established by tapping a selected product (usually the connection password must also be entered).

The figure above provides a rough overview of the construction after a connection with a product has been established. You can navigate within the “Connect” area by selecting the “Overview”, “Settings” or “Status” tabs. Important info, error or warning messages can be accessed on all pages via the bell icon. On the overview page, the initialization of the product can be started and executed, among other functions. The menu can be opened via the gear icon. Here, you can change the password settings, reset the product to default settings or update the firmware.

13.3 Sensor system for status monitoring

Various sensors are installed on the device which make it possible to diagnose the status. The measured values are output on the electrical interface(s) and so can be processed. Additionally, for each relevant measured value, warning thresholds are defined that generate a warning or error message when they are not reached or are exceeded. This means that unacceptable influences that would damage the device or reduce its service life can be reacted to in a timely manner.

The following measured values are detected internally:

- Internal temperature
- Internal humidity
- Internal pressure
- Control air supply pressure
- Installation position (in two directions)
- Acceleration (in three axes)
- Current consumption
- Supply voltage

The axes for evaluating the acceleration in the X, Y and Z directions are defined in accordance with the visualisation below.

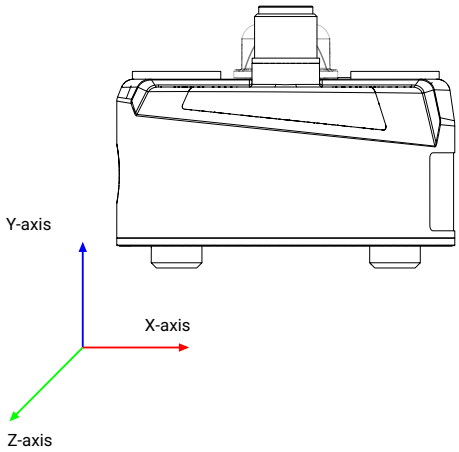

The following correlation is provided in the details of the mounting angles:

- The frontal inclination angle corresponds to the Z axis.
- The side inclination angle corresponds to the X axis.

13.4 Integrated diagnostic functions

GEMÜ 12A0 has integrated diagnostic functions that provide information early on about irregularities in the switch characteristics of pneumatically operated process valves. These diagnostic functions continuously monitor the movements of the actuator and detect deviations from normal operating behaviour.

Operating principle:

During operation, the travel times for each switching movement (Open/Closed) are continuously measured and evaluated. If there is a valid initialization and an activated diagnostic notification (parameter: “Diagnostic messages”), the system automatically detects deviations from typical movement profiles.

This can generate the following messages:

- **“No movement or incorrect movement in the Open/Closed direction”:**
  Signals that no or incomplete movement has taken place (e.g. due to insufficient control pressure or mechanical blockage). It was detected that the position changed away from end position A, but end position B was not reached after the alarm time had elapsed and the position did not change further.
- **“Duration error in the Open/Closed direction”:**
  Indicates an above-average switching time, e.g. in the event of a pressure drop or mechanical resistance. It was detected that the position changed away from end position A. After the alarm time had elapsed, the position continued to change towards end position B, but this position had not yet been reached, or was reached unexpectedly slowly.

The alarm time for the error detection is calculated dynamically using the determined travel time (formula: Current travel time x 2 + 1000 ms). This allows a reliable distinction to be made between normal and faulty conditions. The travel times are continuously recorded during operation. If these are within a comparable percentage range for the same direction (open or closed), the current open and closed travel times are determined or updated from this sequence of travel time measurements.

The end position always refers to the switch point range of the respective end position. The switch points can be changed or set via the parameter: “Switch point Open/Closed”.

Active warning messages are automatically acknowledged as soon as the movements are carried out without fault again or the “Diagnostic messages” parameter is deactivated.

If these diagnostic messages are generated incorrectly or by known, unchangeable external influences, they can be deactivated via the “Diagnostic messages” parameter using IO-Link or the app.

14 Specific data relating to IO-Link

Physics: Physics 2 (3-wire design)

Port configuration: Type A port

Transmission rate: 38400 baud

Min. cycle time: 10 ms

Vendor ID: 401

Device ID: 1220610 (0x12A002)

ISDU support: Yes

SIO operation: Yes

Block parameterization: Yes

IO-Link specification: V1.1.4

Information for IO-Link: IODD files can be downloaded via https://ioddfinder.io-link.com/ or www.gemugroup.com.

15 Process data

Outputs (Master → Device)			
Bit	**Description**	**Default setting function**	**Logic**
0	Digital device input 1	Deactivated	
1	Digital device input 2	Deactivated	
2	Digital device input 3	Initialization input	0 = normal operation 1 = activate initialization
3	Digital device input 4	Localization input	0 = location function inactive 1 = activate location function
4	Digital device input 5	Deactivated	
5	Digital device input 6	Deactivated	
6	Digital device input 7	Deactivated	
7	Digital device input 8	Deactivated	

Device-side digital input signals can be used to start various actions, such as starting initialization/location function The function can be set by the associated non-cyclical parameter data			
Digital device input 1 to 8 function	0	Deactivated	No function
	3	Initialization input	Initialization is activated if this signal is active.
	4	Localization input	The location function is activated if this signal is active.

Inputs (Device → Master)			
Bit	**Description**	**Default setting function**	**Logic**
0	Digital device output 1	OPEN feedback	0 = process valve not in OPEN position 1 = process valve in OPEN position
1	Digital device output 2	CLOSED feedback	0 = process valve not in CLOSED position 1 = process valve in CLOSED position
2	Digital device output 3	Feedback for initialization active	0 = normal operation 1 = initialization mode active
3	Digital device output 4	Deactivated	
4	Digital device output 5	Deactivated	
5	Digital device output 6	Deactivated	
6	Digital device output 7	Deactivated	
7	Digital device output 8	Deactivated	
8 to 23	Analogue device output	Valve position feedback	0.0 to 100.0% valve position

Device-side digital output signals can be used to output various statuses, such as end position feedback/errors/alarms. → The function can be set via the associated non-cyclical parameter data			
Digital device output 1 to 8 function	0	Deactivated	No function
	1	OPEN feedback	Feedback for valve position OPEN
	2	CLOSED feedback	Feedback for valve position CLOSED
	3	Error output	Output if an error is detected
	4	Warning output	Output if a warning is detected
	5	Feedback for initialization active	Feedback when initialization is active

16 IO-Link system commands

System commands can be transmitted via the subindex 0x0002. The following are supported by the device:

Designation	System command	Description
Application Reset	0x81	Resets the technology-specific parameters. This allows the device to be brought into a pre-defined state without interrupting the corresponding communication and without the need for a switch-off cycle.
Back-to-Box	0x83	This function allows the device to be reset to the original parameterization. This command is useful if, for example, a device is removed from an existing plant and reactivated as a spare part. After the command has been executed, IO-Link communication is stopped until the next device start.
Reset Cycle Counter User	0xA2	Resets the user switching cycle counter.

17 Parameter list (IO-Link and GEMÜ app)

NOTICE

▶ All IO-Link parameters that contain sub-indexes can also be addressed in bundles via sub-index 0.

IO-Link parameter								GEMÜ app parameter number	GEMÜ app access	Parameter name	Parameter description	Default setting	Selection values	Description	IO-Link menu	GEMÜ app menu
Index	Subindex	Bit	Access rights	Length	Data type	Data storage	Back-to-Box									
HEX	DEZ															
0x0010	0	0-...	RO	5 bytes	StringT	Yes	No	-	-	**Vendor name**			“GEMUE”	Manufacturer	Identification	-
0x0012	0	0-...	RO	12 bytes	StringT	Yes	No	-	-	**Product name**			“12A0 IO-Link”	Manufacturer-specific device name	Identification	-
0x0013	0		RO	4 bytes	StringT	Yes	No	-	-	**Product ID**			“12A0”	Equipment category	Identification	-
0x0014			RO	18 bytes	StringT	Yes	No	-	-	**Product text**			Electrical position indicator and size recognized by the software (1, 2 or 3)	Product text	Identification	-
0x0015	0	0-...	RO	Variable	StringT	Yes	No	S11	RO	**Serial number**			“RRRRRRRR/IIII” (traceability number and index)	Serial number of the device	Identification	Device status | Other values
0x0016	0	0-...	RO	52 bytes	StringT	Yes	No	S03	RO	**Hardware revision**			“““xxxx/xx yyyy/yy zzzz/zz”” depending on the quantity of circuit boards	0x0016	0	Device status | Other values
0x0017	0	0-...	RO	21 bytes	StringT	Yes	No	S04	RO	**Firmware revision**			“““Vx.x.x.x””	0x0017	0	Device status | Other values
0x0018	0	0-...	RW	32 bytes	StringT	Yes	Yes	-	-	**Application-specific tag**		***	"*** "	Option to define a designation specific to the application	Identification/ tags	-
0x0019	0	0-...	RW	32 bytes	StringT	Yes	Yes	-	-	**Function tag**		***	"*** "	Option to define a functional designation	Identification/ tags	-
0x001A	0	0-...	RW	32 bytes	StringT	Yes	Yes	-	-	**Location tag**		***	"*** "	Option to define a location-specific designation	Identification/ tags	-
0x0024			RO	1 byte	UIntegerT	-	-	-	-	**Device status**				Contains the current status of the device	Diagnostics | Device status	-
0x0025			RO	Variable	ArrayT	-	-	-	-	**Detailed device status**				Detailed list of events for evaluating the device status	Diagnostics | Device status	-
0x0028			RO	3 bytes	UIntegerT	-	-	-	-	**Process data (Device -> Master)**				Process data outputs (display of process data via ISDU)	-	-
0x0029			RO	1 byte	UIntegerT	-	-	-	-	**Process Data (Master -> Device)**				Process data inputs (display of process data via ISDU)	-	-

IO-Link parameter								GEMÜ app parameter number	GEMÜ app access	Parameter name	Parameter description	Default setting	Selection values		Description	IO-Link menu	GEMÜ app menu
Index	Subindex	Bit	Access rights	Length	Data type	Data storage	Back-to-Box										
HEX	DEZ																
0x0042	0		RW	1 byte	RecordT	Yes				Digital device output 1					Digital output 1 configuration	Parameter | Inputs/outputs | Digital outputs	Settings | Inputs/outputs
	1	0–7	RW	8 bits	uint:8	Yes	Yes	P78	R/W	**Digital device output 1 function**	Defines the function of device-side digital output 1	1 (OPEN feedback)	0	Deactivated	No function		
													1	OPEN feedback	Feedback for valve position Open		
													2	Closed feedback	Feedback for valve position Closed		
													3	Error output	Output if an error is detected		
													4	Warning output	Output if a warning is detected		
													5	Operating mode feedback	Feedback of current operating mode		
0x0043	0		RW	1 byte	RecordT	Yes				Digital device output 2					Digital output 2 configuration	Parameter | Inputs/outputs | Digital outputs	Settings | Inputs/outputs
	1	0–7	RW	8 bits	uint:8	Yes	Yes	P79	R/W	**Digital device output 2 function**	Defines the function of device-side digital output 2	2 (CLOSED feedback)		See digital device output 1 for selection values			
0x0044	0		RW	1 byte	RecordT	Yes				Digital device output 3					Digital output 3 configuration	Parameter | Inputs/outputs | Digital outputs	Settings | Inputs/outputs
	1	0–7	RW	8 bits	uint:8	Yes	Yes	P80	R/W	**Digital device output 3 function**	Defines the function of device-side digital output 3	5 (Operating mode feedback)		See digital device output 1 for selection values			
0x0045	0		RW	1 byte	RecordT	Yes				Digital device output 4					Digital output 4 configuration	Parameter | Inputs/outputs | Digital outputs	Settings | Inputs/outputs
	1	0–7	RW	8 bits	uint:8	Yes	Yes	P81	R/W	**Digital device output 4 function**	Defines the function of device-side digital output 4	0 (Deactivated)		See digital device output 1 for selection values			
0x0046	0		RW	1 byte	RecordT	Yes				Digital device output 5					Digital output 5 configuration	Parameter | Inputs/outputs | Digital outputs	Settings | Inputs/outputs
	1	0–7	RW	8 bits	uint:8	Yes	Yes	P82	R/W	**Digital device output 5 function**	Defines the function of device-side digital output 5	0 (Deactivated)		See digital device output 1 for selection values			
0x0047	0		RW	1 byte	RecordT	Yes				Digital device output 6					Digital output 6 configuration	Parameter | Inputs/outputs | Digital outputs	Settings | Inputs/outputs
	1	0–7	RW	8 bits	uint:8	Yes	Yes	P83	R/W	**Digital device output 6 function**	Defines the function of device-side digital output 6	0 (Deactivated)		See digital device output 1 for selection values			
0x0048	0		RW	1 byte	RecordT	Yes				Digital device output 7					Digital output 7 configuration	Parameter | Inputs/outputs | Digital outputs	Settings | Inputs/outputs

IO-Link parameter								GEMÜ app parameter number	GEMÜ app access	Parameter name	Parameter description	Default setting	Selection values		Description	IO-Link menu	GEMÜ app menu
Index	Subindex	Bit	Access rights	Length	Data type	Data storage	Back-to-Box										
HEX	DEZ																
	1	0–7	RW	8 bits	uint:8	Yes	Yes	P84	R/W	**Digital device output 7 function**	Defines the function of device-side digital output 7	0 (Deactivated)		See digital device output 1 for selection values			
0x0049	0		RW	1 byte	RecordT	Yes				Digital device output 8					Digital output 8 configuration	Parameter | Inputs/outputs | Digital outputs	Settings | Inputs/outputs
	1	0–7	RW	8 bits	uint:8	Yes	Yes	P85	R/W	**Digital device output 8 function**	Defines the function of device-side digital output 8	0 (Deactivated)		See digital device output 1 for selection values			
0x004C	0		RW	2 bytes	RecordT	Yes				Standard IO pin 1							
	1	0–7	RW	8 bits	uint:8	Yes	Yes	P60	R/W	**Standard IO pin 1 function**	Defines the function of standard IO pin 1	1 (OPEN feedback)	0	Deactivated			
													1	OPEN feedback			
													2	Closed feedback			
													3	Error output			
													4	Warning output			
													5	Error and warning output			
													6	Operating mode feedback			
													10	Initialization input			
													11	Localization input			
	3	10	RW	1 bit	Boolean	Yes	Yes	P61	R/W	**Standard IO pin 1 logic**	Defines the logic of standard IO pin 2	0 (Active High)	0	Active High			
													1	Active Low			
0x004D	0		RW	2 bytes	RecordT	Yes				Standard IO pin 2					Standard IO pin 2 function configuration	Parameter | Inputs/outputs | SIO pins	Settings | Inputs/outputs
	1	0–7	RW	8 bits	uint:8	Yes	Yes	P62	R/W	**Standard IO pin 2 function**	Defines the function of standard IO pin 2	2 (CLOSED feedback)	0	Deactivated	No function		
													1	OPEN feedback	Feedback for valve position Open		
													2	Closed feedback	Feedback for valve position Closed		
													3	Error output	Output if an error is detected		
													4	Warning output	Output if a warning is detected		
													5	Error and warning output	Output if an error and/or warning is detected		
													6	Operating mode feedback	Feedback of current operating mode		

IO-Link parameter								GEMÜ app parameter number	GEMÜ app access	Parameter name	Parameter description	Default setting	Selection values		Description	IO-Link menu	GEMÜ app menu
Index	Subindex	Bit	Access rights	Length	Data type	Data storage	Back-to-Box										
HEX	DEZ																
	3	10	RW	1 bit	Boolean	Yes	Yes	P63	R/W	**Standard IO pin 2 logic**	Defines the logic of standard IO pin 2	0 (Active High)	0	Active High	The selected function (parameter: “Standard IO pin 2 function”) is output via a 24 V signal at the output		
													1	Active Low	The selected function (parameter: “Standard IO pin 2 function”) is output via a 0 V signal at the output		
0x004F	0		RW	3 bytes	RecordT	Yes				Error configuration						Parameter | Error functions	Settings | Error functions
	1	0–15	RW	16 bits	uint:16	Yes	Yes	P37	R/W	**Error time**	Defines the debounce time in the event of error detection	0.1 s	1 to 1000 (0.1 to 100.0 s)		Defines the debounce time in the event of error detection		
	3	19	RW	1 bit	Boolean	Yes	Yes	P86	R/W	**Diagnostic messages**	Defines whether a warning message needs to be output for time-based diagnostic functions	1 (Activated)	0	Deactivated	Diagnostic messages inactive		
													1	Activated	Diagnostic messages active		
	4	20	RW	1 bit	Boolean	Yes	Yes	P87	R/W	**Error signalling in standard IO mode**	Defines whether an error is signalled in the standard IO mode.	1 (Activated)	0	Deactivated	Error signalling deactivated in standard IO mode		
													1	Activated	Error signalling activated in standard IO mode		
0x0050	0		RW	2 bytes	RecordT	Yes				Basic settings						Parameter | Basic settings	Settings | Display settings
	1	0	RW	1 bit	Boolean	Yes	Yes	P56	R/W	**Inversion of LED colours**	Activates/deactivates the inversion of LED colours for the end position display	0 (Deactivated)	0	Deactivated	OPEN position (green), CLOSED position (orange), moving towards OPEN (flashing green), moving towards CLOSED (flashing orange)		

IO-Link parameter								GEMÜ app parameter number	GEMÜ app access	Parameter name	Parameter description	Default setting	Selection values		Description	IO-Link menu	GEMÜ app menu
Index	Subindex	Bit	Access rights	Length	Data type	Data storage	Back-to-Box										
HEX	DEZ																
													1	Activated	OPEN position (orange), CLOSED position (green), moving towards OPEN (flashing orange), moving towards CLOSED (flashing green)		
	2	1	RW	1 bit	Boolean	Yes	Yes	P43	R/W	**Inversion of the travel sensor signal**	Activates/deactivates inversion of the travel sensor signal	0 (Deactivated)	0	Deactivated	Standard direction of the travel sensor signal		Settings | Initialization settings
													1	Activated	Inversed direction of the travel sensor signal		
	3	2	RW	1 bit	Boolean	Yes	Yes	P51	R/W	**Detection of end positions mode**	Defines the detection of end positions mode	1 (Autonomous)	0	Classic	Detection of end positions via initialization		Settings | Initialization settings
													1	Autonomous	Intelligent detection of end positions with autonomous tracking (recommended)		
	6	5	RW	1 bit	Boolean	Yes	No	-	-	**Bluetooth interface**	Activates/deactivates the Bluetooth interface	1 (Activated)	0	Deactivated	Bluetooth interface inactive		-
													1	Activated	Bluetooth interface active		
	9	8–10	RW	3 bits	uint:3	Yes	Yes	P55	R/W	**High visibility position indicator**	Activates/deactivates the visual end position display	1 (Activated)	0	Deactivated	High visibility LED for position feedback inactive		Settings | Display settings
													1	Activated	High visibility LED for position feedback active		
													2	Dimmed	High visibility LED for position feedback dimmed		
0x0051	0		RW	4 bytes	RecordT	Yes				End position feedback					Configuring the switch points	Parameter | Basic settings | Switch points	Settings | Inputs/outputs
	1	0–15	RW	16 bits	uint:16	Yes	Yes	P53	R/W	**Switch point OPEN**	Defines switch point OPEN	75%	10.0 to 100.0%		The value must be at least 10.0% larger than the set value for switch point CLOSED		

IO-Link parameter								GEMÜ app parameter number	GEMÜ app access	Parameter name	Parameter description	Default setting	Selection values	Description	IO-Link menu	GEMÜ app menu
Index	Subindex	Bit	Access rights	Length	Data type	Data storage	Back-to-Box									
HEX	DEZ															
	2	16–31	RW	16 bits	uint:16	Yes	Yes	P54	R/W	**Switch point CLOSED**	Defines switch point CLOSED	12%	0.0 to 90.0%	The value must be at least 10.0% smaller than the set value for switch point OPEN		
0x0053	0		RO	4 bytes	RecordT	No				Initialized end positions					Observation | Valve information	Device status | Other values
	1	0–15	RO	16 bits	uint:16	No	Yes	S05	RO	**Absolute travel sensor position OPEN**	Displays the valve absolute position for the OPEN end position	0	0 to 1000 (0.0 to 100.0%)			
	2	16–31	RO	16 bits	uint:16	No	Yes			**Absolute travel sensor position CLOSED**	Displays the valve absolute position for the CLOSED end position	0	0 to 1000 (0.0 to 100.0%)			
0x0054	0		RO	2 bytes	RecordT	No				Absolute valve position					Observation | Valve information	Device status | Other values
	1	0–15	RO	16 bits	uint:16	No	No	S60	RO	**Current absolute position**	Displays the absolute position of the travel sensor	0	0 to 1000 (0.0 to 100.0%)	Current valve position in % relative to the total stroke		
0x0056	0		RW	30 bytes	RecordT	No				Counter				Switching cycle counter	Counter readings 1): Observation | Counter readings Warning thresholds 2): Parameter | Counter reading alarm threshold	Device status | Other values
	1	0–31	RO	32 bits	uint:32	No	No	S21	R/W	**User switching cycle counter**	Displays the number of user switching cycles counted	0	0 to 2,147,483,647			
	2	32–63	RO	32 bits	uint:32	No	No	S23	RO	**Total switching cycle counter**	Displays the total number of switching cycles counted	0	0 to 2,147,483,647			
	3	64–95	RW	32 bits	uint:32	Yes	No	S22	R/W	**Warning threshold for user switching cycles**	Defines the warning threshold for user switching cycles	5,000,000	1 to 2,147,483,647	This parameter relates to the parameter “User switching cycle counter”.		
	8	208–239	RO	32 bits	uint:32	No	No	S20	RO	**Device starts counter**	Displays the number of product starts	0	0 to 2,147,483,647	Switching cycle counter		
0x005A	0		RO	8 bytes	RecordT	No				Operating hours				Operating hours counter	Observation | Operating hours	Device status | Operating hours
	1	0–31	RO	32 bits	uint:32	No	No	S70	RO	**Total operating hours**	Displays the total operating hours	0	0 to 2,147,483,647			
	2	32–63	RO	32 bits	uint:32	No	No	S71	RO	**Operating hours since last start**	Displays operating hours at/since the last start	0	0 to 2,147,483,647			

IO-Link parameter								GEMÜ app parameter number	GEMÜ app access	Parameter name	Parameter description	Default setting	Selection values		Description	IO-Link menu	GEMÜ app menu
Index	Subindex	Bit	Access rights	Length	Data type	Data storage	Back-to-Box										
HEX	DEZ																
0x005B	0		RO	40 bytes	RecordT	No				Maintenance indicator					Maintenance information	Diagnostics | Maintenance indicator	Maintenance
	1	0–63	RO	64 bits	TimeT	No	No	S73	R/W	**User time stamp maintenance**	Defines the time stamp for when maintenance was carried out	2025-01-01 00:00:00.000	YYYY-MM-DD HH:MM:SS.SSS		The entry must be actively made by the user. This means that the time of the most recently performed maintenance can be stored.		
	2	64–319	RO	256 bits	StringT	No	No	S74	R/W	**User maintenance information**	Defines additional information about the maintenance performed	***	UTF-8		The entry must be actively made by the user. This means that additional information about the most recently performed maintenance can be stored (e.g. what specifically was maintained and by whom).		
0x0062	0		RO	4 bytes	RecordT	No				Operating times					Operating times	Observation | Valve information	Device status | Other values
	1	0–15	RO	16 bits	uint:16	No	Yes	S09	RO	**Operating time OPEN**	Displays the duration of opening the valve	0	0 to 999 (0.0 to 99.9 s)				
	2	16–31	RO	16 bits	uint:16	No	Yes	S10	RO	**Operating time CLOSED**	Displays the duration of closing the valve	0	0 to 999 (0.0 to 99.9 s)				
0x0064	0		RW	1 byte	RecordT	Yes				Digital device input 1					Digital input 1 configuration	Parameter | Inputs/outputs | Digital inputs	Settings | Inputs/outputs
	1	0–7	RW	8 bits	uint:8	Yes	Yes	P70	R/W	**Digital device input 1 function**		0 (deactivated)	0	Deactivated	No function		
													3	Initialization input	Initialization is activated if this signal is active		
													4	Localization input	The location function is activated if this signal is active		
0x0065	0		RW	1 byte	RecordT	Yes				Digital device input 2					Digital input 2 configuration	Parameter | Inputs/outputs | Digital inputs	Settings | Inputs/outputs
	1	0–7	RW	8 bits	uint:8	Yes	Yes	P71	R/W	**Digital device input 2 function**		0 (deactivated)		See digital device input 1 for selection values			
0x0066	0		RW	1 byte	RecordT	Yes				Digital device input 3					Digital input 3 configuration	Parameter | Inputs/outputs | Digital inputs	Settings | Inputs/outputs
	1	0–7	RW	8 bits	uint:8	Yes	Yes	P72	R/W	**Digital device input 3 function**		3 (Initialization input)		See digital device input 1 for selection values			

IO-Link parameter								GEMÜ app parameter number	GEMÜ app access	Parameter name	Parameter description	Default setting	Selection values	Description	IO-Link menu	GEMÜ app menu
Index	Subindex	Bit	Access rights	Length	Data type	Data storage	Back-to-Box									
HEX	DEZ															
0x0067	0		RW	1 byte	RecordT	Yes				Digital device input 4				Digital input 4 configuration	Parameter | Inputs/outputs | Digital inputs	Settings | Inputs/outputs
	1	0–7	RW	8 bits	uint:8	Yes	Yes	P73	R/W	**Digital device input 4 function**		4 (Localization input)	See digital device input 1 for selection values			
0x0068	0		RW	1 byte	RecordT	Yes				Digital device input 5				Digital input 5 configuration	Parameter | Inputs/outputs | Digital inputs	Settings | Inputs/outputs
	1	0–7	RW	8 bits	uint:8	Yes	Yes	P74	R/W	**Digital device input 5 function**		0 (deactivated)	See digital device input 1 for selection values			
0x0069	0		RW	1 byte	RecordT	Yes				Digital device input 6				Digital input 6 configuration	Parameter | Inputs/outputs | Digital inputs	Settings | Inputs/outputs
	1	0–7	RW	8 bits	uint:8	Yes	Yes	P75	R/W	**Digital device input 6 function**		0 (deactivated)	See digital device input 1 for selection values			
0x006A	0		RW	1 byte	RecordT	Yes				Digital device input 7				Digital input 7 configuration	Parameter | Inputs/outputs | Digital inputs	Settings | Inputs/outputs
	1	0–7	RW	8 bits	uint:8	Yes	Yes	P76	R/W	**Digital device input 7 function**		0 (deactivated)	See digital device input 1 for selection values			
0x006B	0		RW	1 byte	RecordT	Yes				Digital device input 8				Digital input 8 configuration	Parameter | Inputs/outputs | Digital inputs	Settings | Inputs/outputs
	1	0–7	RW	8 bits	uint:8	Yes	Yes	P77	R/W	**Digital device input 8 function**		0 (deactivated)	See digital device input 1 for selection values			
0x0078	0		RO	26 bytes	RecordT	No				Status sensor system				Environment and status sensor system	Diagnostics | Status sensor system	Device status | Sensor system
	1	0–15	RO	16 bits	int:16	No	No	S40	RO	**Internal temperature**	Indicates the measured internal temperature	0	-400 to 1000 (-40.0 °C to 100.0 °C)			
	2	16–31	RO	16 bits	uint:16	No	No	S41	RO	**Internal pressure**	Indicates the measured internal pressure	0	260 to 1260 (260 mbar to 1260 mbar)			
	3	32–47	RO	16 bits	int:16	No	No	S47	RO	**Laterally inclined installation position**	Laterally inclined installation position	0	-180 to 180 (-180° to 180°)			
	4	48–63	RO	16 bits	int:16	No	No	S46	RO	**Frontally inclined installation position**	Frontally inclined installation position	0	-180 to 180 (-180° to 180°)			
	5	64–79	RO	16 bits	int:16	No	No	S48	RO	**Acceleration in X axis**	Acceleration in X axis	0	-15,696 to 15,696 (-156.96 m/s² to 156.96 m/s²)			
	6	80–95	RO	16 bits	int:16	No	No	S49	RO	**Acceleration in Y axis**	Acceleration in Y axis	0	-15,696 to 15,696 (-156.96 m/s² to 156.96 m/s²)			
	7	96–111	RO	16 bits	int:16	No	No	S50	RO	**Acceleration in Z axis**	Acceleration in Z axis	0	-15,696 to 15,696 (-156.96 m/s² to 156.96 m/s²)			
	8	112–127	RO	16 bits	uint:16	No	No	S44	RO	**Supply voltage**	Indicates the measured supply voltage	0	0 to 3600 (0.00 V to 36.00 V)			

IO-Link parameter								GEMÜ app parameter number	GEMÜ app access	Parameter name	Parameter description	Default setting	Selection values	Description	IO-Link menu	GEMÜ app menu
Index	Subindex	Bit	Access rights	Length	Data type	Data storage	Back-to-Box									
HEX	DEZ															
	9	128–143	RO	16 bits	uint:16	No	No	S45	RO	**Current consumption**	Indicates the measured current consumption	0	0 to 375 (0 mA to 375 mA)			
	10	144–159	RO	16 bits	uint:16	No	No	S43	RO	**Internal humidity**	Indicates the measured relative internal humidity	0	0 to 1000 (0.0% to 100.0%)			
	11	160–175	RO	16 bits	uint:16	No	No	S42	RO	**Control air supply pressure**	Indicates the measured supply pressure of the control air	0	0 to 300 (0.0 bar to 30.0 bar)			
0x007A	0		RW	16 bytes	RecordT					Sensor value warning threshold				Sensor value alarm threshold	Parameter | Sensor value alarm threshold	Settings | Diagnostics settings
	1	0–15	RW	16 bits	int:16	Yes	Yes	P89	R/W	**Alarm threshold for min. internal temperature**	Defines the threshold from which an alarm signal will be generated to indicate the internal temperature is too low	-22.0 °C	-400 to 1000 (-40.0 °C to 100.0 °C)	The value must be at least 10.0 °C lower than the set value for the max. alarm threshold.		
	2	16–31	RW	16 bits	int:16	Yes	Yes	P90	R/W	**Alarm threshold for max. internal temperature**	Defines the threshold from which an alarm signal will be generated to indicate the internal temperature is too high	70.0 °C	-400 to 1000 (-40.0 °C to 100.0 °C)	The value must be at least 10.0 °C higher than the set value for the min. alarm threshold.		
	3	32–47	RW	16 bits	uint:16	Yes	Yes	P91	R/W	**Alarm threshold for min. internal humidity**	Defines the threshold from which an alarm signal will be generated to indicate the internal humidity is too low	0.0%	0 to 1000 (0.0% to 100.0%)	The value must be at least 5.0% smaller than the set value for the max. alarm threshold.		
	4	48–63	RW	16 bits	uint:16	Yes	Yes	P92	R/W	**Alarm threshold for max. internal humidity**	Defines the threshold from which an alarm signal will be generated to indicate the internal humidity is too high	100.0%	0 to 1000 (0.0% to 100.0%)	The value must be at least 5.0% larger than the set value for the min. alarm threshold.		

IO-Link parameter								GEMÜ app parameter number	GEMÜ app access	Parameter name	Parameter description	Default setting	Selection values	Description	IO-Link menu	GEMÜ app menu
Index	Subindex	Bit	Access rights	Length	Data type	Data storage	Back-to-Box									
HEX	DEZ															
	5	64–79	RW	16 bits	uint:16	Yes	Yes	P95	R/W	**Alarm threshold for high oscillations**	Defines the threshold above which an alarm signal will be generated to indicate the oscillations are too high	0.0%	0 to 1000 (0.0% to 100.0%)			
	6	80–95	RW	16 bits	uint:16	Yes	Yes	P93	R/W	**Alarm threshold for min. internal pressure**	Defines the threshold from which an alarm signal will be generated to indicate the internal pressure is too low	500 mbar	260 to 1260 (260 mbar to 1260 mbar)	The value must be at least 100 mbar smaller than the set value for the max. alarm threshold.		
	7	96–111	RW	16 bits	uint:16	Yes	Yes	P94	R/W	**Alarm threshold for max. internal pressure**	Defines the threshold from which an alarm signal will be generated to indicate the internal pressure is too high	1230 mbar	260 to 1260 (260 mbar to 1260 mbar)	The value must be at least 100 mbar larger than the set value for the min. alarm threshold.		
	9	120–127	RW	8 bits	uint:8	Yes	Yes	P95	R/W	**Alarm threshold for max. control pressure**	Defines the threshold above which an alarm signal will be generated to indicate the supply pressure of the control air is too high	8.2 bar	0 to 100 (0.0 bar to 10.0 bar)	Sensor value alarm threshold		

18 Troubleshooting

Three different message categories are distinguished between in the device, which suggest faults due to internal or external influences. These are made visible by the high visibility LEDs and output via the electrical interfaces.

Error: The device can no longer properly carry out its functionality. It is imperative that the cause of the error be corrected for continued operation.

Warning: A warning does not affect the operating mode of the device; however, under certain circumstances, it may not carry out the required function. We recommend checking the cause and, if necessary, correcting it.

Information: The status of a temporary function is displayed.

Error message	IO-Link mode	Category	IO-Link Event Code	"Message ID GEMÜ App"	Relevant error time*	Diagnostic message**	Description	Description of measures
Not calibrated	Appear/ Disappear	Error	0x8CA9	1	No	No	The product is not calibrated.	Please send the product to GEMÜ for repair work. To accomplish this, contact your GEMÜ contact person. Further information on this can be found via the product overview in the GEMÜ App under "Maintenance".
Not initialized	Appear/ Disappear	Warning	0x8CAA	2	No	No	The product is not initialized.	- Carry out initialization. - During activated autonomous detection of end positions, both valve end positions must be approached once. - In the classic detection of end positions mode, initialization must be started manually. This can, for instance, be carried out via the button on the product overview in the GEMÜ App. Alternatively, please observe the information in the "Commissioning" chapter of the operating instructions.
End position displacement OPEN	Single Shot	Information	0x8CAB	3	No	No	Autonomous detection of end positions recognizes and updates a displacement of the OPEN end position.	No measures required.
End position displacement CLOSED	Single Shot	Information	0x8CAC	4	No	No	Autonomous detection of end positions recognizes and updates a displacement of the CLOSED end position.	No measures required.

Error message	IO-Link mode	Category	IO-Link Event Code	"Message ID GEMÜ App"	Relevant error time*	Diagnostic message**	Description	Description of measures
Duration error in the OPEN direction	Appear/ Disappear	Warning	0x8CC4	28	No	Yes	The OPEN end position of the process valve has been reached, but not within the expected time	- Ensure that there is an adequate compressed air supply. - Check the pneumatic connections. - Check the pneumatic connection points. - Test the performance of the valve.
Duration error in the CLOSED direction	Appear/ Disappear	Warning	0x8CC5	29	No	Yes	The CLOSED end position of the process valve has been reached, but not within the expected time	- Ensure that there is an adequate compressed air supply. - Check the pneumatic connections. - Check the pneumatic connection points. - Test the performance of the valve.
No movement or incorrect movement towards OPEN	Appear/ Disappear	Warning	0x8CC7	31	No	Yes	The OPEN end position of the process valve is not reached.	- Ensure that there is an adequate compressed air supply. - Check the pneumatic connections. - Check the pneumatic connection points. - Test the performance of the valve.
No movement or incorrect movement towards CLOSED	Appear/ Disappear	Warning	0x8CC8	32	No	Yes	The CLOSED end position of the process valve is not reached.	- Ensure that there is an adequate compressed air supply. - Check the pneumatic connections. - Check the pneumatic connection points. - Test the performance of the valve.

Error message	IO-Link mode	Category	IO-Link Event Code	"Message ID GEMÜ App"	Relevant error time*	Diagnostic message**	Description	Description of measures
Travel sensor error	Appear/ Disappear	Error	0x8CA3	60	No	No	It is not possible to read in a valid signal from the travel sensor.	- Ensure that the mechanical assembly on the valve is correct. - Check all connecting components (e.g. mounting kits, etc.) between the valve and product to ensure that they are being used correctly and in their entirety. - If errors persist, please send the product to GEMÜ for repair work. To accomplish this, contact your GEMÜ contact person. Further information on this can be found via the product overview in the GEMÜ App under "Maintenance".
Travel sensor maximum value exceeded	Appear/ Disappear	Warning	0x8CA4	62	No	No	The travel sensor delivers values above the maximum valid range.	- Ensure that the mechanical assembly on the valve is correct. - Check all connecting components (e.g. mounting kits, etc.) between the valve and product to ensure that they are being used correctly and in their entirety.
Travel sensor minimum value not reached	Appear/ Disappear	Warning	0x8CA5	63	No	No	The travel sensor delivers values below the minimum valid range.	- Ensure that the mechanical assembly on the valve is correct. - Check all connecting components (e.g. mounting kits, etc.) between the valve and product to ensure that they are being used correctly and in their entirety.
Switching cycles alarm threshold reached	Appear/ Disappear	Warning	0x8CF0	72	No	No	The number of switching cycles set in the "User switching cycles warning threshold" parameter has been reached.	- Check the condition of the wearing parts of the valve. Further information on this can be found via the product overview in the GEMÜ App under "Maintenance". - If the condition is faultless, the warning threshold in the "User switching cycles warning threshold" parameter can be adapted.

Error message	IO-Link mode	Category	IO-Link Event Code	"Message ID GEMÜ App"	Relevant error time*	Diagnostic message**	Description	Description of measures
Switching cycle counter reset	Single Shot	Information	0x8CF1	73	No	No	The user switching cycle counter has been reset. The message is independently acknowledged after 30 seconds.	No measures required.
Control air supply pressure exceeded	Appear/ Disappear	Error	0x8D0C	100	No	No	The maximum permissible control pressure has been exceeded	Reduce the control air supply pressure on the product. Unacceptably high control pressures can permanently damage or destroy the product.
Control pressure alarm threshold exceeded	Appear/ Disappear	Warning	0x8D0D	101	Yes	No	The maximum control pressure as set in the "Max. control pressure alarm threshold" parameter has been reached or exceeded.	Reduce the applied control air supply pressure. Alternatively, check the maximum permissible control pressure of the process valve. If this is above the set value in the "Max. control pressure alarm threshold" parameter, this can be increased.
Critical supply voltage	Appear/ Disappear	Error	0x8D15	109	No	No	The maximum permissible supply voltage has been exceeded	Check the power source to ensure that the output voltage has been selected and set correctly. Ensure the power supply is within the permissible range.
Supply voltage exceeded	Appear/ Disappear	Warning	0x8D16	110	Yes	No	The maximum permissible supply voltage will be exceeded soon	Check the power source to ensure that the output voltage has been selected and set correctly. Ensure the power supply is within the permissible range.
Supply voltage not reached	Appear/ Disappear	Error	0x8D17	111	No	No	The minimum permissible supply voltage has not been reached	Check the power source to ensure that the output voltage has been selected and set correctly. Ensure the power supply is within the permissible range.
Internal temperature exceeded	Appear/ Disappear	Error	0x8D1E	118	No	No	The maximum permissible internal temperature has been exceeded	Reduce the ambient temperature at the product's installation site or establish cooler conditions.
Internal temperature has not been reached	Appear/ Disappear	Error	0x8D1F	119	No	No	The minimum permissible internal temperature has not been reached	Increase the ambient temperature at the product's installation site or establish warmer conditions.

Error message	IO-Link mode	Category	IO-Link Event Code	"Message ID GEMÜ App"	Relevant error time*	Diagnostic message**	Description	Description of measures
Internal temperature alarm threshold exceeded	Appear/ Disappear	Warning	0x8D20	120	Yes	No	The maximum temperature as set in the "Max. internal temperature alarm threshold" parameter has been reached or exceeded.	Reduce the ambient temperature at the product's installation site or establish cooler conditions. Alternatively, check the maximum permissible temperature range of the product. If this is above the set value in the "Max. internal temperature alarm threshold" parameter, this can be increased.
Internal temperature alarm threshold has not been reached	Appear/ Disappear	Warning	0x8D21	121	Yes	No	The minimum temperature as set in the "Min. internal temperature alarm threshold" parameter has been reached or undershot.	Increase the ambient temperature at the product's installation site or establish warmer conditions. Alternatively, check the minimum permissible temperature range of the product. If this is below the set value in the "Min. internal temperature alarm threshold" parameter, this can be reduced.
Internal humidity alarm threshold exceeded	Appear/ Disappear	Warning	0x8D22	122	Yes	No	The maximum humidity as set in the "Max. internal humidity alarm threshold" parameter has been reached or exceeded.	- Check that the product housing is fully intact and sealed and that all seals are seated correctly. - Reduce the humidity at the product's installation site or establish dryer conditions. Alternatively, check the maximum permissible humidity range of the product. If this is above the set value in the "Max. internal humidity alarm threshold" parameter, this can be increased.
Internal humidity alarm threshold not reached	Appear/ Disappear	Warning	0x8D23	123	Yes	No	The minimum humidity as set in the "Min. internal humidity alarm threshold" parameter has been reached or undershot.	- Increase the humidity at the product's installation site or establish more humid conditions. Alternatively, check the minimum permissible humidity range of the product. If this is below the set value in the "Min. internal humidity alarm threshold" parameter, this can be reduced.

Error message	IO-Link mode	Category	IO-Link Event Code	"Message ID GEMÜ App"	Relevant error time*	Diagnostic message**	Description	Description of measures
Internal pressure alarm threshold exceeded	Appear/ Disappear	Warning	0x8D24	124	Yes	No	The maximum internal pressure as set in the "Max. internal pressure alarm threshold" parameter has been reached or exceeded.	- Check the product for internal leakages. - Check the height above sea level at the product's installation site. Alternatively, check the maximum permissible internal pressure/ height above sea level of the product. If this is above the set value in the "Max. internal pressure alarm threshold" parameter, this can be increased.
Internal pressure alarm threshold not reached	Appear/ Disappear	Warning	0x8D25	125	Yes	No	The minimum internal pressure as set in the "Min. internal pressure alarm threshold" parameter has been reached or undershot.	Check the height above sea level at the product's installation site. Alternatively, check the minimum permissible internal pressure/ height above sea level of the product. If this is below the set value in the "Min. internal pressure alarm threshold" parameter, this can be reduced.
Vibration alarm threshold exceeded	Appear/ Disappear	Warning	0x8D2A	130	Yes	No	The maximum vibration level as set in the "Alarm threshold for high oscillations" parameter has been reached or exceeded.	- Check the product's installation conditions, specifically for loose screws, fastening components and pipeline fixture mounts. - Check the flow velocity in the piping and, if possible, reduce it. - Check the suitability of the process valve for the prevailing operating parameters.
Warning message memory	Appear/ Disappear	Warning	0x8D70	200	No	No	The memory currently cannot be accessed.	Please send the product to GEMÜ for repair work. To accomplish this, contact your GEMÜ contact person. Further information on this can be found via the product overview in the GEMÜ App under "Maintenance".
Internal error	Appear/ Disappear	Error	0x5000	201	No	No	Internal device error	Please send the product to GEMÜ for repair work. To accomplish this, contact your GEMÜ contact person. Further information on this can be found via the product overview in the GEMÜ App under "Maintenance".

Error message	IO-Link mode	Category	IO-Link Event Code	"Message ID GEMÜ App"	Relevant error time*	Diagnostic message**	Description	Description of measures
Fieldbus communication error	Appear/ Disappear	Error	0x8D75	205	Yes	No	The fieldbus communication was aborted	Fieldbus communication is expected. Check that the communications interface has been wired and configured correctly.
Invalid process data	Appear/ Disappear	Error	-	206	Yes	No	The process data has been set to invalid by the master ("Process Data Output invalid")	The process data marked as invalid by the master triggers an error on the device, which reacts accordingly. Check the master configuration with regard to the status of the process data ("Process Data output validity state").
"Initialization error (Event is only triggered if initialization was started via IO-Link process data)"	Single Shot	Information	0x8DA2	250	No	No	During initialization, an error occurred which caused it to be terminated	- Ensure that the mechanical assembly on the valve is correct. - Check all connecting components (e.g. mounting kits, etc.) between the valve and product to ensure that they are being used correctly and in their entirety. - Ensure that there is an adequate compressed air supply. - Check the pneumatic connections. - Check the pneumatic connection points. - Test the performance of the valve.

*** For error time-relevant messages, a delay time can be set between error detection and response using the "Error time" parameter.**
**** Diagnostic messages can be activated/deactivated together using the associated "Diagnostic messages" parameter.**

19 ISDU errors

This table describes the error codes that can be reported back via the ISDU in the event of unacceptable parameterization.

Designation	Error Code	Additional Code	Description
Index not available	0x80	0x11	Read or write access to a non-existent index.
Subindex not available	0x80	0x12	Read or write access to a non-existent subindex.
Service temporarily not available	0x80	0x20	Read or write access to a parameter is not possible due to the current status of the application.
Service temporarily not available – local control	0x80	0x21	Read or write access to a parameter is not possible due to a local operation on the application, e.g. parameterization via an integrated control panel of the device.

Designation	Error Code	Additional Code	Description
Service temporarily not available – Devicecontrol	0x80	0x22	Read or write access to a parameter is not possible due to a “remote status” of the device, e.g. parameterization via remote access
Access denied	0x80	0x23	Write access to a parameter that can only be read.
Parameter value out of range	0x80	0x30	Write access to a parameter where the parameter value is outside the permitted limits.
Parameter value above limit	0x80	0x31	Write access to a parameter where the parameter value is above the defined limit.
Parameter value below limit	0x80	0x32	Write access to a parameter where the parameter value is below the defined limit.
Parameter length overrun	0x80	0x33	Write access to a parameter where the parameter length is greater than the defined length. This is used, for example, if the data object is too large to be processed by the application.
Parameter length underrun	0x80	0x34	Write access to a parameter where the parameter length is less than the defined length. This is used, for example, if the data object is too small to be processed by the application.
Function not available	0x80	0x35	Write access to a command that is not supported by the application, e.g. a system command that is not supported.
Function temporarily not available	0x80	0x36	Write access to a command that is not supported by the application at this point in time, e.g. a system command that is not currently supported.
Invalid Parameter Set	0x80	0x40	This error is used if a value is transmitted during an individual transmission of ISDU parameters that is non-compliant with another parameter setting.
Inconsistent Parameter Set	0x80	0x41	This error is sent at the end of a download of a block parameter transfer if there is an error in the parameter set, e.g. if there are discrepancies.
Application not ready	0x80	0x82	Read or write access if the application is unavailable.

20 Inspection and maintenance

⚠ WARNING

The equipment is subject to pressure!

- ▶ Risk of severe injury or death
- ● Depressurize the plant or plant component.
- ● Completely drain the plant or plant component.

NOTICE

Faulty sealing rings or O-rings!

- ▶ Sudden pressure increase in the product housing due to leakage at the stud bolt sealing ring or pressure sensor O-ring
- ● Carry out product maintenance regularly and pay attention to the integrity of the sealing rings.

NOTICE

Exceptional maintenance work!

- ▶ Damage to the GEMÜ product
- ● Any maintenance work and repairs not described in these operating instructions must not be performed without consulting the manufacturer first.

The operator must carry out regular visual examinations of the products, depending on the operating conditions and the potentially hazardous situations, in order to prevent leakage and damage.

1. Have servicing and maintenance work performed by trained personnel.
2. Wear appropriate protective gear as specified in the plant operator's guidelines.
3. Disconnect from power supply.
4. Shut off plant or plant component.
5. Secure plant or plant component against recommissioning.
6. Depressurize the plant or plant component.
7. Actuate products that are always in the same position four times a year.

20.1 Spare parts

No spare parts are available for this product. If it is faulty, please return it to GEMÜ for repair.

20.2 Cleaning the product

- Clean the product with a damp cloth.
- Do **not** clean the product with a high pressure cleaning device.

21 Disassembly

21.1 Disassembly of the electrical position indicator

⚠ WARNING

Possible risk of crushing by the indicator spindle!

- ▶ Injury possible, because the actuator must be pressurised in order to reach the flat (only NC drives).
- ● Do not reach into the operating range of the indicator spindle.

NOTICE

- ▶ Do not unscrew the stud bolts 3 and 8 too far or pull them upwards because the sealing washers 5 could come loose and fall down (see "Installing the electrical position indicator (linear actuator)", page 19).
- ● Unscrew the stud bolts alternately (left/right) until the product can be removed from the actuator.

NOTICE

It is possible to touch the electronic system when the product is dismantled!

- ● When disassembling the product, disconnect the power supply.

NOTICE

The pneumatic connections also act as a fixture to the actuator!

- ● Before performing any work on the product, depressurize the pneumatic connection.

1. Disassemble in reverse order to assembly.
2. Unscrew the electrical wiring.
3. Disassemble the product. Observe warning notes and safety information.

21.2 Type E1B0 Bluetooth module disassembly

Observe the separate documentation for the type E1B0 Bluetooth module.

⚠ CAUTION

Hot components!

- ▶ Burns from heated components in conjunction with the ambient temperature
- ● Only work on a plant that has cooled down or with appropriate protective gear.

⚠ CAUTION

Risk of crushing!

- ▶ Pinching of fingers during disassembly/installation of the type E1B0 Bluetooth module in the slider cover or of the type E1B0 Bluetooth module with a slider cover in the housing
- Installation work must only be performed by trained personnel.
- Wear suitable protective gear.

⚠ CAUTION

Risk of cutting injuries!

- ▶ Risk of cutting injuries due to sharp edges, corners or protruding parts
- Installation and disassembly work must only be performed by trained personnel.
- Use suitable cutting protection.

⚠ CAUTION

Minor or moderate injury from a falling product!

- ▶ The type E1B0 Bluetooth module may fall out of the housing if, for example, the snap-in function is defective and the product is installed overhead.
- Check all parts for visual damage.
- If necessary, take safety measures and wear suitable protective gear.
- Cordon off the work area in the plant to ensure that no one can pass through below the product.

NOTICE

Damage to the product!

- Ensure that the module is installed/disassembled correctly and pay attention to any damage to the product.

1. Disassemble in reverse order to assembly.
2. Disassemble the product. Observe warning notes and safety information.

21.2.1 Removing the type E1B0 Bluetooth module

Check all parts for damage, contaminants and moisture prior to disassembly.

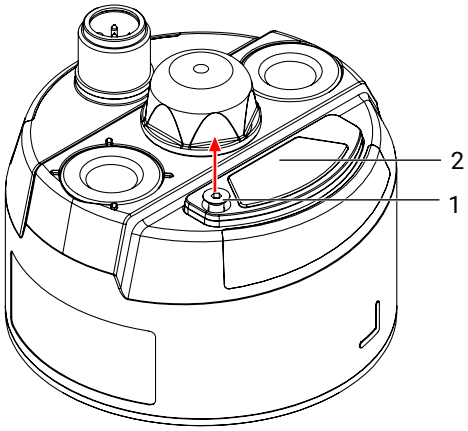

1. Undo the screw **1** (hexagon socket, size 1.5) of the slider cover **2** (the screw is secured against falling out of the slider cover **2** by a circlip).

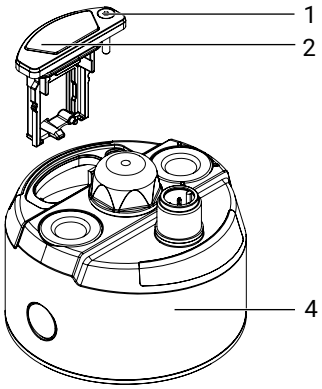

2. Remove the slider cover **2** with the screw **1** from the housing **4**.

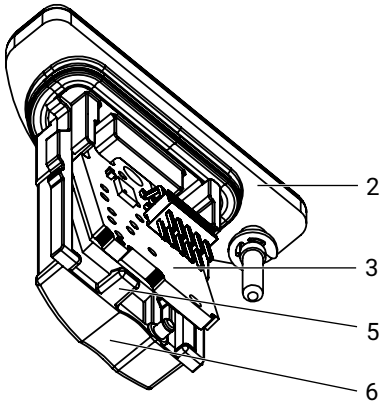

3. Undo the snap hook **5** of the slider cover **2** and use your index finger to pry the type E1B0 Bluetooth module **3** through the recessed handle **6** and out of the slider cover **2** (**do not use a tool** as this may cause damage!).

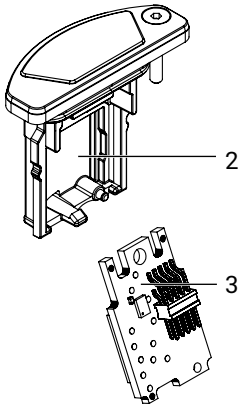

4. Remove the type E1B0 Bluetooth module **3** from the slider cover **2**.
5. Reinstall the slider cover **2** in order to seal the housing of the device **4** (size 1.5 hexagon socket, maximum torque 0.4 Nm/hand tight).
6. Store or dispose of the type E1B0 Bluetooth module properly.

22 Disposal

1. Pay attention to adhered residual material and gas diffusion from penetrated media.
2. Dispose of all parts in accordance with the disposal regulations/environmental protection laws.
3. Dispose of electronic components separately.

23 Returns

Legal regulations for the protection of the environment and personnel require that the completed and signed return delivery note is included with the dispatch documents. Returned goods can be processed only when this note is completed. If no return delivery note is included with the product, GEMÜ cannot process credits or repair work but will dispose of the goods at the operator's expense.

1. Clean the product.
2. Request a return delivery note from GEMÜ.
3. Complete the return delivery note.
4. Send the product with a completed return delivery note to GEMÜ.

24 EU Declaration of Conformity

Version 1

EU-Konformitätserklärung

EU Declaration of Conformity

Wir, die Firma

We, the company

GEMÜ Gebr. Müller Apparatebau GmbH & Co. KG
Gert-Müller-Platz 1
74635 Kupferzell
Deutschland

erklären hiermit in alleiniger Verantwortung, dass die nachfolgend bezeichneten Produkte den Vorschriften der genannten Richtlinien entspricht.

hereby declare under our sole responsibility that the below-mentioned products complies with the regulations of the mentioned Directives.

Produkt: GEMÜ 12A0 Sonderausführung Code X

Product: GEMÜ 12A0 special version Code X

Produktname: Intelligenter elektrischer Stellungsrückmelder

Product name: Intelligent electrical position indicator

Richtlinien/Verordnungen:

Directives/Regulations:

ATEX 2014/34/EU[1)]

Folgende harmonisierte Normen (oder Teile hieraus) wurden angewandt:

The following harmonized standards (or parts thereof) have been applied:

EN 60079-31:2014; EN IEC 60079-0:2018; EN IEC 60079-7:2015/A1:2018

[1)] ATEX 2014/34/EU
Bemerkungen:
Besondere Bedingungen oder Einsatzgrenzen, siehe Kapitel „Bestimmungsgemäße Verwendung“ der Betriebsanleitung.
Explosionsschutzkennung: Gas: Ex II 3G Ex ec IIC T4 Gc X
Explosionsschutzkennung: Staub: Ex II 3D Ex tc IIIC T100°C Dc X

[1)] ATEX 2014/34/EU
Remarks:
For special conditions or limits of use, see chapter ‘Correct use’ in the operating instructions.
Explosion protection designation: Gas: Ex II 3G Ex ec IIC T4 Gc X
Explosion protection designation: Dust: Ex II 3D Ex tc IIIC T100°C Dc X

i.V. M. Barghoorn
Leiter Globale Technik

Ingelfingen, 24.11.2025

GEMÜ Gebr. Müller Apparatebau GmbH & Co. KG
Fritz-Müller-Straße 6-8, 74653 Ingelfingen, Deutschland

www.gemu-group.com
info@gemue.de

25 EU Declaration of Conformity

Version 1.0

EU-Konformitätserklärung

EU Declaration of Conformity

Wir, die Firma

We, the company

GEMÜ Gebr. Müller Apparatebau GmbH & Co. KG
Fritz-Müller-Straße 6-8
74653 Ingelfingen
Deutschland

erklären hiermit in alleiniger Verantwortung, dass die nachfolgend bezeichneten Produkte den Vorschriften der genannten Richtlinien entspricht.

hereby declare under our sole responsibility that the below-mentioned products complies with the regulations of the mentioned Directives.

Produkt: GEMÜ 12A0

Product: GEMÜ 12A0

Produktname: Intelligenter elektrischer Stellungsrückmelder

Product name: Intelligent electrical position indicator

Richtlinien/Verordnungen:

Directives/Regulations:

EMC 2014/30/EU[1)]

Folgende harmonisierte Normen (oder Teile hieraus) wurden angewandt:

The following harmonized standards (or parts thereof) have been applied:

EN 61000-6-2:2005/AC:2005; EN 61000-6-3:2007/A1:2011/AC:2012

Weitere angewandte Normen:

Further applied norms:

EN IEC 61131-9:2022

[1)] EMC 2014/30/EU
Bemerkungen:
Die Schutzziele der EMV-Richtlinie 2014/30/EU sowie der Niederspannungsrichtlinie 2014/35/EU werden durch Anwendung oben genannter harmonisierten Normen, soweit für das Produkt zutreffend, erfüllt.

[1)] EMC 2014/30/EU
Remarks:
The protection objectives of the EMC Directive 2014/30/EU and the Low Voltage Directive 2014/35/EU are met by applying the above-mentioned harmonised standards, where applicable to the product.

i.V. M. Barghoorn
Leiter Globale Technik

Ingelfingen, 18.07.2025

GEMÜ Gebr. Müller Apparatebau GmbH & Co. KG
Fritz-Müller-Straße 6-8, 74653 Ingelfingen, Deutschland

www.gemu-group.com
info@gemue.de

GEMÜ Gebr. Müller Apparatebau GmbH & Co. KG
Gert-Müller-Platz 1, 74635 Kupferzell, Germany
Phone +49 (0) 7940 1230 · info@gemue.de
www.gemu-group.com

Subject to alteration

10.2026 | 88847396