# GEMÜ C60 CleanStar

## Pneumatically operated diaphragm valve

## Features

- All wetted parts made of PFA or PTFE
- High flow rate with low-stress media channelling
- Optional flow direction
- Long service life based on test results and field experience
- Ideally suited for corrosive media
- Optional version with ECTFE union nut and/or with PFA-coated compression springs
- Also available as T valve
- Clean room production, fulfils SEMI F57

## Description

The ultra pure 2/2-way diaphragm valve GEMÜ C60 CleanStar® has a plastic piston actuator and is pneumatically operated. A stroke limiter (not with AG 4) and an optical position indicator are integrated as standard. All media wetted parts are produced from PFA or PTFE (HPW version). For the HPS version, there is a choice of valve bodies made of PP-R, natural or PVDF. This High Purity version of the CleanStar® series complies with the strictest purity standards and boasts high chemical resistance. It can also be used with high media temperatures. As such, it is often used at the supply and distribution level in semiconductor factories.

## Technical specifications

- **Media temperature :** -10 to 150 °C
- **Ambient temperature:** 0 to 60 °C
- **Operating pressure :** 0 to 6 bar
- **Nominal sizes:** DN 4 to 50
- **Body configurations:** 2/2-way bodies I T body I V valve body
- **Connection types:** Flare I Flare SpaceSaver I Nexus Connect® I Nexus Connect® SpaceSaver I PrimeLock® I PrimeLock® SpaceSaver I Spigot I Super 300 Type Pillar® SpaceSaver I Union end I Welded-on Nexus Connect®
- **Connection standards:** DIN
- **Body materials:** PFA I PP-R, natural I PVDF
- **Diaphragm materials:** PTFE/EPDM
- **Conformities:** EAC I FDA I TA Luft (German Clean Air Act)

Technical data depends on the respective configuration

webcode: GW-C60

# CleanStar product line

| | | | | |
|---|---|---|---|---|
| | **GEMÜ C60 Clean-Star PFA** | **GEMÜ C60 Clean-Star PFA 3/5-way** | **GEMÜ C60 Clean-Star PVDF** | **GEMÜ C60 Clean-Star SmartLine** |
| **Operation** | | | | |
| Pneumatic | ● | ● | ● | ● |
| **Nominal sizes** | DN 4 up to 50 | DN 10 up to 15 | DN 15 | DN 10 up to 32 |
| **Media temperature** | -10 up to 150 °C | -10 up to 150 °C | -10 up to 120 °C | -10 up to 80 °C |
| **Connection types** | | | | |
| Butt weld spigot | ● | - | - | ● |
| Flare | ● | ● | - | ● |
| Flare SpaceSaver | ● | - | - | - |
| Nexus Connect® | ● | - | - | - |
| Nexus Connect® SpaceSaver | ● | - | - | - |
| PrimeLock® | ● | - | - | - |
| PrimeLock® SpaceSaver | ● | - | - | - |
| Super 300 Type Pillar® SpaceSaver | ● | - | - | - |
| Tube spigot | ● | - | - | - |
| Union end | - | - | ● | ● |
| Welded-on Nexus Connect® | ● | - | - | - |
| **Body materials** | | | | |
| PFA | ● | ● | - | - |
| PP | - | - | - | ● |
| PVDF | - | - | ● | - |
| **Body configuration** | | | | |
| 2/2-way bodies | ● | - | ● | ● |
| T body | ● | - | - | - |
| V valve body | - | ● | - | - |
| **Conformities** | | | | |
| EAC | ● | ● | ● | ● |
| FDA | ● | ● | ● | ● |
| TA Luft (German Clean Air Act) | ● | ● | ● | ● |

# Product description

| No. | Name | Materials |
|---|---|---|
| 1 | Stroke limiter and optical position indicator | |
| 2 | Actuator | PVDF (body) |
| 3 | Pneumatic connections | |
| 4 | Actuator union nut | PVDF or ECTFE |
| 5 | Union nut connections | PVDF, PFA or CPFA |
| 6 | Lifting lugs | |
| 7 | Leak detection hole | |
| 8 | Valve body | PVDF, PFA or PP-R, natural |
| | Diaphragms (internal) | PTFE (media wetted)/EPDM |

# Designs

## Body configurations

| Body configuration | Description |
|---|---|
| **2/2-way body (code D)**<br> 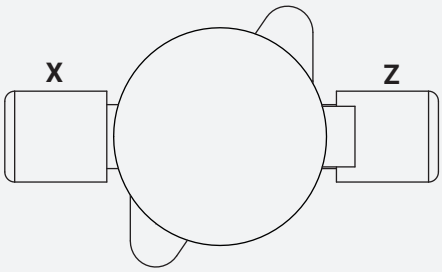 <br> | The 2/2-way body is the most commonly used body configuration. Thanks to the seal created by the weir-style body, the flow direction is freely selectable. Various pipe and tube connections can be connected to the ports, whereby both connections (X and Z) have the same connection size. However, different connection sizes can also be used by attaching corresponding fittings. |
| **T valve body (code T)**<br> 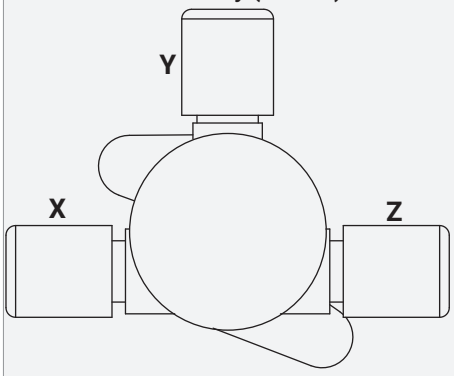 <br> | The T body has 3 connections. The opposing connections (X and Z) are classed as main pipe, as media flows between them at all times, regardless of the position (open/closed) of the actuator. The branch (Y) is located at a 90° angle to the main pipe. The flow across this connection can be influenced via the actuator.<br>T valves are often used when regular analyses of the medium are required. To this end, the branch (Y) is opened briefly to remove a small volume of the medium as and when necessary. T valves are often also installed in a ring main, whereby the medium from the ring main is only released via the Y connection when the actuator is in its open position. |
| **V valve (code V)**<br> 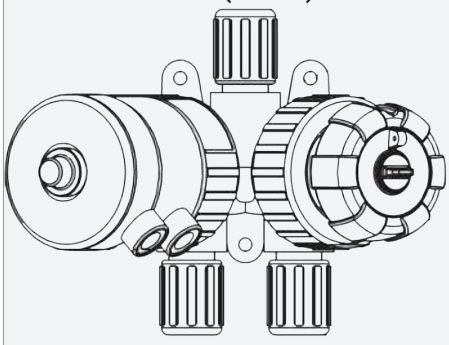 | The V valve body has 3 connections, two of which (X and Z) can be controlled via valve seats. The following flow schemes can therefore be implemented:<br>• Flow between X and Y, as well as between Z and Y (both actuators open)<br>• No flow (both actuators closed)<br>• Flow only between X and Y (one actuator open, one actuator closed)<br>• Flow only between Z and Y (one actuator open, one actuator closed)<br>This diaphragm valve can be configured with two pneumatic and two manual actuators. A combination of both actuator types is also possible.<br>V valves are often used when media need to be mixed at a specific mixing ratio. However, they can also be used to establish redundant media supply or as a mixing valve. |

## Special versions

| | Description |
|---|---|
| **High Flow (code F)**<br> 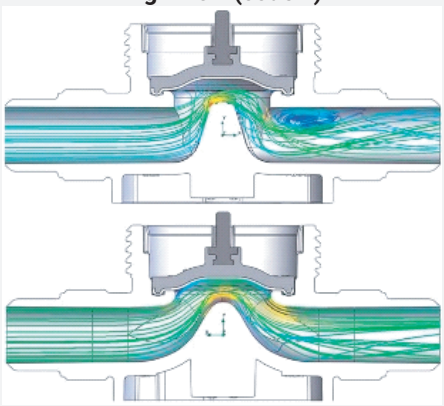 | In actuator sizes 2 and 3, the 2/2-way body is also available in what is known as a High Flow design. This body version has a flow-optimized weir geometry. This reduces the pressure loss and thereby facilitates a higher flow. High Flow valve bodies are often used when higher volume flows are required.<br>The upper image shows a cross-section of a standard version without High Flow. The lower image shows a cross-section of a High Flow design (code F). |
| **ECTFE union nut (code E)**<br> 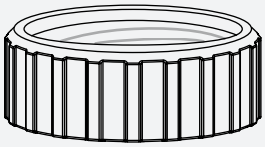 | The central union nut, which connects the actuator to the body via a thread, can optionally be ordered in ECTFE form. This design is used if the outside environment where the valve is used contains alkaline media. In conditions such as these, a central union nut made from ECTFE can offer improved mechanical and chemical resistance. The materials can be distinguished based on their colour. In comparison with the white PVDF material, ECTFE has a slightly darker colour. The material is also uniquely indicated via an arrow on the union nut. |
| **PFA-coated spring (design 7030)**<br> 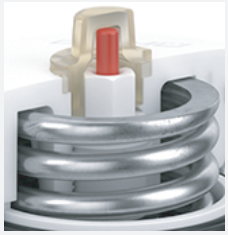 | When operating in an environment that favours corrosion or otherwise impairs the function of metallic parts, use of a pneumatic valve is unavoidable in certain cases. The PFA coating of the spring can therefore make sense, as it helps maintain functionality.<br>**The availability of this option must be checked on request.** |

# GEMÜ C60 CleanStar PFA

## Pneumatically operated diaphragm valve with PFA valve body

## Features

- All wetted parts made of PFA or PTFE
- High flow rate with low-stress media channelling
- Optional flow direction
- Long service life based on test results and field experience
- Ideally suited for corrosive media
- Optional version with ECTFE union nut and/or with PFA-coated compression springs
- Also available as T valve
- Clean room production, fulfils SEMI F57

## Description

The ultra pure 2/2-way diaphragm valve GEMÜ C60 CleanStar® has a plastic piston actuator and is pneumatically operated. A stroke limiter (not with AG 4) and an optical position indicator are integrated as standard. All media wetted parts are produced from PFA or PTFE (HPW version). For the HPS version, there is a choice of valve bodies made of PP-R, natural or PVDF. This High Purity version of the CleanStar® series complies with the strictest purity standards and boasts high chemical resistance. It can also be used with high media temperatures. As such, it is often used at the supply and distribution level in semiconductor factories.

## Technical specifications

- **Media temperature :** -10 to 150 °C
- **Ambient temperature:** 0 to 60 °C
- **Operating pressure :** 0 to 6 bar
- **Nominal sizes:** DN 4 to 50
- **Body configurations:** 2/2-way bodies I T body
- **Connection types:** Butt weld spigot I Flare I Flare SpaceSaver I Nexus Connect® I Nexus Connect® SpaceSaver I PrimeLock® I PrimeLock® SpaceSaver I Super 300 Type Pillar® SpaceSaver I Tube spigot I Welded-on Nexus Connect®
- **Connection standards:** DIN
- **Body materials:** PFA
- **Diaphragm materials:** PTFE/EPDM
- **Conformities:** EAC I FDA I TA Luft (German Clean Air Act)

Technical data depends on the respective configuration

# Availability C60 PFA

## Body configuration - 2/2-way body (code D)

### Materials

| International code | DN | Connection size X, Z | Connection type (code) [1] | | |
|---|---|---|---|---|---|
| | | | 30 | NX | 73, 75, 77, PL, T3 |
| | | | PFA material (code 30) | | |
| **4** | **4** | 1/4” tube | - | X | X |
| | **10** | 1/4” pipe | X | - | - |
| **6** | **6** | 3/8” tube | - | X | X |
| **8** | **10** | 1/2” tube | - | X | X |
| | **15** | 1/2” pipe | X | - | - |
| **12** | **15** | 3/4” tube | - | X | X |
| | **20** | 3/4” pipe | X | - | - |
| **16** | **20** | 1” tube | - | X | X |
| | **25** | 1” pipe | X | - | - |
| **20** | **25** | 1¼” tube | - | X | X |
| **24** | **40** | 1½” pipe | X | - | - |
| | **40** | 1½” tube | - | X | - |
| **32** | **50** | 2” pipe | X | - | - |

1) **Connection type**
Code 30: Spigot – inch, for welding or solvent cementing, depending on the body material
Code 73: Flare connection with CPFA union nut
Code 75: Flare connection with PVDF union nut
Code 77: Flare connection with PFA union nut
Code NX: Nexus Connect connection with PFA union nut
Code PL: PrimeLock connection
Code T3: Tube spigot

# Connections

## Body configuration - 2/2-way body (code D)

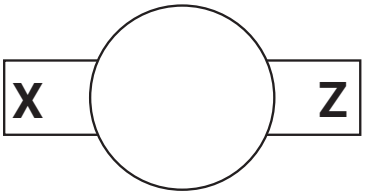


Connection type Flare (code 73, 75, 77)

| Actuator size (code) | Connection size (code) | SpaceSaver position | | | |
|---|---|---|---|---|---|
| | | None | On one side Pos. X | On one side Pos. Z (code Z) | On both sides Pos. X, Z (code S) |
| 1, 1E | 4 | X | On request | X | - |
| | 6 | X | On request | X | - |
| 2, 2E | 8 | X | On request | X | X |
| | 12 | X | On request | X | X |
| 3, 3E | 12 | X | On request | X | X |
| | 16 | X | On request | X | X |
| | 20 | X | On request | X | X |

Connection type Flare (code 73, 75, 77) – High Flow design

| Actuator size (code) | Connection size (code) | SpaceSaver position | | | |
|---|---|---|---|---|---|
| | | None | On one side Pos. X | On one side Pos. Z (code Z) | On both sides Pos. X, Z (code S) |
| 2 F, 2EF | 12 | X | On request | - | - |
| 2 F, 2EF | 16 | X | On request | - | - |
| 3 F, 3EF | 16 | X | On request | - | - |
| 3 F, 3EF | 20 | X | On request | X | X |

Butt weld spigot connection type (code 30)

| Actuator size (code) | Connection size X, Z (code) | Butt weld spigot | |
|---|---|---|---|
| | | On both sides | On one side, pos. Z |
| 1, 1E | 4 | X | - |
| 2, 2E | 8 | X | X |
| 2, 2E | 12 | X | X |
| 3, 3E | 12 | X | X |
| 3, 3E | 16 | X | X |
| 4, 4E | 24 | X | - |
| 4, 4E | 32 | X | - |

Connection type butt weld spigot (code 30) - High Flow design

| Actuator size (code) | Connection size X, Z (code) | Butt weld spigot | |
|---|---|---|---|
| | | On both sides | On one side, pos. Z |
| 2 F | 8 | X | - |
| 2 F | 12 | X | - |
| 3 F | 16 | X | - |

**Connection type Flare in pos. X, butt weld spigot in pos. Z (code K)**

| Actuator size (code) | Actuator size (code) | Connection type (code) | |
|---|---|---|---|
| | | 73, 75, 77 | 30 |
| | | On one side, pos. X | On one side, pos. Z |
| 2, 2E | 8 | X | X |
| 2, 2E | 12 | X | X |
| 3, 3E | 12 | X | X |
| 3, 3E | 16 | X | X |

**Connection type Flare in pos. X, butt weld spigot in pos. Z (code K) – High Flow design**

| Actuator size (code) | Actuator size (code) | Connection type (code) | |
|---|---|---|---|
| | | 73, 75, 77 | 30 |
| | | On one side, pos. X | On one side, pos. Z |
| 2 F, 2EF | 12 | X | X |
| 2 F, 2EF | 16 | X | X |
| 3 F, 3EF | 16 | X | X |

**PrimeLock® connection type (code PL)**

| Actuator size (code) | Connection size (code) | Pos. SpaceSaver |
|---|---|---|
| | | Without |
| 1, 1E | 4 | X |
| | 6 | X |
| 2, 2E | 8 | X |

**PrimeLock® (code PL) connection type – High Flow design**

| Actuator size (code) | Connection size (code) | Pos. SpaceSaver |
|---|---|---|
| | | Without |
| 2 F, 2EF | 12 | X |
| | 16 | X |
| 3 F, 3EF | 16 | X |
| | 20 | X |

**Connection type tube spigot (code T3)**

| Actuator size (code) | Connection size (code) | SpaceSaver position |
|---|---|---|
| | | None |
| 1, 1E | 6 | X |
| 2, 2E | 8 | X |
| | 12 | X |
| 3, 3E | 16 | X |

**Connection type tube spigot (code T3) – High Flow design**

| Actuator size (code) | Connection size (code) | SpaceSaver position |
|---|---|---|
| | | None |
| 3 F, 3EF | 20 | X |

**Nexus Connect® connection type (code NX) – Standard (1, 2, 3, 4), High Flow design (2F, 3F)**

| Actuator size (code) | Connection size | Connection | | |
|---|---|---|---|---|
| | | On both sides | | |
| | X, Z | Injected | Welded | SpaceSaver |
| 1, 1E | 1/4" | X | - | X |

| Actuator size (code) | Connection size | Connection | | |
|---|---|---|---|---|
| | | On both sides | | |
| | X, Z | Injected | Welded | SpaceSaver |
| **1, 1E** | **3/8"** | X | - | X |
| **2, 2E** | **1/2"** | X | - | X |
| | **3/4"** | X | - | - |
| **2F, 2EF** | **3/4"** | - | - | X |
| | **1"** | - | - | - |
| **3F, 3EF** | **3/4"** | X | - | - |
| | **1"** | X | - | X |
| | **1 ¼"** | - | X | - |
| **3, 3E** | **1 ¼"** | - | X | - |
| **4, 4E** | **1 ½"** | - | X | - |

## *Body configuration - T body (code T)*

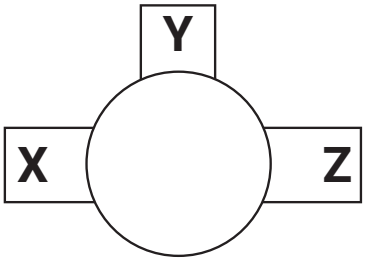


X-->Z: Main pipe
(Flow even when valve is closed)
X-->Y: Branch
(Flow only when valve is open)

**Flare connection type (code 73, 75, 77)**

| Actuator size (code) | Connection size X, Z (code) | Connection size Y (code) | Space saver position | | | | |
|---|---|---|---|---|---|---|---|
| | | | Without | X | Y | Z | X, Z (code S) |
| 1, 1E | 6 | 4 | X | - | - | - | - |
| | 6 | 6 | X | - | - | - | - |
| | 8 | 6 | X | - | - | X | - |
| | 12 | 6 | X | - | - | X | - |
| 2, 2E | 8 | 8 | X | X | X | X | - |
| | 12 | 8 | X | X | X | X | X |
| | 12 | 12 | X | X | X | X | - |
| | 16 | 8 | X | X | - | X | X |
| | 16 | 12 | X | X | - | X | - |
| 3, 3E | 16 | 16 | X | X | - | - | - |
| | 20 | 8 | X | - | - | X | - |
| | 20 | 12 | X | - | - | - | - |
| | 20 | 16 | X | - | - | - | - |
| | 20 | 20 | X | - | - | X | - |

**Butt weld spigot connection type (code 30)**

| Actuator size (code) | Connection size X, Z (code) | Connection size Y (code) | Butt weld spigot, pos. X, Y, Z | Butt weld spigot, pos. X, Z | |
|---|---|---|---|---|---|
| | | | | Space saver, pos. Y | Flare connection, pos. Y |
| 1, 1E | 4 | 4 | X | - | - |
| | 8 | 4 | X | - | - |
| 2, 2E | 8 | 8 | X | X | - |
| | 12 | 8 | X | - | - |
| | 12 | 8 | X | - | X |
| | 12 | 12 | - | - | X |
| 3, 3E | 16 | 8 | X | - | X |
| | 16 | 12 | X | - | - |
| | 16 | 16 | X | - | X |

# Order data C60 PFA

## Order data - body configuration - 2/2-way body (code D)

### Order codes

The order data provide an overview of standard configurations.

Please check the availability before ordering. Other configurations available on request.

| 1 Type | Code |
|---|---|
| Diaphragm valve, pneumatically operated,<br>plastic piston actuator,<br>optical position indicator,<br>stroke limiter (for actuator size 1–3 only) | C60 |

| 2 SpaceSaver position | Code |
|---|---|
| Without | |
| Flare connection in position X,<br>butt weld spigot in position Z | K |
| SpaceSaver for X+ Z position | S |
| SpaceSaver for Z position | Z |

| 3 Connection size | Code |
|---|---|
| 1/4", international code: 4 | 4 |
| 3/8", international code: 6 | 6 |
| 1/2", international code: 8 | 8 |
| 3/4", international code: 12 | 12 |
| 1", international code: 16 | 16 |
| 1 1/4", international code: 20 | 20 |
| 1 1/2", international code: 24 | 24 |
| 2", international code: 32 | 32 |

| 4 Housing configuration | Code |
|---|---|
| 2/2-way body | D |

| 5 Connection type | Code |
|---|---|
| **Tube** | |
| Flare connection with CPFA union nut | 73 |
| Flare connection with PVDF union nut | 75 |
| Flare connection with PFA union nut | 77 |
| Nexus Connect connection with PFA union nut | NX |
| PrimeLock connection | PL |
| Tube spigot | T3 |
| **Pipe** | |
| Spigot – inch,<br>for welding or solvent cementing, depending on the body material | 30 |

| 6 Valve body material | Code |
|---|---|
| PFA, perfluoroalkoxy | 30 |

| 7 Diaphragm material | Code |
|---|---|
| PTFE/EPDM one-piece | 54 |
| PTFE/EPDM two-piece | 5M |

| 8 Control function | Code |
|---|---|
| Normally closed (NC) | 1 |
| Normally open (NO) | 2 |

| 9 Actuator version | Code |
|---|---|
| **Standard version** | |
| Actuator size 1 | 1 |
| Actuator size 2 | 2 |
| Actuator size 3 | 3 |
| Actuator size 4 | 4 |
| **Standard version with ECTFE union nut** | |
| Actuator size 1,<br>with ECTFE union nut | 1E |
| Actuator size 2,<br>with ECTFE union nut | 2E |
| Actuator size 3,<br>with ECTFE union nut | 3E |
| Actuator size 4,<br>with ECTFE-union nut, maximum operating temperature 60 °C | 4E |
| **High Flow design** | |
| Actuator size 2 High Flow | 2 F |
| Actuator size 3 High Flow | 3 F |
| **High Flow design with ECTFE union nut** | |
| Actuator size 2 High Flow,<br>with ECTFE union nut | 2EF |
| Actuator size 3 High Flow,<br>with ECTFE union nut | 3EF |

| 10 Type of design | Code |
|---|---|
| Without | |
| CleanStar with welded-on Nexus Connect fitting | 2591 |
| C60, spring, PFA-coated<br>(on request) | 7030 |

| 11 High Purity version | Code |
|---|---|
| High Purity, white | HPW |

## Order example

| Ordering option | Code | Description |
|---|---|---|
| 1 Type | C60 | Diaphragm valve, pneumatically operated,<br>plastic piston actuator,<br>optical position indicator,<br>stroke limiter (for actuator size 1–3 only) |
| 2 SpaceSaver position | Z | SpaceSaver for Z position |
| 3 Connection size | 8 | 1/2”, international code: 8 |
| 4 Housing configuration | D | 2/2-way body |
| 5 Connection type | 75 | Flare connection with PVDF union nut |
| 6 Valve body material | 30 | PFA, perfluoroalkoxy |
| 7 Diaphragm material | 54 | PTFE/EPDM one-piece |
| 8 Control function | 1 | Normally closed (NC) |
| 9 Actuator version | 2 | Actuator size 2 |
| 10 Type of design | | Without |
| 11 High Purity version | HPW | High Purity, white |

# Order data - body configuration - T body (code T)

## Order codes

The order data provide an overview of standard configurations.

Please check the availability before ordering. Other configurations available on request.

| 1 Type | Code |
|---|---|
| Diaphragm valve, pneumatically operated,<br>plastic piston actuator,<br>optical position indicator,<br>stroke limiter (for actuator size 1–3 only) | C60 |

| 2 SpaceSaver position | Code |
|---|---|
| Without | |
| SpaceSaver for Y position | Y |

| 3 Connection size | Code |
|---|---|
| **Position Y** | |
| 1/4”, international code: 4 | 4 |
| 3/8”, international code: 6 | 6 |
| 1/2”, international code: 8 | 8 |
| 3/4”, international code: 12 | 12 |
| 1”, international code: 16 | 16 |
| 1 1/4”, international code: 20 | 20 |

| 4 Housing configuration | Code |
|---|---|
| T body | T |

| 5 Connection type | Code |
|---|---|
| **Tube** | |
| Flare connection with CPFA union nut | 73 |
| Flare connection with PVDF union nut | 75 |
| Flare connection with PFA union nut | 77 |
| **Pipe** | |
| Spigot – inch,<br>for welding or solvent cementing, depending on the body material | 30 |

| 6 Valve body material | Code |
|---|---|
| PFA, perfluoroalkoxy | 30 |

| 7 Diaphragm material | Code |
|---|---|
| PTFE/EPDM one-piece | 54 |

| 8 Control function | Code |
|---|---|
| Normally closed (NC) | 1 |
| Normally open (NO) | 2 |

| 9 Actuator version | Code |
|---|---|
| **Standard version** | |
| Actuator size 1 | 1 |
| Actuator size 2 | 2 |
| Actuator size 3 | 3 |
| **Standard version with ECTFE union nut** | |
| Actuator size 1,<br>with ECTFE union nut | 1E |

| 9 Actuator version | Code |
|---|---|
| Actuator size 2,<br>with ECTFE union nut | 2E |
| Actuator size 3,<br>with ECTFE union nut | 3E |

| 10 SpaceSaver 2 position | Code |
|---|---|
| SpaceSaver for X position | X |
| SpaceSaver for Z position | Z |
| SpaceSaver for X+ Z position | S |

| 11 Connection size 2 | Code |
|---|---|
| **Position X and Z** | |
| 1/4”, international code-2: 4 | 4 |
| 3/8”, international code-2: 6 | 6 |
| 1/2”, international code-2: 8 | 8 |
| 3/4”, international code-2: 12 | 12 |
| 1”, international code-2: 16 | 16 |
| 1 1/4”, international code-2: 20 | 20 |

| 12 Connection type, spigot 2 | Code |
|---|---|
| **Tube** | |
| Flare connection with CPFA union nut | 73 |
| Flare connection with PVDF union nut | 75 |
| Flare connection with PFA union nut | 77 |
| **Pipe** | |
| Spigot – inch,<br>for welding or solvent cementing, depending on the body material | 30 |

| 13 Type of design | Code |
|---|---|
| Without | |
| C60, spring, PFA-coated<br>(on request) | 7030 |

| 14 High Purity version | Code |
|---|---|
| High Purity, white | HPW |

## Order example

| Ordering option | Code | Description |
|---|---|---|
| 1 Type | C60 | Diaphragm valve, pneumatically operated,<br>plastic piston actuator,<br>optical position indicator,<br>stroke limiter (for actuator size 1–3 only) |
| 2 SpaceSaver position | Y | SpaceSaver for Y position |
| 3 Connection size | 8 | 1/2”, international code: 8 |
| 4 Housing configuration | T | T body |
| 5 Connection type | 75 | Flare connection with PVDF union nut |
| 6 Valve body material | 30 | PFA, perfluoroalkoxy |
| 7 Diaphragm material | 54 | PTFE/EPDM one-piece |
| 8 Control function | 1 | Normally closed (NC) |
| 9 Actuator version | 2 | Actuator size 2 |
| 10 SpaceSaver 2 position | Z | SpaceSaver for Z position |
| 11 Connection size 2 | 8 | 1/2”, international code-2: 8 |
| 12 Connection type, spigot 2 | 75 | Flare connection with PVDF union nut |
| 13 Type of design | | Without |
| 14 High Purity version | HPW | High Purity, white |

# Technical data C60 PFA

## Medium

**Working medium:** Gaseous and liquid media (specified in the table below based on nominal size) – in particular high-purity media – which have no negative impact on the physical and chemical properties of the body and diaphragm material. Inert gases are excluded.

**Categorisation**

| Max. permissible operating pressure (PS) | Permissible working media/fluids acc. to nominal size | | | |
|---|---|---|---|---|
| | Group 1 fluids (hazardous) | | Group 2 fluids (other) | |
| | Gases (diagram 6) | Liquids (diagram 8) | Gases (diagram 7) | Liquids (diagram 9) |
| **6 bar** | Up to max. 1”/DN25 | > 1”/DN25 | | |

## Temperature

**Media temperature:** PFA valve body material (code 30): -10 — 150 °C
Observe pressure/temperature diagram

**Ambient temperature:** 0 — 60 °C

**Storage temperature:** 0 — 40 °C

## Pressure

**Operating pressure:** 0 — 6 bar
applied upstream

**Pressure/temperature diagram:**

**Valve body material: PFA (code 30), actuator sizes 1, 2 and 3**

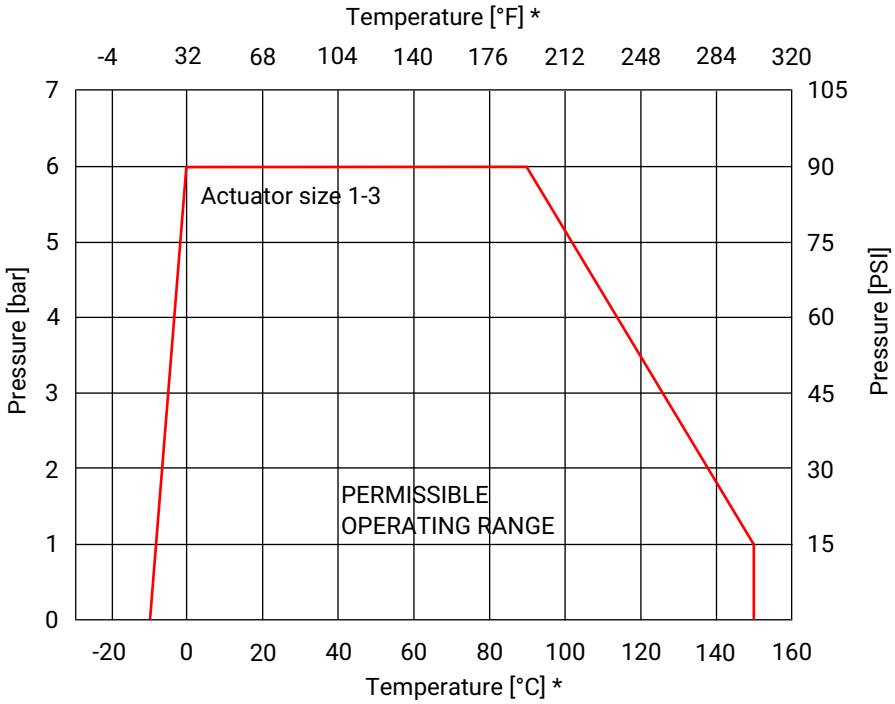


**Valve body material: PFA (code 30), actuator sizes 4, 4E**

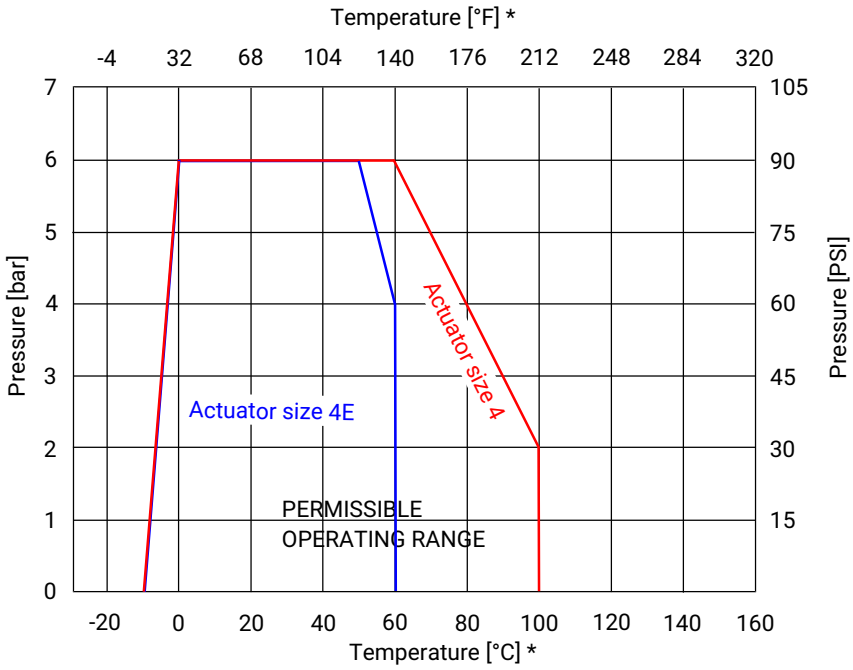


*** Note:** The temperature/pressure diagram is only an aid. The data refers to water as a working medium. A change of operating conditions or other media may result in deviations. In case of doubt, it is advisable to test the behaviour of the material under the definitive operating conditions in a test installation.
Temperatures below 0 °C can have a negative influence on the actuation speed.
The pressure-bearing valve bodies are designed to maintain their functionality unchanged for a theoretical time period of 25 years. Continuously rising medium temperatures would change this time period as follows:

- 24.4 years at 110 °C
- 8.2 years at 120 °C
- 3.4 years at 130 °C
- 1.4 years at 140 °C
- 1.0 year at 150 °C

**Kv values:**

**Body configuration – 2/2-way body (code D)**

| Actuator size (code) | Connection size | Connection | |
|---|---|---|---|
| | | On both sides | |
| | X, Z | Tube connectors moulded on | Pipe connection |
| **1, 1E** | 1/4" | 4.0 | 15.0 |
| | 3/8" | 15.0 | - |
| **2, 2E** | 1/2" | 35.0 | 68.0 |
| | 3/4" | 68.0 | 68.0 |
| **3, 3E** | 3/4" | 68.0 | 126.0 |
| | 1" | 158.0 | 175.0 |
| | 1¼" | 170.0 | - |
| **4, 4E** | 1½ " | - | 1225.0 |
| | 2" | - | 1225.0 |

Kv values in l/min

If the 2/2-way body has a tube and pipe connection, the Kv values of the tube connection are used.

**Body configuration - 2/2-way body (code D) – High Flow design**

| Actuator size (code) | Connection size | Connection | |
|---|---|---|---|
| | | On both sides | |
| | X, Z | Tube connectors moulded on | Pipe connection |
| **2 F, 2EF** | 1/2" | - | 115.0 |
| | 3/4" | 115.0 | 115.0 |
| | 1" | 123.0 | 123.0 |
| **3 F, 3EF** | 1" | 316.0 | 316.0 |
| | 1¼" | 325.0 | - |

Kv values in l/min

**Body configuration – 2/2-way body (code D) – Nexus Connect® connection type (code NX)**

| Actuator size (code) | Connection size | Connection | |
|---|---|---|---|
| | | On both sides | |
| | X, Z | Connection welded on | SpaceSaver |
| **1** | **1/4"** | 7.82 | - |
| | **3/8"** | 13.0 | 13.3 |
| **2** | **1/2"** | 48.1 | 35.2 |
| | **3/4"** | 66.3 | - |
| **2F** | **3/4"** | - | 110.0 |
| **3** | **1"** | 142.0 | - |
| | **1 1/4"** | 142.0 | - |
| **3F** | **1"** | - | 255.0 |
| **4, 4E** | **1 1/2"** | 800.0 | - |

Kv values in l/min

**Kv values:**

Body configuration - T body (code T)

| Actuator size (code) | Connection size | | Connection | | |
|---|---|---|---|---|---|
| | | | On both sides at main pipe (X, Z) and branch (Y) | | One side |
| | Main pipe X, Z | Branch Y | Tube connec-tion | Pipe connec-tion | Pipe/tube con-nection |
| **1, 1E** | 1/4" | 1/4" | - | 17.0 | - |
| | 3/8" | 1/4" | 4.0 | - | - |
| | 3/8" | 3/8" | 13.0 | - | - |
| | 1/2" | 1/4" | - | 18.0 | - |
| | 1/2" | 3/8" | 17.0 | - | - |
| | 3/4" | 3/8" | 18.0 | - | - |
| **2, 2E** | 1/2" | 1/2" | 28.0 | 62.0 | 36.0 |
| | 3/4" | 1/4" | - | 35.0 | - |
| | 3/4" | 1/2" | 35.0 | 38.0 | 38.0 |
| | 3/4" | 3/4" | 62.0 | 71.0 | - |
| | 1" | 1/2" | 38.0 | 101.0 | - |
| | 1" | 3/4" | 71.0 | - | - |
| **3, 3E** | 1" | 1" | 137.0 | 135.0 | 145.0 |
| | 1" | 1/2" | - | 101.0 | 42.0 |
| | 1" | 3/4" | - | 130.0 | - |
| | 1¼" | 1/2" | 53.0 | - | - |
| | 1¼" | 3/4" | 117.0 | - | - |
| | 1¼" | 1" | 150.0 | - | - |
| | 1¼" | 1¼" | 170.0 | - | - |

At branch Y
Kv values in l/min

**Vacuum:**

400 mbar absolute

The service life of the valve may be affected if exposed to a greater vacuum or when valves are installed on the pump suction side.

**Pneumatic actuator**

**Control pressure:**

| Control function | Actuator size | Control pressure |
|---|---|---|
| 1 | 1, 1E | 4.5–7 bar |
| | 2, 2E, 2 F, 2EF | 4–7 bar |
| | 3, 3E, 3 F, 3EF | 4.5–7 bar |
| | 4, 4E | 5–7 bar |
| 2 | 1, 1E, 2, 2E, 2 F, 2EF, 3, 3E, 3 F, 3EF | Max. 5 bar |
| | 4, 4E | Max. 4.5 bar |

**Control pressure / operating pressure characteristics:**

**Control function 2 – normally open (NO)**

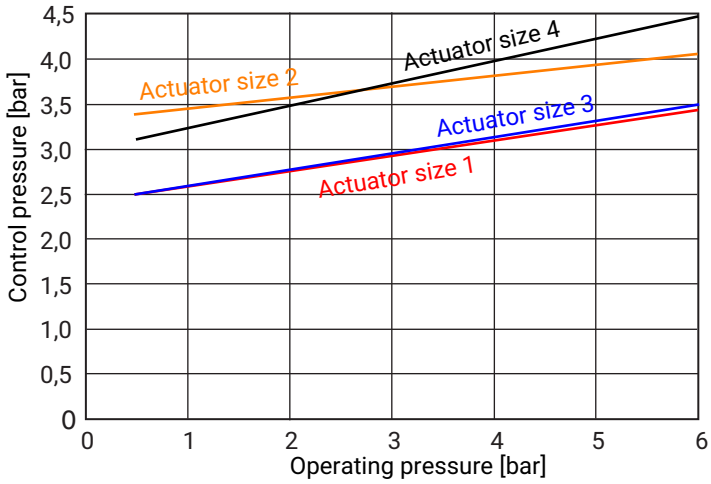


**Control air connection:** G 1/8

**Filling volume:**

| Actuator size | Control function | |
|---|---|---|
| | Normally closed (NC) | Normally open (NO) |
| **1, 1E** | 18.0 | 15.0 |
| **2, 2E, 2 F, 2EF** | 29.0 | 42.5 |
| **3, 3E, 3 F, 3EF** | 63.0 | 95.0 |
| **4, 4E** | 146.0 | 794.0 |

Filling volume in cm³

## Product conformities

| | |
|---|---|
| **Machinery Directive:** | 2006/42/EC |
| **Food:** | FDA |
| **EAC:** | The product is certified according to EAC. |
| **Pressure Equipment Directive:** | Categorisation in accordance with 2014/68/EU Article 4 and Annex II<br>Max. category **GIP** (sound engineering practice) |

## Mechanical data

| | |
|---|---|
| **Flow direction:** | Optional |

# Dimensions C60 PFA

## 2/2-way valves (code D)

### Flare connection (code 73, 75, 77)

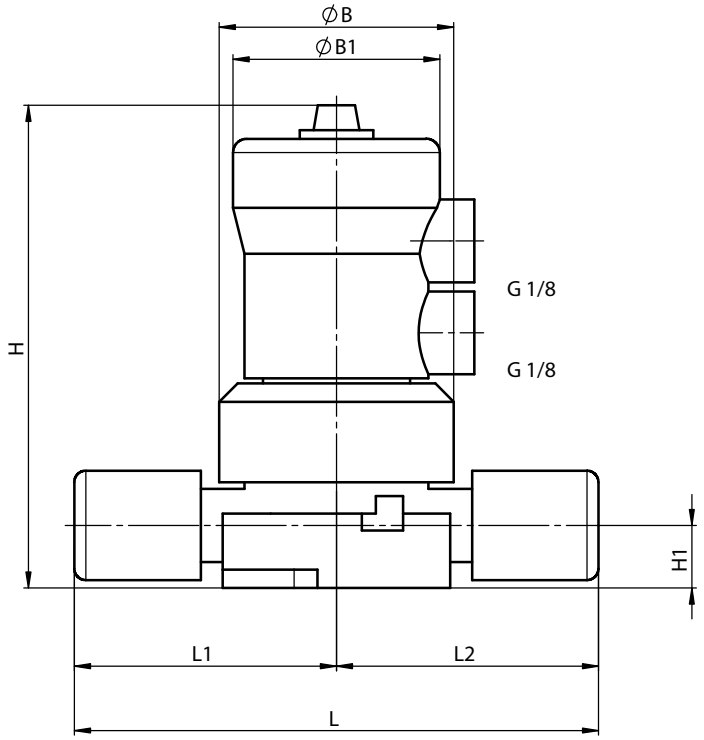


| Actuator size [1] | Connection size | SpaceSaver position [2] | ØB | ØB1 | H | H1 | L | L1 | L2 |
|---|---|---|---|---|---|---|---|---|---|
| 1, 1E | 1/4” | - | 51.4 | 45.0 | 105.0 | 13.6 | 112.8 | 56.4 | 56.4 |
| 1, 1E | 1/4” | Z | 51.4 | 45.0 | 105.0 | 13.6 | 120.1 | 56.4 | 63.7 |
| 1, 1E | 3/8” | - | 51.4 | 45.0 | 105.0 | 13.6 | 114.0 | 57.0 | 57.0 |
| 1, 1E | 3/8” | Z | 51.4 | 45.0 | 105.0 | 13.6 | 119.4 | 57.0 | 62.4 |
| 2, 2E | 1/2” | K | 64.0 | 64.7 | 126.5 | 19.0 | 133.4 | 65.9 | 67.5 |
| 2, 2E | 1/2” | - | 64.0 | 64.7 | 120.5 | 16.0 | 131.8 | 65.9 | 65.9 |
| 2, 2E | 1/2” | S | 64.0 | 64.7 | 120.5 | 16.0 | 142.0 | 71.0 | 71.0 |
| 2, 2E | 1/2” | Z | 64.0 | 64.7 | 120.5 | 16.0 | 136.9 | 65.9 | 71.0 |
| 2, 2E | 3/4” | K | 64.0 | 64.7 | 126.5 | 19.0 | 134.4 | 66.9 | 67.5 |
| 2, 2E | 3/4” | - | 64.0 | 64.7 | 126.5 | 19.0 | 133.8 | 66.9 | 66.9 |
| 2, 2E | 3/4” | S | 64.0 | 64.7 | 126.5 | 19.0 | 156.8 | 78.4 | 78.4 |
| 2, 2E | 3/4” | Z | 64.0 | 64.7 | 126.5 | 19.0 | 145.3 | 66.9 | 78.4 |
| 3, 3E | 3/4” | - | 80.0 | 86.8 | 166.5 | 25.0 | 165.8 | 82.9 | 82.9 |
| 3, 3E | 3/4” | K | 80.0 | 86.0 | 166.5 | 25.0 | 165.9 | 82.9 | 83.0 |
| 3, 3E | 1” | K | 80.0 | 86.8 | 166.5 | 25.0 | 172.5 | 89.5 | 83.0 |
| 3, 3E | 1” | - | 80.0 | 86.8 | 166.5 | 25.0 | 179.0 | 89.5 | 89.5 |
| 3, 3E | 1” | S | 80.0 | 86.8 | 166.5 | 25.0 | 188.9 | 89.5 | 99.4 |
| 3, 3E | 1” | Z | 80.0 | 86.8 | 166.5 | 25.0 | 188.9 | 89.5 | 99.4 |
| 3, 3E | 1¼” | - | 80.0 | 86.8 | 166.5 | 25.0 | 238.4 | 119.2 | 119.2 |
| 2 F, 2EF | 3/4” | - | 64.0 | 64.7 | 126.5 | 19.0 | 133.8 | 66.9 | 66.9 |
| 2 F, 2EF | 3/4” | S | 64.0 | 64.7 | 126.5 | 19.0 | 156.8 | 78.4 | 78.4 |
| 2 F, 2EF | 3/4” | Z | 64.0 | 64.7 | 126.5 | 19.0 | 145.3 | 66.9 | 78.4 |

| Actuator size [1] | Connection size | SpaceSaver position [2] | ØB | ØB1 | H | H1 | L | L1 | L2 |
|---|---|---|---|---|---|---|---|---|---|
| **2 F, 2EF** | **1”** | **-** | 64.0 | 64.7 | 126.5 | 19.0 | 160.0 | 74.0 | 74.0 |
| **3 F, 3EF** | **1”** | **-** | 80.0 | 86.8 | 166.5 | 25.0 | 179.0 | 89.5 | 89.5 |
| **3 F, 3EF** | **1”** | **S** | 80.0 | 86.8 | 166.5 | 25.0 | 198.8 | 99.4 | 99.4 |
| **3 F, 3EF** | **1”** | **Z** | 80.0 | 86.8 | 166.5 | 25.0 | 188.9 | 89.5 | 99.4 |
| **3 F, 3EF** | **1¼”** | **-** | 80.0 | 86.8 | 166.5 | 25.0 | 197.4 | 119.2 | 119.2 |

Dimensions in mm

1) **Actuator version**
   Code 1: Actuator size 1
   Code 1E: Actuator size 1, with ECTFE union nut
   Code 2: Actuator size 2
   Code 2 F: Actuator size 2 High Flow
   Code 2E: Actuator size 2, with ECTFE union nut
   Code 2EF: Actuator size 2 High Flow, with ECTFE union nut
   Code 3: Actuator size 3
   Code 3 F: Actuator size 3 High Flow
   Code 3E: Actuator size 3, with ECTFE union nut
   Code 3EF: Actuator size 3 High Flow, with ECTFE union nut

2) **SpaceSaver position**
   Code K: Flare connection in position X, butt weld spigot in position Z
   Code S: SpaceSaver for X+ Z position
   Code Z: SpaceSaver for Z position

## *Butt weld spigot (code 30)*

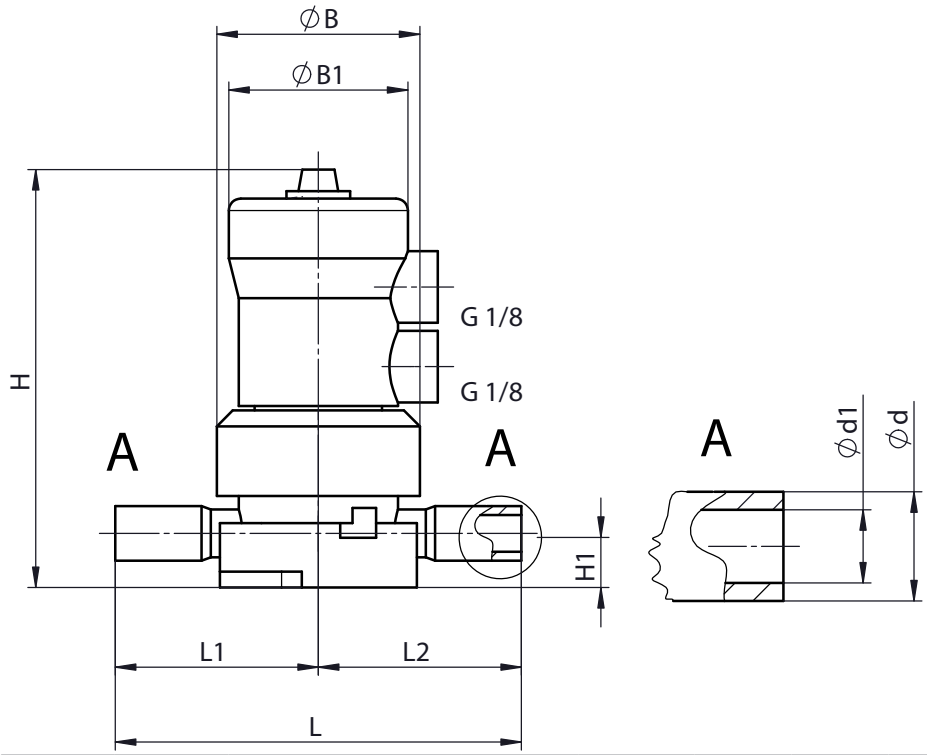


| Actuator size [1] | Connec-tion size | SpaceSaver position [2] | ØB | ØB1 | H | H1 | L | L1 | L2 | Spigot (A) | |
|---|---|---|---|---|---|---|---|---|---|---|---|
| | | | | | | | | | | ød | ød1 |
| **1, 1E** | **1/4”** | - | 51.4 | 45.0 | 105.0 | 13.6 | 100.5 | 50.3 | 50.3 | 13.7 | 9.2 |
| **2, 2E** | **1/2”** | - | 64.0 | 64.7 | 126.5 | 19.0 | 135.0 | 67.5 | 67.5 | 21.3 | 15.8 |
| **2, 2E** | **3/4”** | - | 64.0 | 64.7 | 126.5 | 19.0 | 135.0 | 67.5 | 67.5 | 26.7 | 20.3 |
| **3, 3E** | **3/4”** | - | 80.0 | 86.8 | 166.0 | 25.0 | 165.5 | 82.8 | 82.8 | 26.7 | 20.3 |
| **3, 3E** | **1”** | - | 80.0 | 86.8 | 166.0 | 25.0 | 163.5 | 81.8 | 81.8 | 33.4 | 26.6 |
| **4, 4E** | **1½”** | - | 132.3 | 153.0 | 349.6 | 40.0 | 194.0 | 97.0 | 97.0 | 48.3 | 40.9 |
| **4, 4E** | **2”** | - | 132.3 | 153.0 | 349.6 | 40.0 | 224.0 | 112.0 | 112.0 | 60.3 | 52.3 |
| High Flow | | | | | | | | | | | |
| **2 F, 2EF** | **1/2”** | - | 64.0 | 64.7 | 126.5 | 19.0 | 136.5 | 68.3 | 68.3 | 21.3 | 15.8 |
| **2 F, 2EF** | **3/4”** | - | 64.0 | 64.7 | 126.5 | 19.0 | 135.0 | 67.5 | 67.5 | 26.7 | 20.3 |
| **2 F, 2EF** | **1”** | - | 64.0 | 64.7 | 126.5 | 19.0 | 147.5 | 73.8 | 73.8 | 33.4 | 26.6 |
| **3F, 3EF** | **1”** | - | 80.0 | 86.8 | 166.0 | 25.0 | 166.0 | 83.0 | 83.0 | 33.4 | 26.6 |

Dimensions in mm

1) **Actuator version**
   Code 1: Actuator size 1
   Code 1E: Actuator size 1, with ECTFE union nut
   Code 2: Actuator size 2
   Code 2 F: Actuator size 2 High Flow
   Code 2E: Actuator size 2, with ECTFE union nut
   Code 2EF: Actuator size 2 High Flow, with ECTFE union nut
   Code 3: Actuator size 3
   Code 3 F: Actuator size 3 High Flow
   Code 3E: Actuator size 3, with ECTFE union nut
   Code 3EF: Actuator size 3 High Flow, with ECTFE union nut
   Code 4: Actuator size 4

2) **SpaceSaver position**
   Code K: Flare connection in position X, butt weld spigot in position Z
   Code S: SpaceSaver for X+ Z position
   Code Z: SpaceSaver for Z position

## *PrimeLock® connection (code PL)*

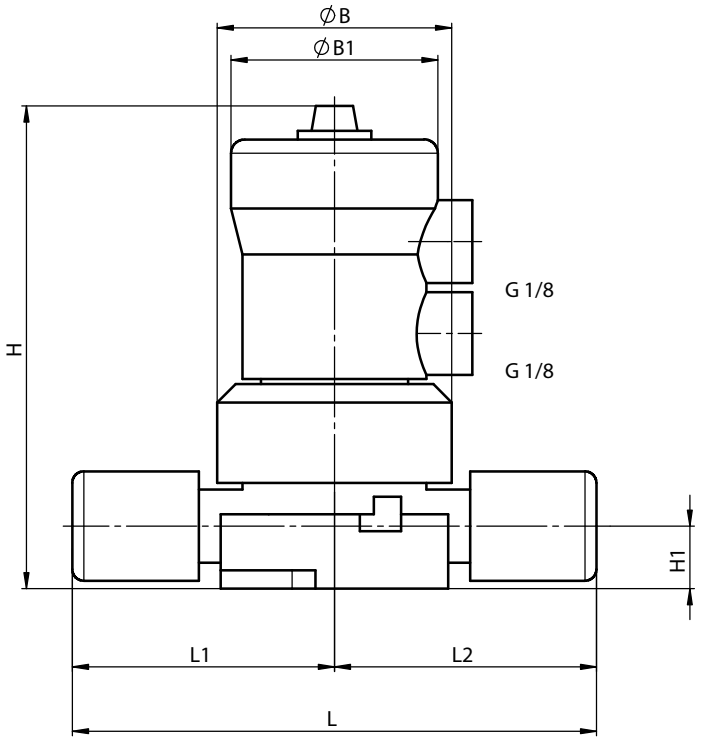


| Actuator size [1] | Connection size | SpaceSaver position [2] | ØB | ØB1 | H | H1 | L | L1 | L2 |
|---|---|---|---|---|---|---|---|---|---|
| **1, 1E** | **1/4”** | **-** | 51.4 | 45.0 | 107.0 | 15.0 | 113.0 | 57.0 | 57.0 |
| **1, 1E** | **3/8”** | **-** | 51.4 | 45.0 | 107.0 | 15.0 | 117.0 | 59.0 | 59.0 |
| **2, 2E** | **1/2”** | **-** | 64.0 | 64.7 | 126.5 | 16.0 | 141.0 | 71.0 | 71.0 |
| **2 F, 2EF** | **3/4”** | **-** | 64.0 | 64.7 | 126.5 | 19.0 | 156.0 | 79.0 | 79.0 |
| **2 F, 2EF** | **1”** | **-** | 64.0 | 64.7 | 126.5 | 19.0 | 169.0 | 85.0 | 85.0 |
| **3 F, 3EF** | **1”** | **-** | 80.0 | 86.8 | 185.0 | 25.0 | 185.0 | 94.0 | 94.0 |
| **3 F, 3EF** | **1¼”** | **-** | 80.0 | 86.8 | 209.0 | 25.0 | 209.0 | 105.0 | 105.0 |

Dimensions in mm

1) **Actuator version**
   Code 1: Actuator size 1
   Code 1E: Actuator size 1, with ECTFE union nut
   Code 2: Actuator size 2
   Code 2 F: Actuator size 2 High Flow
   Code 2E: Actuator size 2, with ECTFE union nut
   Code 2EF: Actuator size 2 High Flow, with ECTFE union nut
   Code 3: Actuator size 3
   Code 3 F: Actuator size 3 High Flow
   Code 3E: Actuator size 3, with ECTFE union nut
   Code 3EF: Actuator size 3 High Flow, with ECTFE union nut

2) **SpaceSaver position**
   Code K: Flare connection in position X, butt weld spigot in position Z
   Code S: SpaceSaver for X+ Z position
   Code Z: SpaceSaver for Z position

## *Tube spigot (code T3)*

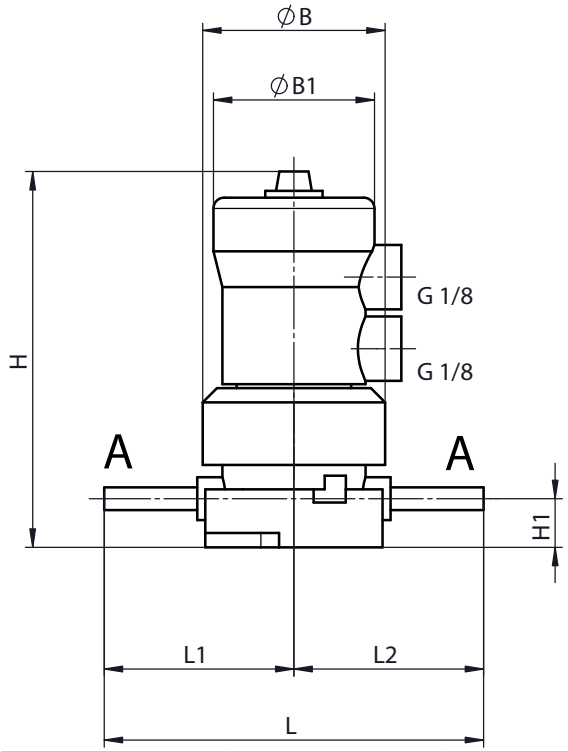


| Actuator size [1] | Connection size | SpaceSaver position [2] | ØB | ØB1 | H | H1 | L | L1 | L2 | Spigot (A) | |
|---|---|---|---|---|---|---|---|---|---|---|---|
| | | | | | | | | | | ød | ød1 |
| **1, 1E** | **3/8”** | - | 51.4 | 45.0 | 107.0 | 13.6 | 106.0 | 53.0 | 53.0 | 9.5 | 6.6 |
| **2, 2E** | **1/2”** | - | 64.0 | 64.7 | 120.5 | 16.0 | 122.0 | 61.0 | 61.0 | 12.7 | 9.7 |
| **2, 2E** | **3/4”** | - | 64.0 | 64.7 | 126.5 | 19.0 | 135.0 | 67.5 | 67.5 | 19.05 | 15.9 |
| **3, 3E** | **1”** | - | 80.0 | 86.0 | 166.5 | 25.0 | 165.8 | 82.5 | 82.5 | 25.4 | 22.2 |
| **2 F, 2EF** | **3/4”** | - | 64.0 | 64.7 | 126.5 | 19.0 | 135.0 | 67.5 | 67.5 | 19.05 | 15.9 |
| **2 F, 2EF** | **1”** | - | 64.0 | 64.7 | 126.5 | 19.0 | 148.0 | 74.0 | 74.0 | 25.4 | 22.2 |
| **3 F, 3EF** | **1”** | - | 80.0 | 86.8 | 166.5 | 25.0 | 165.0 | 82.5 | 82.5 | 25.4 | 22.2 |
| **3 F, 3EF** | **1¼”** | - | 80.0 | 86.8 | 166.5 | 25.0 | 176.0 | 88.0 | 88.0 | 31.75 | 28.2 |

Dimensions in mm

1) **Actuator version**
   Code 1: Actuator size 1
   Code 1E: Actuator size 1, with ECTFE union nut
   Code 2: Actuator size 2
   Code 2 F: Actuator size 2 High Flow
   Code 2E: Actuator size 2, with ECTFE union nut
   Code 2EF: Actuator size 2 High Flow, with ECTFE union nut
   Code 3: Actuator size 3
   Code 3 F: Actuator size 3 High Flow
   Code 3E: Actuator size 3, with ECTFE union nut
   Code 3EF: Actuator size 3 High Flow, with ECTFE union nut

2) **SpaceSaver position**
   Code K: Flare connection in position X, butt weld spigot in position Z
   Code S: SpaceSaver for X+ Z position
   Code Z: SpaceSaver for Z position

## *Nexus Connect® (code NX)*

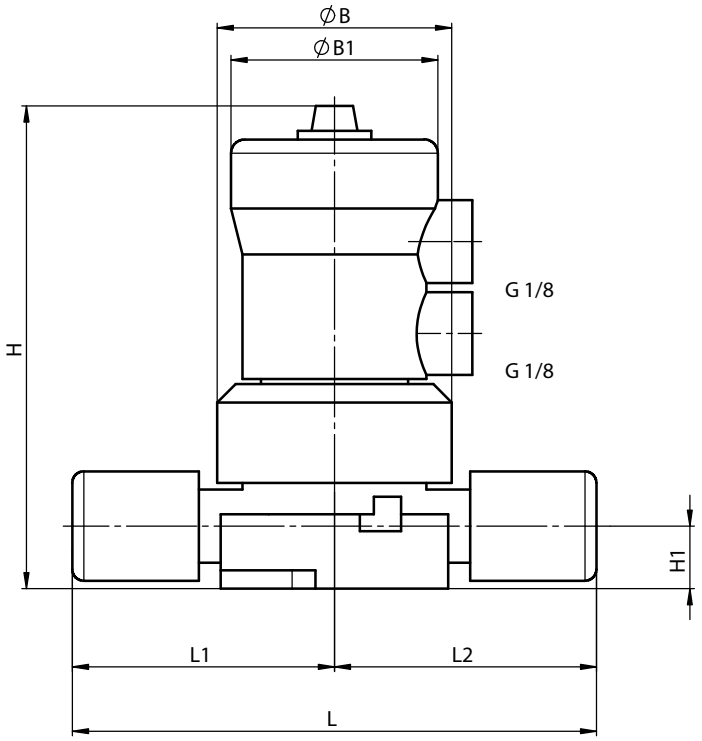


**Nexus Connect®, welded**

| Actuator size [1] | Connection size | SpaceSaver position [2] | ØB | ØB1 | H | H1 | L | L1 | L2 |
|---|---|---|---|---|---|---|---|---|---|
| **1** | **1/4”** | - | 51.4 | 45.0 | 107.0 | 13.6 | 140.5 | 70.3 | 70.3 |
| **1** | **3/8”** | - | 51.4 | 45.0 | 107.0 | 13.6 | 147.7 | 73.9 | 73.9 |
| **2** | **1/2”** | - | 64.0 | 64.7 | 126.5 | 19.0 | 153.0 | 76.5 | 76.5 |
| **2** | **3/4”** | - | 64.0 | 64.7 | 126.5 | 19.0 | 179.1 | 89.6 | 89.6 |
| **2F** | **3/4”** | - | 64.0 | 64.7 | 126.5 | 19.0 | 178.4 | 89.2 | 89.2 |
| **3, 3E** | **1”** | - | 80.0 | 86.8 | 166.5 | 25.0 | 205.0 | 102.5 | 102.5 |
| **3, 3E, 3F, 3EF** | **1 1/4"** | - | 80.0 | 86.8 | 166.5 | 25.0 | 306.0 | 153.0 | 153.0 |
| **3F** | **1”** | - | 80.0 | 86.8 | 166.5 | 25.0 | 222.4 | 111.2 | 111.2 |
| **4, 4E** | **1 1/2"** | - | 132.3 | 153.0 | 349.6 | 40.0 | 378.7 | 189.4 | 189.4 |

Dimensions in mm

1) **Actuator version**
   Code 1: Actuator size 1
   Code 2: Actuator size 2
   Code 2 F: Actuator size 2 High Flow
   Code 3: Actuator size 3
   Code 3E: Actuator size 3, with ECTFE union nut
   Code 3EF: Actuator size 3 High Flow, with ECTFE union nut
   Code 3 F: Actuator size 3 High Flow
   Code 4: Actuator size 4
   Code 4E: Actuator size 4, with ECTFE-union nut, maximum operating temperature 60 °C

2) **SpaceSaver position**
   Code S: SpaceSaver for X+ Z position

### Nexus Connect®, SpaceSaver

| Actuator size [1] | Connection size | SpaceSaver position [2] | ØB | ØB1 | H | H1 | L | L1 | L2 |
|---|---|---|---|---|---|---|---|---|---|
| **1** | **3/8”** | **S** | 51.4 | 45.0 | 105.0 | 13.6 | 112.4 | 56.2 | 56.2 |
| **2** | **1/2”** | **S** | 64.0 | 64.7 | 120.5 | 16.0 | 131.6 | 65.8 | 65.8 |
| **2F** | **3/4”** | **S** | 64.0 | 64.7 | 126.5 | 19.0 | 145.1 | 72.6 | 72.6 |
| **2F** | **1“** | **S** | 64.0 | 64.7 | 126.5 | 19.0 | 162.0 | 81.0 | 81.0 |
| **3F** | **1”** | **S** | 80.0 | 86.8 | 166.5 | 25.0 | 176.3 | 88.2 | 88.2 |

Dimensions in mm

1) **Actuator version**
   Code 1: Actuator size 1
   Code 2: Actuator size 2
   Code 2 F: Actuator size 2 High Flow
   Code 3: Actuator size 3
   Code 3 F: Actuator size 3 High Flow

2) **SpaceSaver position**
   Code S: SpaceSaver for X+ Z position

### Nexus Connect®, moulded on (Standard 1, 2, 3, High Flow design 3F)

| Actuator size [1] | Connection size | SpaceSaver position [2] | ØB | ØB1 | H | H1 | L | L1 | L2 |
|---|---|---|---|---|---|---|---|---|---|
| **1, 1E** | **1/4”** | **-** | 51.4 | 45.0 | 107.0 | 13.6 | 98.8 | 49.4 | 49.4 |
| **1, 1E** | **3/8”** | **-** | 51.4 | 45.0 | 107.0 | 13.6 | 108.4 | 54.2 | 54.2 |
| **2, 2E** | **1/2”** | **-** | 64.0 | 64.7 | 120.5 | 16.0 | 134.9 | 67.5 | 67.5 |
| **2, 2E** | **3/4”** | **-** | 64.0 | 64.7 | 126.5 | 16.0 | 142.9 | 71.5 | 71.5 |
| **3F, 3EF** | **3/4”** | **-** | 80.0 | 86.8 | 166.5 | 25.0 | 161.6 | 80.8 | 80.8 |
| **3F, 3EF** | **1“** | **-** | 80.0 | 86.8 | 166.5 | 25.0 | 171.4 | 85.7 | 85.7 |

Dimensions in mm

1) **Actuator version**
   Code 1: Actuator size 1
   Code 1E: Actuator size 1, with ECTFE union nut
   Code 2: Actuator size 2
   Code 2E: Actuator size 2, with ECTFE union nut
   Code 3 F: Actuator size 3 High Flow
   Code 3EF: Actuator size 3 High Flow, with ECTFE union nut

2) **SpaceSaver position**
   Code S: SpaceSaver for X+ Z position

# T body (code T)

## Flare connection (code 73, 75, 77)

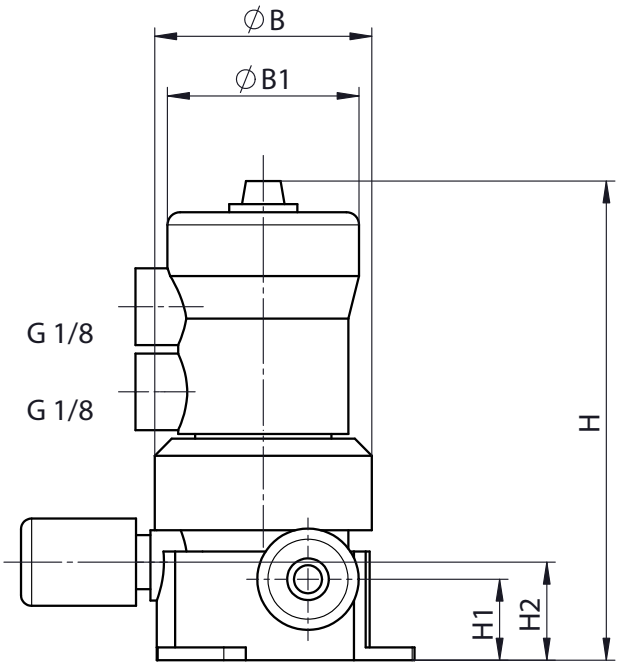


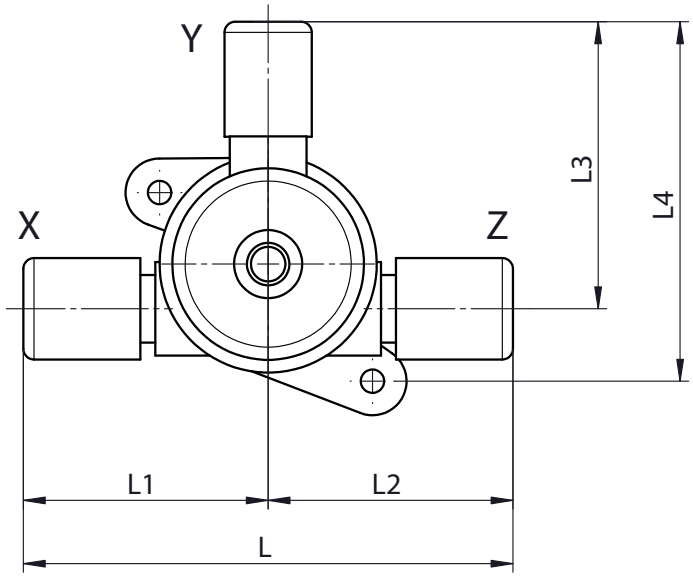


| Actuator size [1] | Connection size | | SpaceSaver position [2] | | ØB | ØB1 | H | H1 | H2 | L | L1 | L2 | L3 | L4 |
|---|---|---|---|---|---|---|---|---|---|---|---|---|---|---|
| | Pos. (X, Z) | Pos. (Y) | Pos. (X, Z) | Pos. (Y) | | | | | | | | | | |
| **1, 1E** | **3/8”** | **1/4”** | **-** | **-** | 51.4 | 45.0 | 115.0 | 19.0 | 23.0 | 115.0 | 57.5 | 57.5 | 67.4 | 84.4 |
| **1, 1E** | **3/8”** | **3/8”** | **-** | **-** | 51.4 | 45.0 | 115.0 | 19.0 | 23.0 | 115.0 | 57.5 | 57.5 | 68.0 | 85.0 |
| **1, 1E** | **1/2”** | **3/8”** | **-** | **-** | 51.4 | 45.0 | 115.0 | 19.0 | 23.0 | 120.8 | 60.4 | 60.4 | 68.0 | 85.0 |
| **1, 1E** | **1/2”** | **3/8”** | **Z** | **-** | 51.4 | 45.0 | 115.0 | 19.0 | 23.0 | 131.9 | 60.4 | 71.5 | 68.0 | 85.0 |
| **1, 1E** | **3/4”** | **3/8”** | **-** | **-** | 51.4 | 45.0 | 115.0 | 19.0 | 23.0 | 125.8 | 62.9 | 62.9 | 68.0 | 85.0 |
| **1, 1E** | **3/4”** | **3/8”** | **Z** | **-** | 51.4 | 45.0 | 115.0 | 19.0 | 23.0 | 135.3 | 62.9 | 72.4 | 68.0 | 85.0 |
| **2, 2E** | **1/2”** | **1/2”** | **-** | **-** | 64.0 | 64.7 | 126.5 | 19.0 | 19.0 | 131.8 | 65.9 | 65.9 | 80.4 | 98.4 |
| **2, 2E** | **1/2”** | **1/2”** | **Z** | **-** | 64.0 | 64.7 | 126.5 | 19.0 | 19.0 | 136.0 | 65.9 | 70.1 | 80.4 | 98.4 |
| **2, 2E** | **1/2”** | **1/2”** | **-** | **Y** | 64.0 | 64.7 | 126.5 | 19.0 | 19.0 | 131.8 | 65.9 | 65.9 | 85.5 | 103.5 |
| **2, 2E** | **3/4”** | **1/2”** | **-** | **-** | 64.0 | 64.7 | 126.5 | 19.0 | 19.0 | 133.8 | 66.9 | 66.9 | 80.4 | 98.4 |
| **2, 2E** | **3/4”** | **1/2”** | **S** | **-** | 64.0 | 64.7 | 126.5 | 19.0 | 19.0 | 156.8 | 78.4 | 78.4 | 80.4 | 98.4 |
| **2, 2E** | **3/4”** | **1/2”** | **X** | **-** | 64.0 | 64.7 | 126.5 | 19.0 | 19.0 | 145.3 | 66.9 | 78.4 | 80.4 | 98.4 |
| **2, 2E** | **3/4”** | **1/2”** | **Z** | **-** | 64.0 | 64.7 | 126.5 | 19.0 | 19.0 | 145.3 | 66.9 | 78.4 | 80.4 | 98.4 |
| **2, 2E** | **3/4”** | **1/2”** | **-** | **Y** | 64.0 | 64.7 | 126.5 | 19.0 | 19.0 | 133.8 | 66.9 | 66.9 | 85.5 | 103.5 |
| **2, 2E** | **3/4”** | **3/4”** | **-** | **-** | 64.0 | 64.7 | 126.5 | 19.0 | 19.0 | 133.8 | 66.9 | 66.9 | 81.4 | 99.4 |
| **2, 2E** | **3/4”** | **3/4”** | **X** | **-** | 64.0 | 64.7 | 126.5 | 19.0 | 19.0 | 145.3 | 78.4 | 66.9 | 81.4 | 99.4 |
| **2, 2E** | **3/4”** | **3/4”** | **Z** | **-** | 64.0 | 64.7 | 126.5 | 19.0 | 19.0 | 145.3 | 66.9 | 78.4 | 81.4 | 99.4 |
| **2, 2E** | **3/4”** | **3/4”** | **-** | **Y** | 64.0 | 64.7 | 126.5 | 19.0 | 19.0 | 133.8 | 66.9 | 66.9 | 92.4 | 110.4 |
| **3, 3E** | **1”** | **1”** | **-** | **-** | 80.0 | 86.8 | 170.0 | 25.0 | 25.0 | 168.0 | 84.0 | 84.0 | 110.5 | 133.0 |
| **3, 3E** | **1”** | **1”** | **X** | **-** | 80.0 | 86.8 | 170.0 | 25.0 | 25.0 | 177.9 | 93.9 | 84.0 | 110.5 | 133.0 |
| **3, 3E** | **1¼”** | **1/2”** | **-** | **-** | 80.0 | 86.8 | 170.0 | 25.0 | 25.0 | 238.4 | 119.2 | 119.2 | 99.9 | 122.4 |
| **3, 3E** | **1¼”** | **1”** | **-** | **-** | 80.0 | 86.8 | 170.0 | 25.0 | 25.0 | 238.4 | 119.2 | 119.2 | 110.5 | 133.0 |

| Actuator size [1] | Connection size | | SpaceSaver position [2] | | ØB | ØB1 | H | H1 | H2 | L | L1 | L2 | L3 | L4 |
|---|---|---|---|---|---|---|---|---|---|---|---|---|---|---|
| | Pos. (X, Z) | Pos. (Y) | Pos. (X, Z) | Pos. (Y) | | | | | | | | | | |
| **3, 3E** | **1¼"** | **1¼"** | **-** | **-** | 80.0 | 86.8 | 170.0 | 25.0 | 25.0 | 238.4 | 119.2 | 119.2 | 143.2 | 165.7 |

Dimensions in mm

1) **Actuator version**
   Code 1: Actuator size 1
   Code 1E: Actuator size 1, with ECTFE union nut
   Code 2: Actuator size 2
   Code 2 F: Actuator size 2 High Flow
   Code 2E: Actuator size 2, with ECTFE union nut
   Code 2EF: Actuator size 2 High Flow, with ECTFE union nut
   Code 3: Actuator size 3
   Code 3 F: Actuator size 3 High Flow
   Code 3E: Actuator size 3, with ECTFE union nut
   Code 3EF: Actuator size 3 High Flow, with ECTFE union nut

2) **SpaceSaver position**
   Code X: SpaceSaver for X position
   Code Y: SpaceSaver for Y position
   Code Z: SpaceSaver for Z position

## *Butt weld spigot (code 30)*

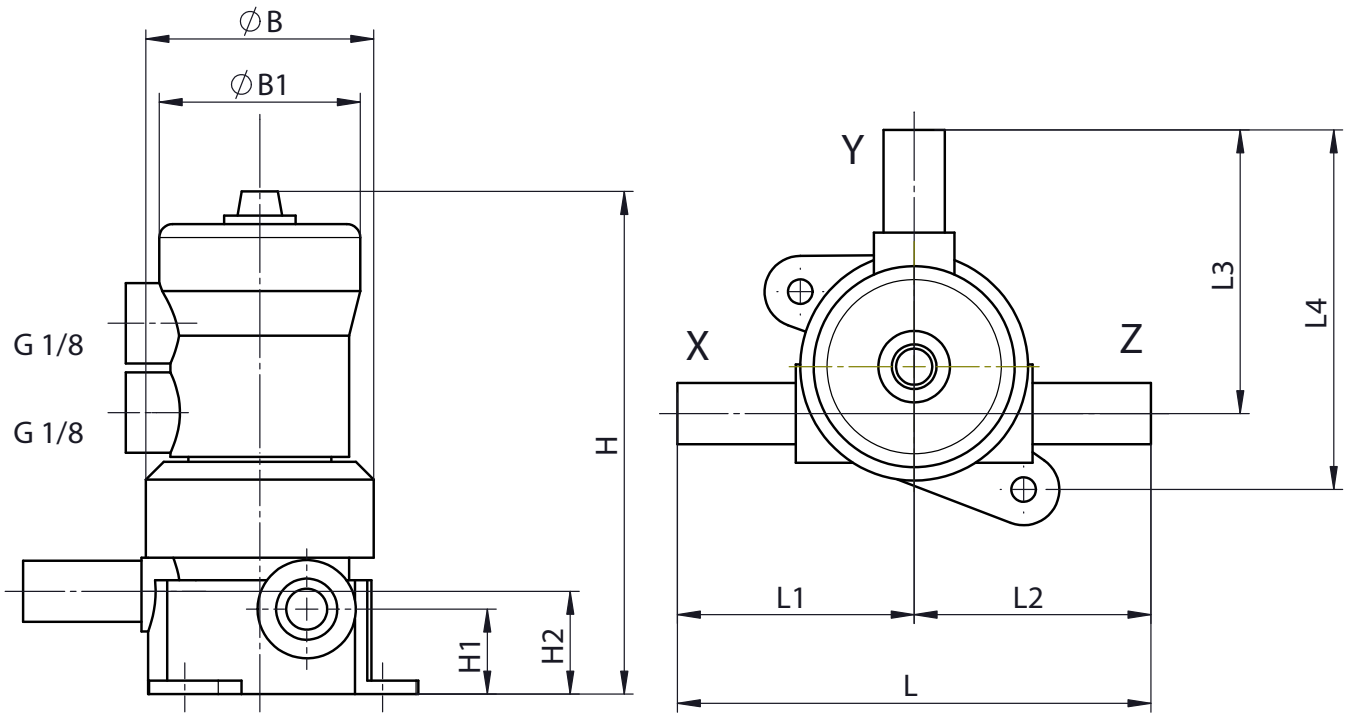


Dimensions: Spigot (A) (see “Butt weld spigot (code 30)“, page 24)

| Actuator size [1] | Connection size | | SpaceSaver position [2] | Connection [3] | ØB | ØB1 | H | H1 | H2 | L | L1 | L2 | L3 | L4 |
|---|---|---|---|---|---|---|---|---|---|---|---|---|---|---|
| | Pos. (X, Z) | Pos. (Y) | Pos. (Y) | Pos. (Y) | | | | | | | | | | |
| **1, 1E** | **1/4”** | **1/4”** | **-** | **30** | 51.4 | 45.0 | 115.0 | 19.0 | 23.0 | 106.0 | 53.0 | 53.0 | 63.5 | 80.5 |
| **1, 1E** | **1/2”** | **1/4”** | **-** | **30** | 51.4 | 45.0 | 115.0 | 19.0 | 23.0 | 106.0 | 53.0 | 53.0 | 63.5 | 80.5 |
| **2, 2E** | **1/2”** | **1/2”** | **-** | **30** | 64.0 | 64.7 | 126.5 | 19.0 | 19.0 | 122.0 | 61.0 | 61.0 | 75.5 | 93.5 |
| **2, 2E** | **3/4”** | **1/4”** | **-** | **30** | 64.0 | 64.7 | 135.9 | 25.0 | 28.5 | 140.0 | 70.0 | 70.0 | 76.5 | 96.0 |
| **3, 3E** | **1”** | **1/2”** | **-** | **30** | 80.0 | 86.8 | 170.0 | 25.0 | 25.0 | 163.0 | 81.5 | 81.5 | 102.0 | 124.5 |
| **3, 3E** | **1”** | **1/2”** | **-** | **73, 75, 77** | 80.0 | 86.8 | 170.0 | 25.0 | 25.0 | 163.0 | 81.5 | 81.5 | 99.9 | 122.4 |
| **3, 3E** | **1”** | **3/4”** | **-** | **30** | 80.0 | 86.8 | 170.0 | 25.0 | 25.0 | 163.0 | 81.5 | 81.5 | 102.0 | 124.5 |
| **3, 3E** | **1”** | **1”** | **-** | **30** | 80.0 | 86.8 | 170.0 | 25.0 | 25.0 | 163.0 | 81.5 | 81.5 | 103.5 | 126.0 |

| Actuator size [1] | Connection size | | SpaceSaver position [2] | Connection [3] | ØB | ØB1 | H | H1 | H2 | L | L1 | L2 | L3 | L4 |
|---|---|---|---|---|---|---|---|---|---|---|---|---|---|---|
| | Pos. (X, Z) | Pos. (Y) | Pos. (Y) | Pos. (Y) | | | | | | | | | | |
| **3, 3E** | **1”** | **1”** | **-** | **73, 75, 77** | 80.0 | 86.8 | 170.0 | 25.0 | 25.0 | 163.0 | 81.5 | 81.5 | 110.5 | 133.0 |

Dimensions in mm

1) **Actuator version**
   Code 1: Actuator size 1
   Code 1E: Actuator size 1, with ECTFE union nut
   Code 2: Actuator size 2
   Code 2 F: Actuator size 2 High Flow
   Code 2E: Actuator size 2, with ECTFE union nut
   Code 2EF: Actuator size 2 High Flow, with ECTFE union nut
   Code 3: Actuator size 3
   Code 3 F: Actuator size 3 High Flow
   Code 3E: Actuator size 3, with ECTFE union nut
   Code 3EF: Actuator size 3 High Flow, with ECTFE union nut

2) **SpaceSaver position**
   Code X: SpaceSaver for X position
   Code Y: SpaceSaver for Y position
   Code Z: SpaceSaver for Z position

3) **Connection type**
   Code 30: Spigot – inch, for welding or solvent cementing, depending on the body material
   Code 73: Flare connection with CPFA union nut
   Code 75: Flare connection with PVDF union nut
   Code 77: Flare connection with PFA union nut

## Mounting dimensions

2/2-way valve (code D)

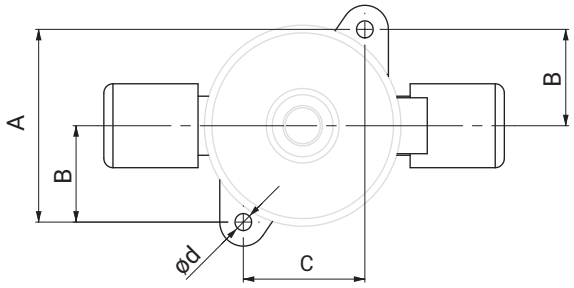


T valve (code T)

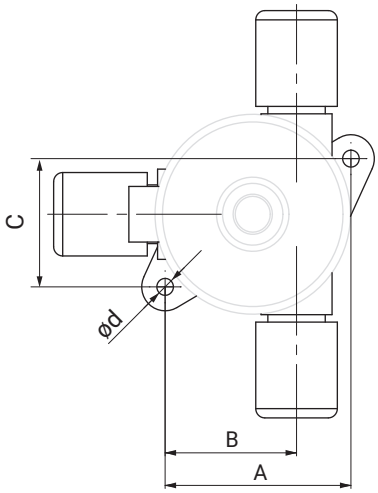


**2/2-way valves (code D)**

| Actuator size | ød | A | B | C |
|---|---|---|---|---|
| **1, 1E** | 5.5 | 50.5 | 25.25 | 33.5 |
| **2, 2E, 2 F, 2EF** | 5.5 | 61.5 | 31.0 | 40.0 |
| **3, 3E, 3 F, 3EF** | 6.5 | 78.0 | 39.0 | 56.0 |
| **4, 4E** | 9.0 | 124.0 | 62.0 | 94.0 |

Dimensions in mm

**T valve (code T)**

| Actuator size | ød | A | B | C |
|---|---|---|---|---|
| **1, 1E** | 5.5 | 44.3 | 27.3 | 50.0 |
| **2, 2E, 2 F, 2EF** | 5.5 | 61.5 | 43.5 | 41.5 |
| **3, 3E, 3 F, 3EF** | 6.5 | 79.5 | 57.0 | 52.5 |

Dimensions in mm

## Mounting holes, round and slotted hole

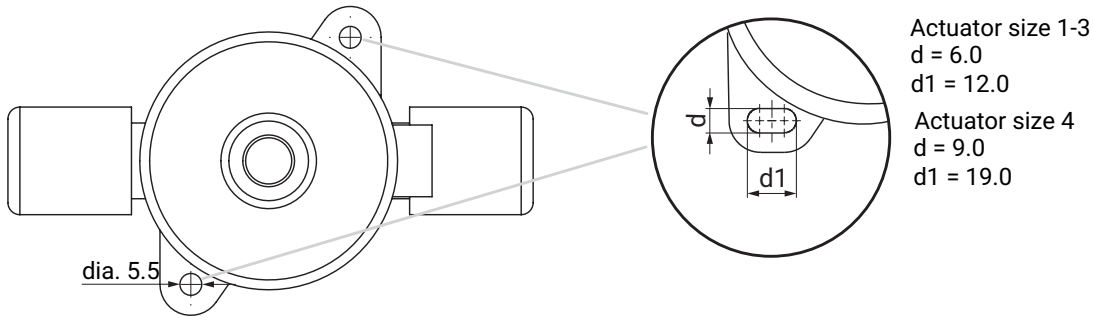


Dimensions in mm

Dear customers,
In order to simplify installation, we are switching over the mounting holes to slotted holes for all valve sizes.
Due to the gradual changeover in manufacturing, you may therefore receive valve bodies with new slotted holes and also with the old, round boreholes during this phase.
We ask for your understanding in this matter.

# GEMÜ C60 CleanStar PFA 3/5-way

## Pneumatically operated 3/5-way diaphragm valve with PFA valve body

## Features

- High flow rate
- Minimal contamination
- Minimal deadleg
- Optional flow direction
- Can be used as a media mixing configuration or manifold valve
- Both actuators can be independently controlled
- Combination of manual and pneumatic actuator selectable

## Description

The ultra pure 3/5-way diaphragm valve GEMÜ C60 CleanStar® with a V valve body produced from PFA has two valve seats. All media wetted parts are produced from PFA or PTFE (diaphragms). The external actuator parts are produced from PVDF. Solid mounting lugs, as well as a leak detection hole, are integrated as standard. The union nuts are available in PVDF, PFA and C-PFA. This High Purity version of the CleanStar® series complies with the strictest purity standards and boasts high chemical resistance. It can also be used with high media temperatures. As such, it is often used at the supply and distribution level in semiconductor factories, particularly to collect or mix media flows.

## Technical specifications

- **Media temperature :** -10 to 150 °C
- **Ambient temperature:** 0 to 60 °C
- **Operating pressure :** 0 to 6 bar
- **Nominal sizes:** DN 10 to 15
- **Body configurations:** V valve body
- **Connection types:** Flare
- **Connection standards:** DIN
- **Body materials:** PFA
- **Diaphragm materials:** PTFE/EPDM
- **Conformities:** EAC I FDA I TA Luft (German Clean Air Act)

Technical data depends on the respective configuration

# Availability C60 PFA 3/5-way

## Connections

| Actuator size | Flare connection | SpaceSaver position | | | | | Butt weld spigot |
|---|---|---|---|---|---|---|---|
| | Connection size X, Y, Z | Without | X (code X) | Y (code Y) | Z (code Z) | X, Z (code S) | |
| | Code | | | | | | |
| 2 | 8 | X | - | - | - | - | - |
| | 12 | X | - | - | - | - | - |

## Actuator assignments

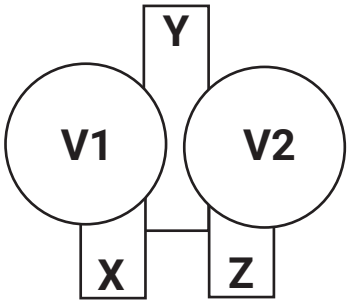


| V1 | | V2 | | Control function (code) |
|---|---|---|---|---|
| Valve 1 (position X - Y) | | Valve 2 (position Z - Y) | | |
| Type | Control function | Type | Control function | |
| C60 | Normally closed (NC) | C60 | Normally closed (NC) | **1** |
| C60 | Normally closed (NC) | C60 | Normally open (NO) | **D** |
| C60 | Normally closed (NC) | C67 | Manually operated | **F** |
| C60 | Normally open (NO) | C60 | Normally open (NO) | **2** |
| C60 | Normally open (NO) | C60 | Normally closed (NC) | **G** |
| C60 | Normally open (NO) | C67 | Manually operated | **K** |
| C67 | Manually operated | C60 | Normally closed (NC) | **A** |
| C67 | Manually operated | C60 | Normally open (NO) | **B** |
| C67 | Manually operated | C67 | Manually operated | **0** |

# Order data C60 PFA 3/5-way

## Order codes

The order data provide an overview of standard configurations.

Please check the availability before ordering. Other configurations available on request.

Provisionally only designs with the same nominal sizes in all positions

| 1 Type | Code |
|---|---|
| C60 - valve 1 (between X - Y) | |
| Diaphragm valve, pneumatically operated,<br>plastic piston actuator,<br>optical position indicator,<br>stroke limiter (for actuator size 1–3 only) | C60 |
| C67 - valve 1 (between X - Y) | |
| Diaphragm valve, manually operated,<br>plastic handwheel,<br>seal adjuster | C67 |

| 2 SpaceSaver position | Code |
|---|---|
| Without | |
| SpaceSaver for X+ Z position | S |
| SpaceSaver for X position | X |
| SpaceSaver for Y position | Y |
| SpaceSaver for Z position | Z |

| 3 Connection size | Code |
|---|---|
| Position Y | |
| 1/2”, international code: 8 | 8 |
| 3/4”, international code: 12 | 12 |

| 4 Housing configuration | Code |
|---|---|
| Multi-port body V-form | V |

| 5 Connection type | Code |
|---|---|
| Tube | |
| Flare connection with CPFA union nut | 73 |
| Flare connection with PVDF union nut | 75 |
| Flare connection with PFA union nut | 77 |

| 6 Valve body material | Code |
|---|---|
| PFA, perfluoroalkoxy | 30 |

| 7 Diaphragm material | Code |
|---|---|
| PTFE/EPDM one-piece | 54 |

| 8 Control function | Code |
|---|---|
| C60 / C60 | |
| Normally closed (NC) | 1 |
| Normally open (NO) | 2 |
| Normally closed,<br>normally open | D |
| Normally open,<br>normally closed | G |

| 8 Control function | Code |
|---|---|
| C60 / C67 | |
| Normally closed,<br>manually operated | F |
| Normally open,<br>manually operated | K |
| C67 / C60 | |
| Manually operated,<br>normally closed | A |
| Manually operated,<br>normally open | B |
| C67 / C67 | |
| Manually operated | 0 |

| 9 Actuator version | Code |
|---|---|
| Standard version | |
| Actuator size 2 | 2 |
| Standard version with ECTFE union nut | |
| Actuator size 2,<br>with ECTFE union nut | 2E |

| 10 Type of design | Code |
|---|---|
| Without | |
| C60, spring, PFA-coated (on request) | 7030 |

| 11 SpaceSaver 2 position | Code |
|---|---|
| Without | |
| SpaceSaver for X+ Z position | S |
| SpaceSaver for X position | X |
| SpaceSaver for Y position | Y |
| SpaceSaver for Z position | Z |

| 12 Connection size 2 | Code |
|---|---|
| Position X and Z | |
| 1/2”, international code-2: 8 | 8 |
| 3/4”, international code-2: 12 | 12 |

| 13 Connection type, spigot 2 | Code |
|---|---|
| Position X and Z | |
| Tube | |
| Flare connection with CPFA union nut | 73 |
| Flare connection with PVDF union nut | 75 |
| Flare connection with PFA union nut | 77 |

| 14 High Purity version | Code |
|---|---|
| High Purity, white | HPW |

## Order example

| Ordering option | Code | Description |
|---|---|---|
| 1 Type | C60 | Diaphragm valve, pneumatically operated,<br>plastic piston actuator,<br>optical position indicator,<br>stroke limiter (for actuator size 1–3 only) |
| 2 SpaceSaver position | Y | SpaceSaver for Y position |
| 3 Connection size | 8 | 1/2”, international code: 8 |
| 4 Housing configuration | V | Multi-port body V-form |
| 5 Connection type | 75 | Flare connection with PVDF union nut |
| 6 Valve body material | 30 | PFA, perfluoroalkoxy |
| 7 Diaphragm material | 54 | PTFE/EPDM one-piece |
| 8 Control function | F | Normally closed,<br>manually operated |
| 9 Actuator version | 2 | Actuator size 2 |
| 10 Type of design | | Without |
| 11 SpaceSaver 2 position | S | SpaceSaver for X+ Z position |
| 12 Connection size 2 | 8 | 1/2”, international code-2: 8 |
| 13 Connection type | 75 | Flare connection with PVDF union nut |
| 14 High Purity version | HPW | High Purity, white |

# Technical data C60 PFA 3/5-way

## Medium

**Working medium:** Gaseous and liquid media (specified in the table below based on nominal size) – in particular high-purity media – which have no negative impact on the physical and chemical properties of the body and diaphragm material. Inert gases are excluded.

**Categorisation**

| Max. permissible operating pressure (PS) | Permissible working media/fluids acc. to nominal size | | | |
|---|---|---|---|---|
| | Group 1 fluids (hazardous) | | Group 2 fluids (other) | |
| | Gases (diagram 6) | Liquids (diagram 8) | Gases (diagram 7) | Liquids (diagram 9) |
| **6 bar** | Up to max. 1”/DN25 | > 1”/DN25 | | |

## Temperature

**Media temperature:** PFA valve body material (code 30): -10 — 150 °C
Observe pressure/temperature diagram

**Ambient temperature:** 0 — 60 °C

**Storage temperature:** 0 — 40 °C

## Pressure

**Operating pressure:** 0 — 6 bar
applied upstream

**Pressure/temperature diagram:**

**Valve body material: PFA, 3/5-way (code 30), actuator size 2**

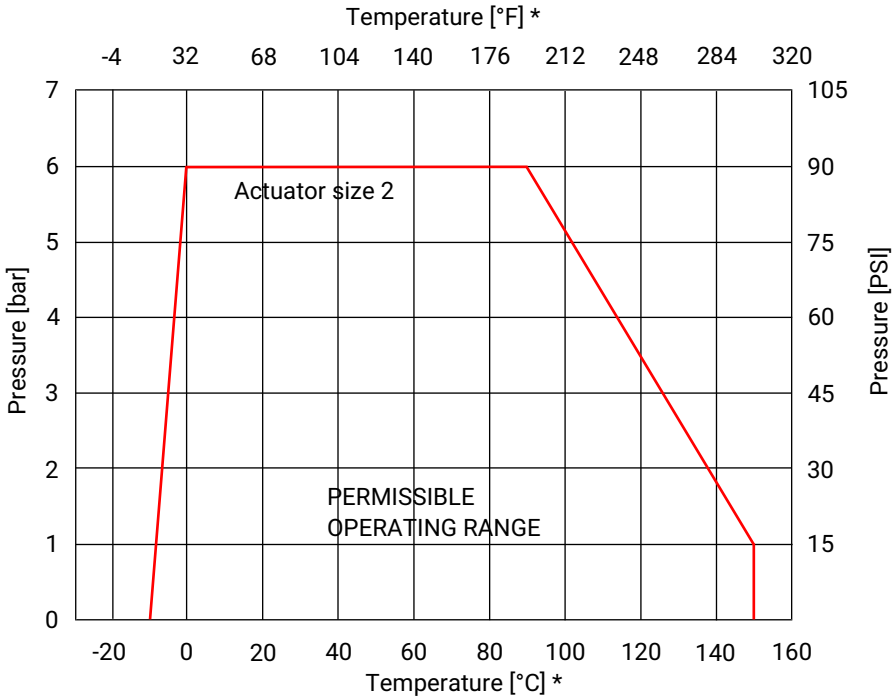


*** Note:** The temperature/pressure diagram is only an aid. The data refers to water as a working medium. A change of operating conditions or other media may result in deviations. In case of doubt, it is advisable to test the behaviour of the material under the definitive operating conditions in a test installation.
Temperatures below 0 °C can have a negative influence on the actuation speed.
The pressure-bearing valve bodies are designed to maintain their functionality unchanged for a theoretical time period of 25 years. Continuously rising medium temperatures would change this time period as follows:

- 24.4 years at 110 °C
- 8.2 years at 120 °C
- 3.4 years at 130 °C
- 1.4 years at 140 °C
- 1.0 year at 150 °C

**Kv values:**

| Actuator size | Body configuration | Connection size | Connection |
|---|---|---|---|
| | | X, Y, Z | Tube |
| **2** | **V** | 1/2" | 28.0 |
| | | 3/4" | 53.0 |

Kv values in l/min

If the 2/2-way body has a tube and pipe connection, the Kv values of the tube connection are used.

**Vacuum:**

400 mbar absolute

The service life of the valve may be affected if exposed to a greater vacuum or when valves are installed on the pump suction side.

## Pneumatic actuator

**Control pressure:**

| Control function | Actuator size | Control pressure |
|---|---|---|
| 1 | 2 | 4 - 7 bar |
| 2 | 2 | Max. 5 bar |

**Control pressure / operating pressure characteristics:**

**Control function 2 – normally open (NO)**

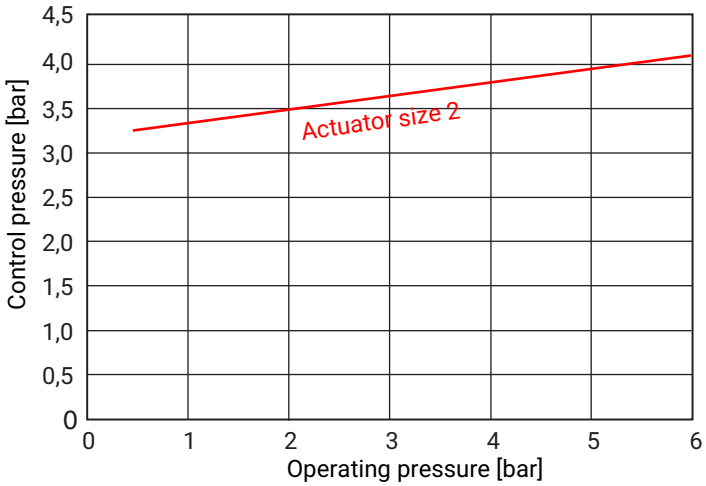


**Control air connection:** G 1/8

**Filling volume:**

| Actuator size | Control function | |
|---|---|---|
| | Normally closed (NC) | Normally open (NO) |
| **2** | 29.0 | 42.5 |

Filling volume in cm³

## Product conformities

| | |
|---|---|
| **Machinery Directive:** | 2006/42/EC |
| **Food:** | FDA |
| **EAC:** | The product is certified according to EAC. |
| **Pressure Equipment Directive:** | Categorisation in accordance with 2014/68/EU Article 4 and Annex II<br>Max. category **GIP** (sound engineering practice) |

## Mechanical data

| | |
|---|---|
| **Flow direction:** | Optional |

## Dimensions C60 PFA 3/5-way

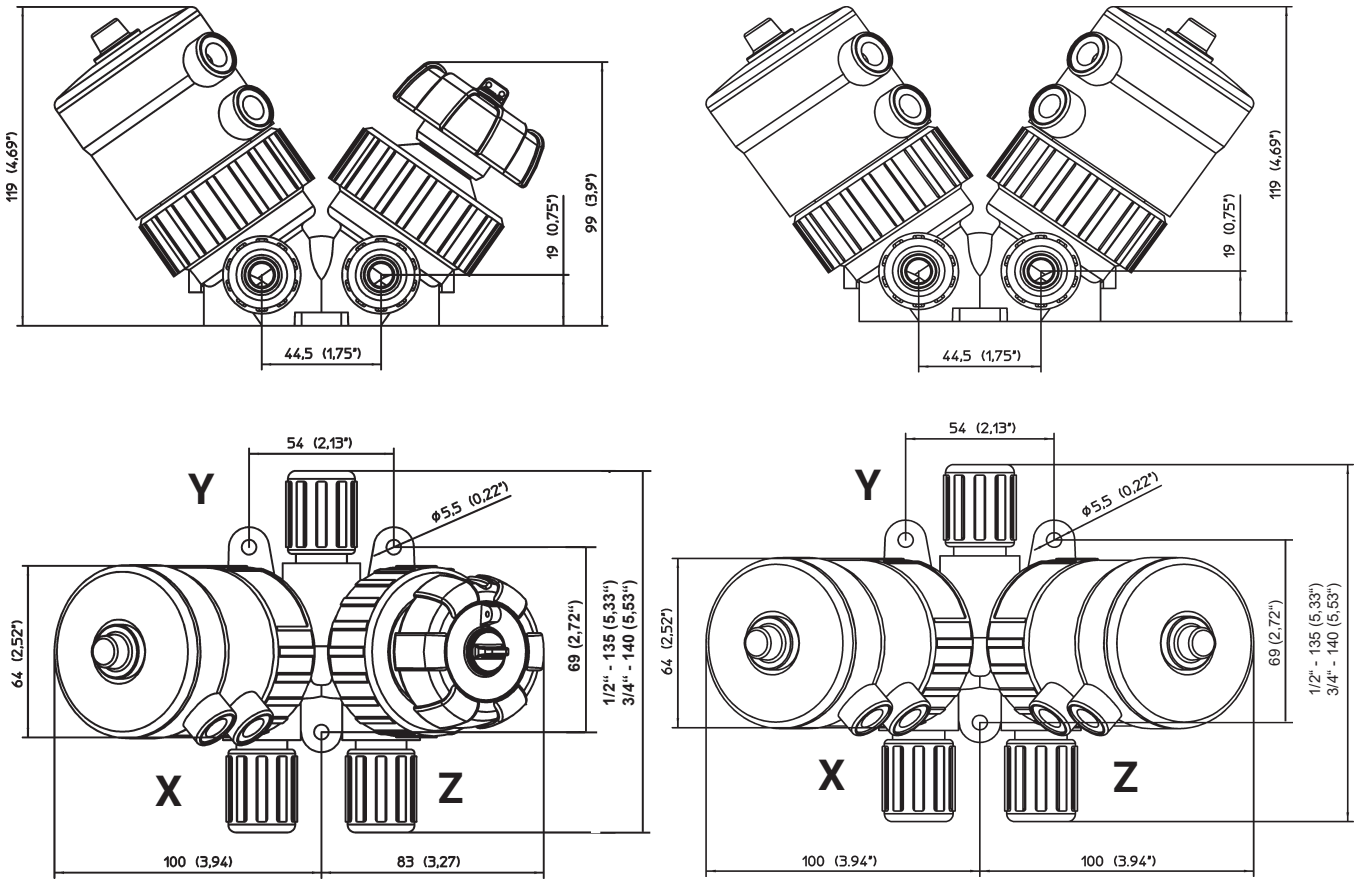


Dimensions in mm/inch

# GEMÜ C60 CleanStar PVDF

## Pneumatically operated diaphragm valve with PVDF valve body

## Features

- Ideal for high purity media (for example ultra pure water)
- High flow rate
- Minimal deadleg
- Optional flow direction
- Manufactured in cleanroom conditions
- Union end for easy radial installation and removal reduces maintenance costs

## Description

The ultra pure 2/2-way diaphragm valve GEMÜ C60 CleanStar® has a plastic piston actuator and is pneumatically operated. A stroke limiter and an optical position indicator are integrated as standard. All media wetted parts are produced from PFA or PTFE. This High Purity version of the CleanStar® series complies with strict purity standards and boasts excellent chemical resistance. These valves are therefore often used in the ultra pure water industry.

## Technical specifications

- **Media temperature :** -10 to 120 °C
- **Ambient temperature:** 0 to 60 °C
- **Operating pressure :** 0 to 6 bar
- **Nominal size:** DN 15
- **Body configurations:** 2/2-way bodies
- **Connection types:** Union end
- **Connection standards:** DIN
- **Body materials:** PVDF
- **Diaphragm materials:** PTFE/EPDM
- **Conformities:** EAC I FDA I TA Luft (German Clean Air Act)

Technical data depends on the respective configuration

# Availability of Cleanstar C60 PVDF

| Actuator size | DN | Union end (code 7, 78) | Code |
|---|---|---|---|
| **2** | **15** | X | **15** |

# Order data C60 PVDF

## Order codes

The order data provide an overview of standard configurations.

Please check the availability before ordering. Other configurations available on request.

| 1 Type | Code |
|---|---|
| Diaphragm valve, pneumatically operated,<br>plastic piston actuator,<br>optical position indicator,<br>stroke limiter | C60 |

| 2 DN | Code |
|---|---|
| DN 15 | 15 |

| 3 Body configuration | Code |
|---|---|
| 2/2-way body | D |

| 4 Connection type | Code |
|---|---|
| Union end with insert (socket) – DIN | 7 |
| Union end with insert (for IR butt welding) – DIN | 78 |

| 5 Valve body material | Code |
|---|---|
| PVDF | 20 |

| 6 Diaphragm material | Code |
|---|---|
| PTFE/EPDM one-piece | 54 |

| 7 Control function | Code |
|---|---|
| Normally closed (NC) | 1 |
| Normally open (NO) | 2 |

| 8 Actuator version | Code |
|---|---|
| Actuator size 2 | 2 |

| 9 High Purity version | Code |
|---|---|
| Without | |
| High Purity white | HPW |

## Order example

| Ordering option | Code | Description |
|---|---|---|
| 1 Type | C60 | Diaphragm valve, pneumatically operated,<br>plastic piston actuator,<br>optical position indicator,<br>stroke limiter |
| 2 DN | 15 | DN 15 |
| 3 Body configuration | D | 2/2-way body |
| 4 Connection type | 78 | Union end with insert (for IR butt welding) – DIN |
| 5 Valve body material | 20 | PVDF |
| 6 Diaphragm material | 54 | PTFE/EPDM one-piece |
| 7 Control function | 1 | Normally closed (NC) |
| 8 Actuator version | 2 | Actuator size 2 |
| 9 High Purity version | HPW | High Purity white |

# Technical data C60 PVDF

## Medium

**Working medium:** Gaseous and liquid media (specified in the table below based on nominal size) – in particular high-purity media – which have no negative impact on the physical and chemical properties of the body and diaphragm material. Inert gases are excluded.

**Categorisation**

| Max. permissible operating pressure (PS) | Permissible working media/fluids acc. to nominal size | | | |
|---|---|---|---|---|
| | Group 1 fluids (hazardous) | | Group 2 fluids (other) | |
| | Gases (diagram 6) | Liquids (diagram 8) | Gases (diagram 7) | Liquids (diagram 9) |
| **6 bar** | Up to max. 1”/DN25 | > 1”/DN25 | | |

## Temperature

**Media temperature:** Valve body material PVDF (code 20): -10 — 120 °C

Observe pressure/temperature diagram

**Ambient temperature:** 0 — 60 °C

**Storage temperature:** 0 — 40 °C

## Pressure

**Operating pressure:** 0 — 6 bar

applied upstream

**Pressure/temperature diagram:**

**Valve body material: PVDF (code 20)**

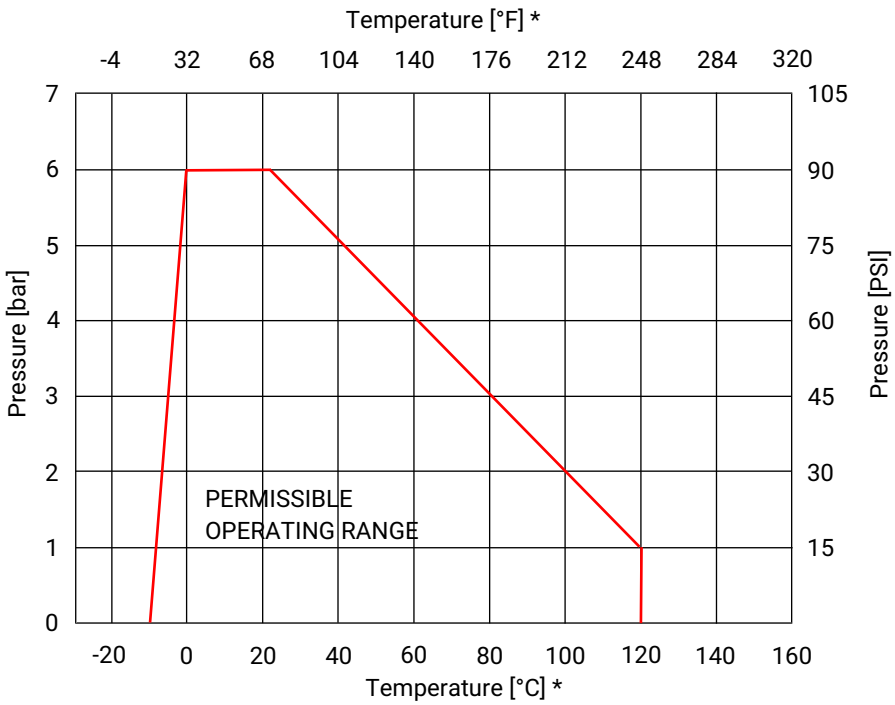


*** Note:** The temperature/pressure diagram is only an aid. The data refers to water as a working medium. A change of operating conditions or other media may result in deviations. In case of doubt, it is advisable to test the behaviour of the material under the definitive operating conditions in a test installation. Temperatures below 0 °C can have a negative influence on the actuation speed.

**Kv values:**

| Actuator size | DN | Connection size | Connection |
|---|---|---|---|
| | | Pipe | Union end |
| **2** | **15** | 1/2" | 68.0 |

Kv values in l/min

**Vacuum:**

400 mbar absolute

The service life of the valve may be affected if exposed to a greater vacuum or when valves are installed on the pump suction side.

## Pneumatic actuator

**Control pressure:**

| Control function | Actuator size | Control pressure |
|---|---|---|
| 1 | 2 | 4 - 7 bar |
| 2 | 2 | Max. 5 bar |

**Control pressure / operating pressure characteristics:**

**Control function 2 – normally open (NO)**

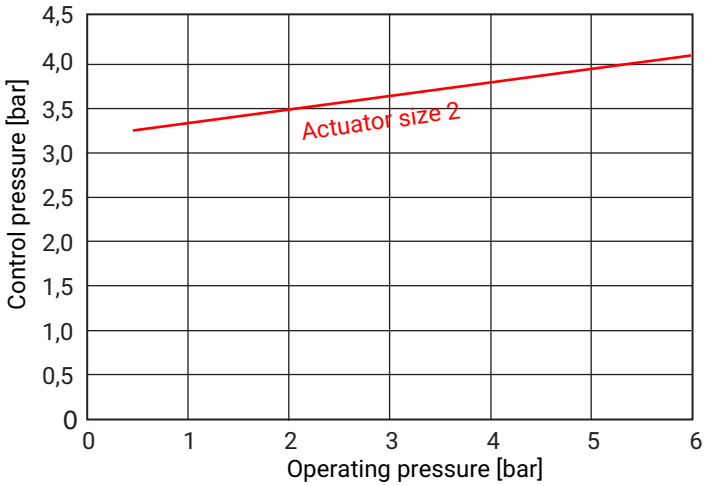


**Control air connection:** G 1/8

**Filling volume:**

| Actuator size | Control function | |
|---|---|---|
| | Normally closed (NC) | Normally open (NO) |
| **2** | 29.0 | 42.5 |

Filling volume in cm³

## Product conformities

| | |
|---|---|
| **Machinery Directive:** | 2006/42/EC |
| **Food:** | FDA |
| **EAC:** | The product is certified according to EAC. |
| **Pressure Equipment Directive:** | Categorisation in accordance with 2014/68/EU Article 4 and Annex II<br>Max. category **GIP** (sound engineering practice) |

## Mechanical data

| | |
|---|---|
| **Flow direction:** | Optional |

# Dimensions C60 PVDF

## Union end (code 7, 78)

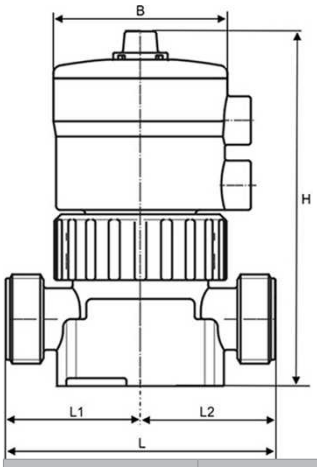


| Actuator size | DN | B | H | L | L1 | L2 |
|---|---|---|---|---|---|---|
| **2** | **15** | 65.0 | 133.0 | see connection dimensions | | |

Dimensions in mm

## Connection dimensions

### Union end (code 7)

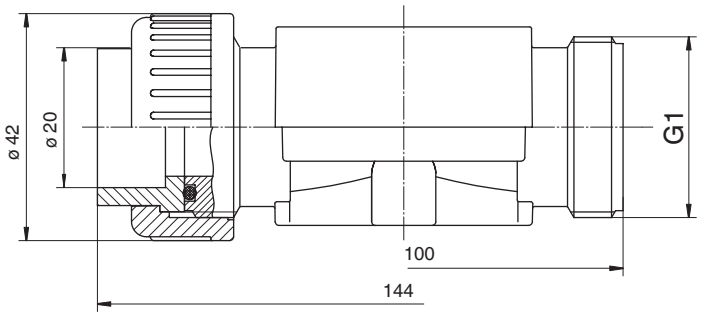


Dimensions in mm

### Union end (code 78)

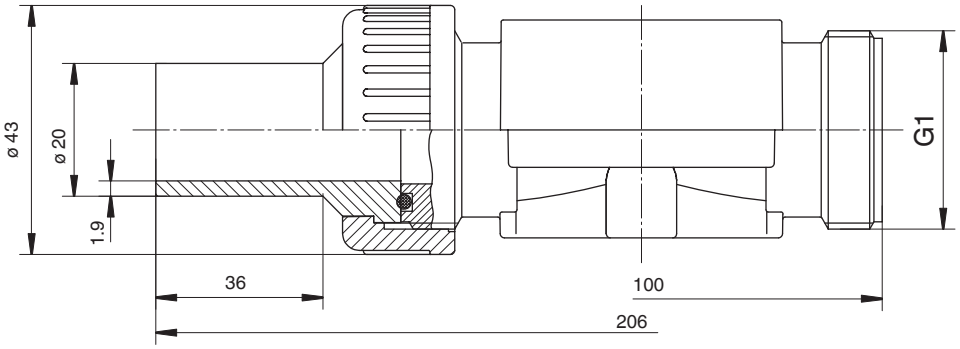


Dimensions in mm

## Mounting dimensions

2/2-way valve (code D)

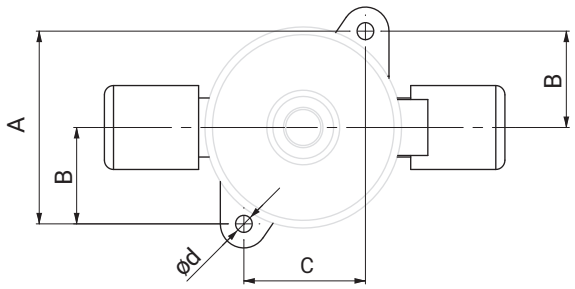


**2/2-way valves (code D)**

| Actuator size | ød | A | B | C |
|---|---|---|---|---|
| **2, 2E, 2 F, 2EF** | 5.5 | 61.5 | 31.0 | 40.0 |

Dimensions in mm

## Mounting holes, round and slotted hole

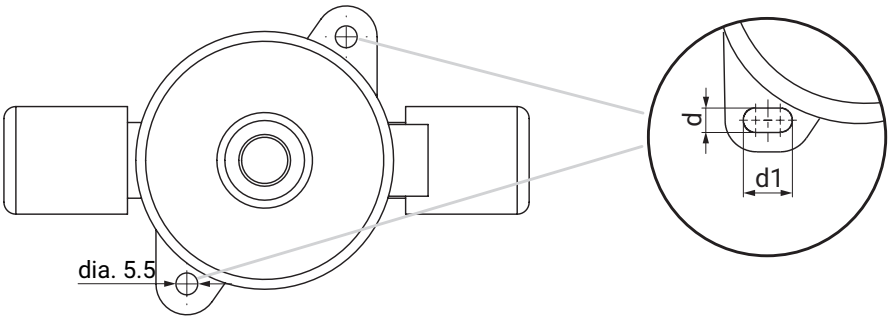


Actuator size 1-3
d = 6.0
d1 = 12.0

Dimensions in mm

Dear customers,
In order to simplify installation, we are switching over the mounting holes to slotted holes for all valve sizes.
Due to the gradual changeover in manufacturing, you may therefore receive valve bodies with new slotted holes and also with the old, round boreholes during this phase.
We ask for your understanding in this matter.

# GEMÜ C60 CleanStar SmartLine

## SmartLine pneumatically operated diaphragm valve with PP body

## Features

- Improved flow capability over PFA versions
- Affordable CleanStar type for applications with less strict requirements in terms of purity
- PTFE diaphragm
- Valve body made of PP-R natural
- Manufactured in a monitored atmosphere

## Description

This GEMÜ C60 CleanStar® 2/2-way diaphragm valve has a valve body made of PP and is therefore an affordable alternative to the ultra pure designs. It has been specifically developed for industrial applications with less strict purity requirements (for example solar energy industry). All media wetted parts are made of PP or PTFE (diaphragm). The exterior actuator parts are produced from PVDF. A stroke limiter and an optical position indicator are integrated as standard. A leakage sensor connection is provided.

## Technical specifications

- **Media temperature :** -10 to 80 °C
- **Ambient temperature:** 0 to 60 °C
- **Operating pressure :** 0 to 6 bar
- **Nominal sizes:** DN 10 to 32
- **Body configurations:** 2/2-way bodies
- **Connection types:** Butt weld spigot I Flare I Union end
- **Connection standards:** DIN
- **Body materials:** PP-R, natural
- **Diaphragm materials:** PTFE/EPDM
- **Conformities:** EAC I FDA I TA Luft (German Clean Air Act)

Technical data depends on the respective configuration

# Availability C60 SmartLine

| Actuator size | DN | Flare connection | Butt weld spigot | | Union end | Code |
|---|---|---|---|---|---|---|
| | | | Connection size X, Z | Connection size Z | | |
| **2** | **10** | 1/2” - 1/2” | - | On request | - | **8** |
| | **15** | - | 15 - 15 | On request | - | **15** |
| | **15** | 3/4” - 3/4” | - | On request | - | **12** |
| | **20** | - | 20 - 20 | On request | - | **20** |
| | **20** | 1” - 1” | - | On request | - | **16** |
| | **25** | - | 25 - 25 | On request | - | **25** |
| **3** | **20** | - | 20 - 20 | On request | - | **20** |
| | **25** | 1” - 1” | - | On request | - | **16** |
| | **25** | - | 25 - 25 | On request | - | **25** |
| | **25** | - | - | On request | 25 - 25 | **25** |
| | **25** | 1 1/4” - 1 1/4” | - | On request | - | **20** |
| | **32** | - | 32 - 32 | On request | - | **32** |

# Order data C60 SmartLine

## Order codes

The order data provide an overview of standard configurations.

Please check the availability before ordering. Other configurations available on request.

| 1 Type | Code |
|---|---|
| Diaphragm valve, pneumatically operated,<br>plastic piston actuator,<br>optical position indicator,<br>stroke limiter (for actuator size 1–3 only) | C60 |

| 2 Connection size | Code |
|---|---|
| 1/2”, international code: 8 | 8 |
| DN 15 | 15 |
| 3/4”, international code: 12 | 12 |
| DN 20 | 20 |
| 1”, international code: 16 | 16 |
| DN 25 | 25 |
| 1 1/4”, international code: 20 | 20 |
| DN 32 | 32 |

| 3 Housing configuration | Code |
|---|---|
| 2/2-way body | D |

| 4 Connection type | Code |
|---|---|
| Spigot for IR butt welding | 20 |

| 4 Connection type | Code |
|---|---|
| Flare connection with PVDF union nut | 75 |
| Flare connection with PFA union nut | 77 |
| Union end with DIN insert (for IR butt welding) | 78 |

| 5 Valve body material | Code |
|---|---|
| PP-R, natural | R5 |

| 6 Diaphragm material | Code |
|---|---|
| PTFE/EPDM one-piece | 54 |

| 7 Control function | Code |
|---|---|
| Normally closed (NC) | 1 |
| Normally open (NO) | 2 |

| 8 Actuator version | Code |
|---|---|
| Actuator size 2 | 2 |
| Actuator size 3 | 3 |

| 9 High Purity version | Code |
|---|---|
| Without | |
| Smart Line | HPS |

## Order example

| Ordering option | Code | Description |
|---|---|---|
| 1 Type | C60 | Diaphragm valve, pneumatically operated,<br>plastic piston actuator,<br>optical position indicator,<br>stroke limiter (for actuator size 1–3 only) |
| 2 Connection size | 8 | 1/2”, international code: 8 |
| 3 Housing configuration | D | 2/2-way body |
| 4 Connection type | 78 | Union end with DIN insert (for IR butt welding) |
| 5 Valve body material | R5 | PP-R, natural |
| 6 Diaphragm material | 54 | PTFE/EPDM one-piece |
| 7 Control function | 1 | Normally closed (NC) |
| 8 Actuator version | 2 | Actuator size 2 |
| 9 High Purity version | HPS | Smart Line |

# Technical data C60 SmartLine

## Medium

**Working medium:** Gaseous and liquid media (specified in the table below based on nominal size) – in particular high-purity media – which have no negative impact on the physical and chemical properties of the body and diaphragm material. Inert gases are excluded.

**Categorisation**

| Max. permissible operating pressure (PS) | Permissible working media/fluids acc. to nominal size | | | |
|---|---|---|---|---|
| | Group 1 fluids (hazardous) | | Group 2 fluids (other) | |
| | Gases (diagram 6) | Liquids (diagram 8) | Gases (diagram 7) | Liquids (diagram 9) |
| **6 bar** | Up to max. 1”/DN25 | > 1”/DN25 | | |

## Temperature

**Media temperature:** Valve body material: PP-R, natural (code R5): -10 — 80 °C

Observe pressure/temperature diagram

**Ambient temperature:** 0 — 60 °C

**Storage temperature:** 0 — 40 °C

## Pressure

**Operating pressure:** 0 — 6 bar

applied upstream

**Pressure/temperature diagram:**

**Valve body material: SmartLine (code R5)**

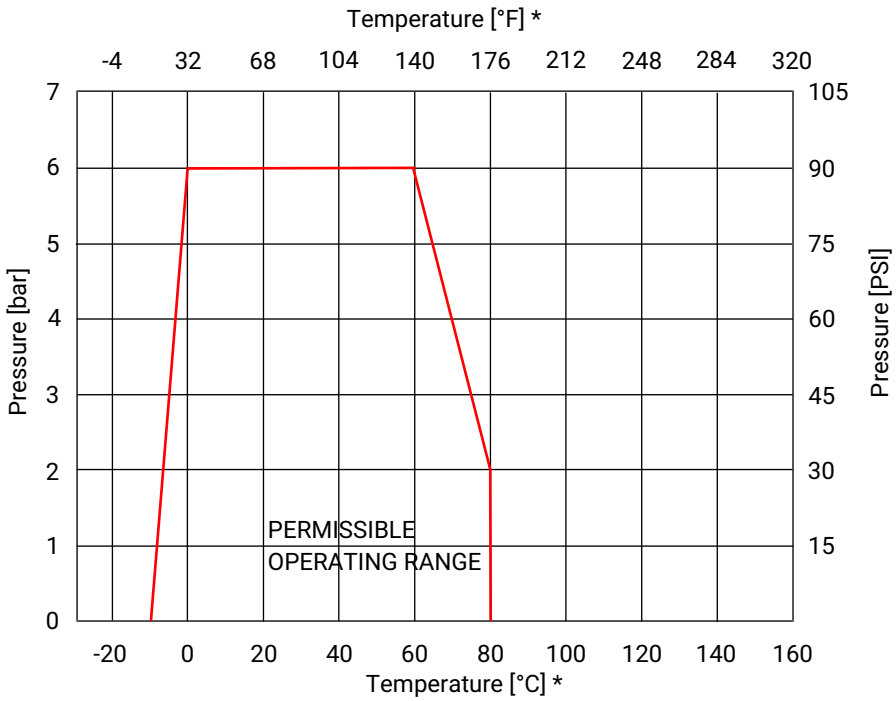


*** Note:** The temperature/pressure diagram is only an aid. The data refers to water as a working medium. A change of operating conditions or other media may result in deviations. In case of doubt, it is advisable to test the behaviour of the material under the definitive operating conditions in a test installation. Temperatures below 0 °C can have a negative influence on the actuation speed.

**Kv values:**

| Actuator size | Connection size | DN | Connection type | Connection | |
|---|---|---|---|---|---|
| | X, Z | | Code | Tube | Pipe |
| **2** | **1/2"** | **10** | **75, 77** | 34.2 | - |
| | | **15** | **20** | - | 82.5 |
| | **3/4"** | **15** | **75** | 86.7 | - |
| | | **20** | **20** | - | 83.7 |
| | | **20** | **20** | - | 171.7 |
| **3** | **1"** | **20** | **75, 77** | 93.3 | - |
| | | **25** | **20** | - | 94.0 |
| | | **20** | **75, 77** | 183.3 | - |
| | | **25** | **20** | - | 233.3 |
| | | **25** | **78** | - | 233.3 |
| | **1¼"** | **25** | **75, 77** | 238.3 | - |
| | | **32** | **20** | - | 238.3 |

Kv values in l/min

**Vacuum:**

400 mbar absolute

The service life of the valve may be affected if exposed to a greater vacuum or when valves are installed on the pump suction side.

### Pneumatic actuator

**Control pressure:**

| Control function | Actuator size | Control pressure |
|---|---|---|
| 1 | 2 | 4 - 7 bar |
| | 3 | 4.5–7 bar |
| 2 | 2, 3 | Max. 5 bar |

**Control pressure / operating pressure characteristics:**

**Control function 2 – normally open (NO)**

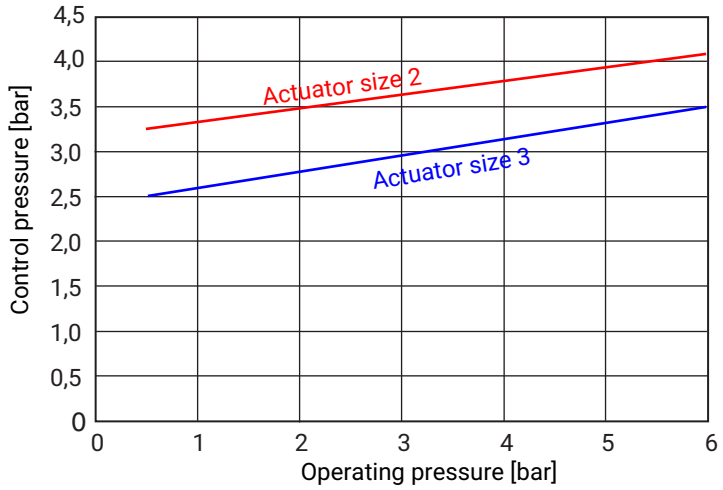


**Control air connection:**

G 1/8

**Filling volume:**

| Actuator size | Control function | |
|---|---|---|
| | Normally closed (NC) | Normally open (NO) |
| **2** | 29.0 | 42.5 |
| **3** | 63.0 | 95.0 |

Filling volume in cm³

## Product conformities

| | |
|---|---|
| **Machinery Directive:** | 2006/42/EC |
| **Food:** | FDA |
| **EAC:** | The product is certified according to EAC. |
| **Pressure Equipment Directive:** | Categorisation in accordance with 2014/68/EU Article 4 and Annex II<br>Max. category **GIP** (sound engineering practice) |

## Mechanical data

| | |
|---|---|
| **Flow direction:** | Optional |

# Dimensions C60 SmartLine

## Flare connection (code 75, 77)

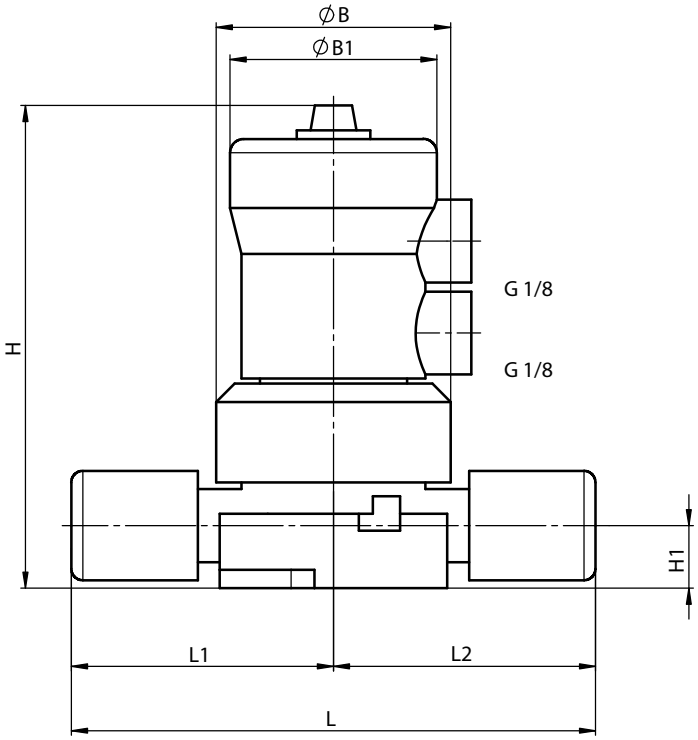


| Actuator size | Connection size | ØB | ØB1 | H | H1 | L | L1 | L2 |
|---|---|---|---|---|---|---|---|---|
| **2** | **1/2”** | 64.0 | 64.7 | 120.5 | 16.0 | 131.8 | 65.9 | 65.9 |
| | **3/4”** | 64.0 | 64.7 | 133.5 | 19.0 | 133.8 | 66.9 | 66.9 |
| | **1”** | 64.0 | 64.7 | 133.5 | 25.0 | 160.0 | 80.0 | 80.0 |
| **3** | **1”** | 80.0 | 86.0 | 162.5 | 25.0 | 180.0 | 90.0 | 90.0 |
| | **1¼”** | 80.0 | 86.0 | 162.5 | 25.0 | 192.0 | 96.0 | 96.0 |

Dimensions in mm

## *Butt weld spigot (code 20)*

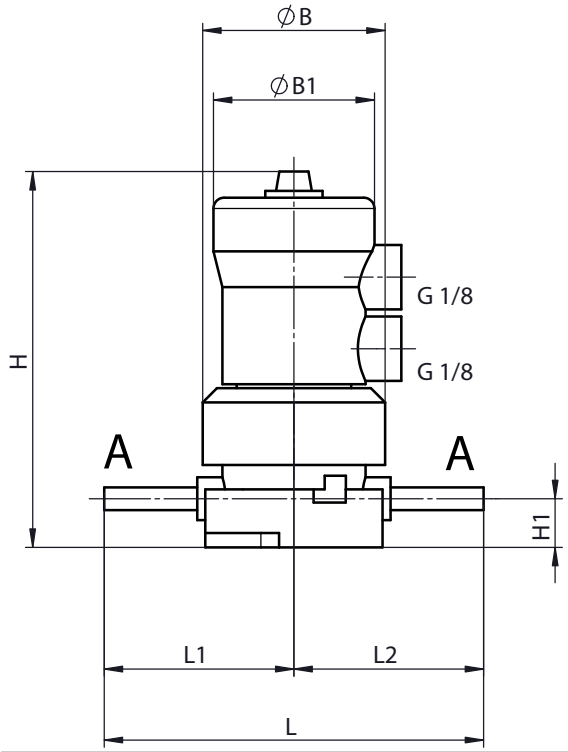


| Actuator size | Connection size | ØB | ØB1 | H | H1 | L | L1 | L2 | Spigot (A) | |
|---|---|---|---|---|---|---|---|---|---|---|
| | DN | | | | | | | | ød | ød1 |
| **2** | **15** | 64.0 | 64.7 | 133.5 | 19.0 | 131.0 | 65.5 | 65.5 | 20.0 | 16.2 |
| | **20** | 64.0 | 64.7 | 133.5 | 19.0 | 131.0 | 65.5 | 65.5 | 25.0 | 20.4 |
| | **25** | 64.0 | 64.7 | 133.5 | 19.0 | 145.0 | 72.5 | 72.5 | 32.0 | 26.0 |
| **3** | **20** | 80.0 | 86.0 | 162.5 | 25.0 | 166.0 | 83.0 | 83.0 | 25.0 | 20.4 |
| | **25** | 80.0 | 86.0 | 162.5 | 25.0 | 166.0 | 83.0 | 83.0 | 32.0 | 26.0 |
| | **32** | 80.0 | 86.0 | 162.5 | 25.0 | 172.0 | 86.0 | 86.0 | 40.0 | 32.6 |

Dimensions in mm

## *Union end (code 78)*

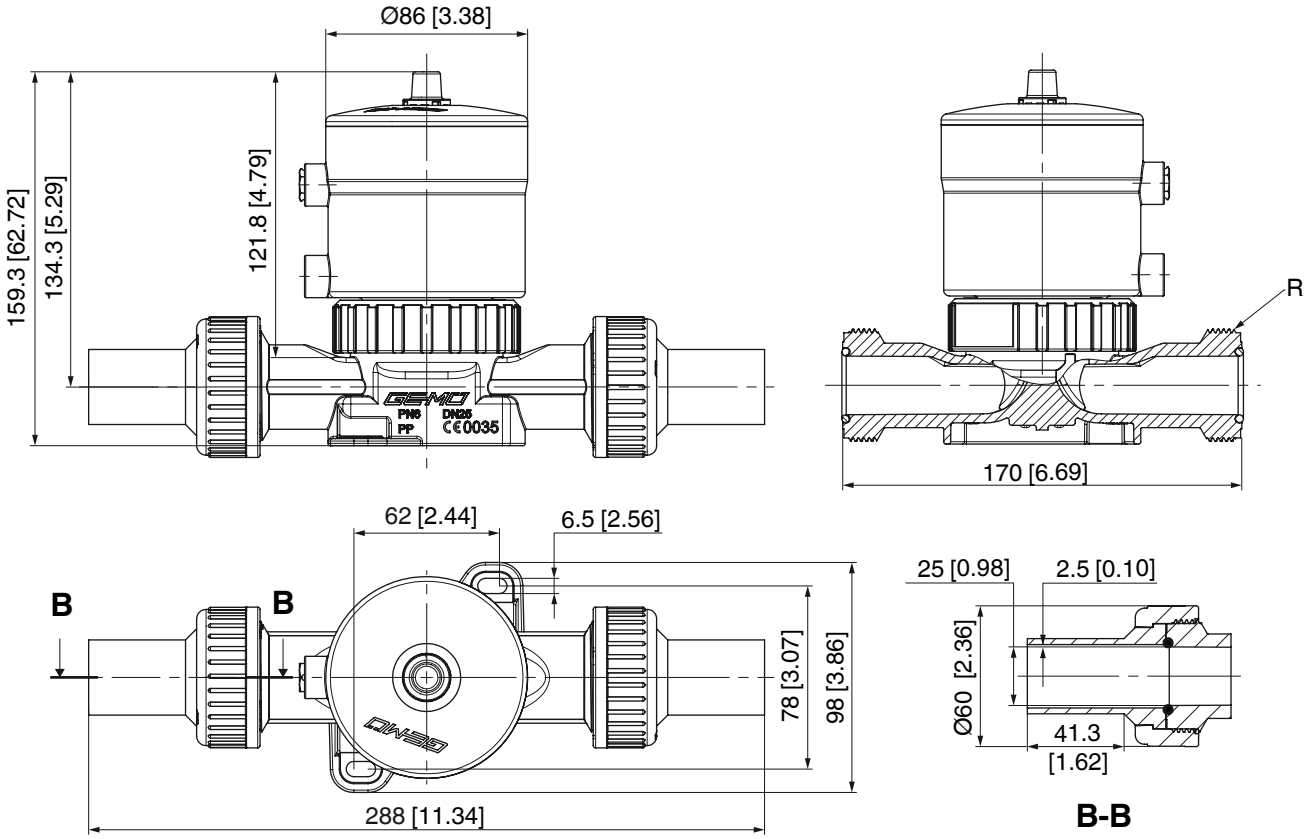


Dimensions in mm/inch

## Mounting dimensions

2/2-way valve (code D)

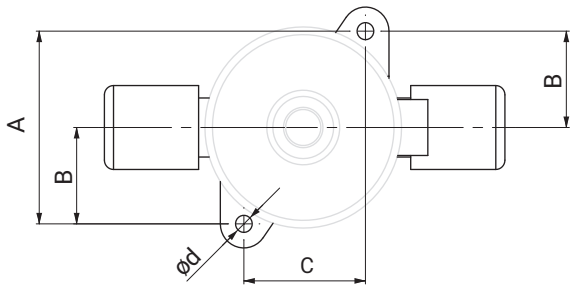


**2/2-way valves (code D)**

| Actuator size | ød | A | B | C |
|---|---|---|---|---|
| **2, 2E, 2 F, 2EF** | 5.5 | 61.5 | 31.0 | 40.0 |
| **3, 3E, 3 F, 3EF** | 6.5 | 78.0 | 39.0 | 56.0 |

Dimensions in mm

## Mounting holes, round and slotted hole

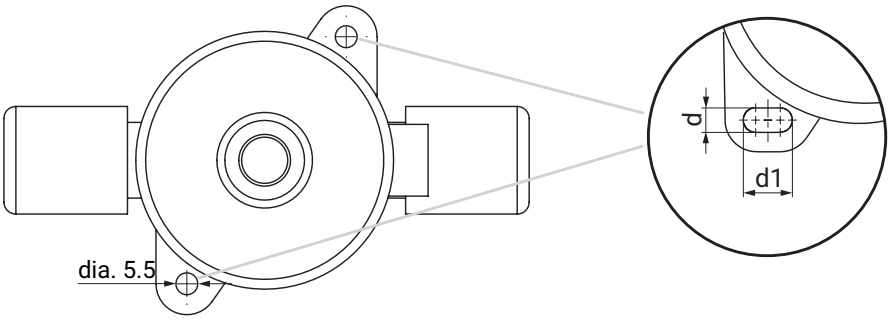


Actuator size 1-3
d = 6.0
d1 = 12.0

Dimensions in mm

Dear customers,
In order to simplify installation, we are switching over the mounting holes to slotted holes for all valve sizes.
Due to the gradual changeover in manufacturing, you may therefore receive valve bodies with new slotted holes and also with the old, round boreholes during this phase.
We ask for your understanding in this matter.

# Accessories

**GEMÜ CFSTFZ/CFSTNZ**

**Service tool for flare union nuts (CFSTFZ) or Nexus Connect union nuts (CFSTNZ)**

This service tool is designed for fitting flare union nuts or Nexus Connect® union nuts in all available materials. To use the CFSTFZ service tool, a torque wrench is also required to fit the flare connection. The CFSTNZ service tool applies the required torque via an integrated mechanism.

**GEMÜ 1098**

**Flaring mandrel**

The flaring mandrel GEMÜ 1098 is an assembly tool for flare connections or Nexus Connect® connections.

**GEMÜ FlareStar**

**PFA fittings**

Over 1,000 different types of fitting are produced under cleanroom conditions in compliance with DIN 16901-140. The fitting bodies are made of PFA, while the union nuts are made of PFA, PVDF or CPFA. We can also supply all standard market connections.

**GEMÜ TU**

**PFA tubing**

The GEMÜ TU product range comprises ultra pure and standard PFA tubing, which is the preferred option for applications with high-purity media and other chemicals.

**GEMÜ C67 STA**

**Service tool for actuators**

Service tool for installation and removal of the central union nut.

Subject to alteration | 09.2026 | 89004319

GEMÜ Gebr. Müller Apparatebau GmbH & Co. KG
Gert-Müller-Platz 1, 74635 Kupferzell, Germany
Phone +49 (0) 7940 1230 · info@gemue.de
www.gemu-group.com