# GEMÜ 12A0

## Intelligent electrical position indicator

## Features

- IO-Link communication and programming interface (incl. SIO mode via 24 V DC signals)
- Self-initialization through autonomous detection of end positions
- Condition monitoring through integrated sensor system
- Configuration and status diagnostics via Bluetooth (GEMÜ app)
- Contactless position detection
- Electrical and mechanical position indicator as well as advanced diagnostic messages via high-visibility LED
- Uniform mounting kit with integrated air supply and control pressure detection

## Description

The GEMÜ 12A0 position indicator is compatible with all pneumatically actuated process valves of the new platform generation as well as with quarter turn valves. The position sensor determines the valve position precisely, reliably and wear-free. The current valve position is indicated by far-sighted LEDs and signalled back via electrical signals. The innovative position indicator is characterised by modern communication interfaces, integrated sensors and the option of operation via the GEMÜ app.

## Technical specifications

- **Ambient temperature:** -20 to 60 °C
- **Supply voltages:** 18 - 30 V DC I 24 V DC
- **Electrical connection types:** M12 plug
- **Electrical interfaces:** IO-Link/SIO mode (24 V DC signals)
- **Protection class :** IP 65. IP 67

Technical data depends on the respective configuration

webcode: GW-12A0

IO-Link

# Product description

## Construction

Actuator **A** must be ordered separately.

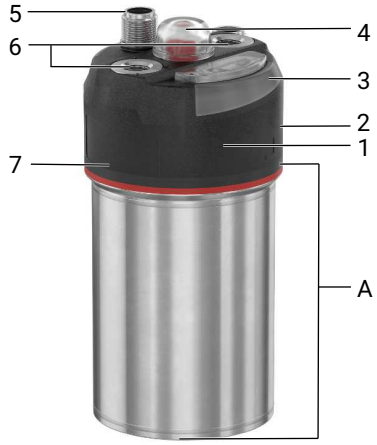


*Fig. 1:* Linear design

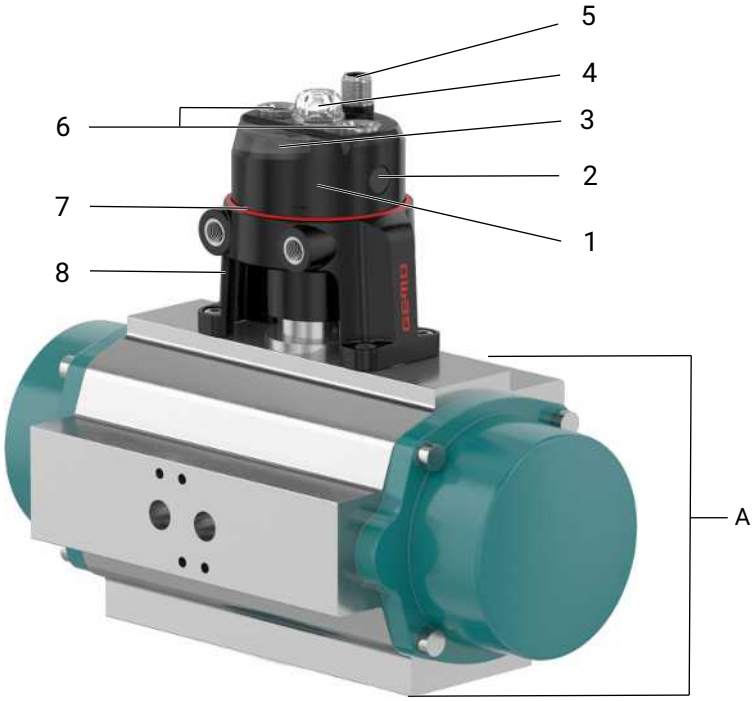


*Fig. 2:* Rotary design

| Item | Name | Materials |
|---|---|---|
| 1 | Housing cover, black | PC |
| 2 | Housing ventilation | ePTFE |
| 3 | LED signalling window | PC |
| 4 | Transparent cap | PC |
| 5 | Electrical threaded connection | SS/1.4305 |
| 6 | Pneumatic connectors | SS/1.4305 |
| 7 | Seal | FKM |
| 8 | Mounting bracket (only rotary design) | PC |
| | Mounting plate (only BG1, linear) | Anodized aluminium |

## High visibility LEDs

As well as the electrical position indicator and error output, a visual signal of the various operating conditions is emitted by high visibility LEDs **1** integrated into the housing. The LEDs are arranged so that two light bands integrated on the side are illuminated, making the condition also apparent from a distance. The following conditions are illustrated here:

**Valve position indicator** [1)]

| Colour of high visibility LEDs | | Function |
|---|---|---|
| Standard | Inversed [2)] | |
| Green | Orange | Process valve in OPEN position |
| Orange | Green | Process valve in CLOSED position |
| Flashing green | Flashing orange | Movement of process valve in OPEN direction |
| Flashing orange | Flashing green | Movement of process valve in CLOSED direction |

[1)] The valve position indicator can be dimmed or deactivated via parameters

[2)] Inversed display can be activated via parameters

**Status indication**

| Colour of high-visibility LEDs | Function |
|---|---|
| Standard | |
| Flashing yellow/white | Initialization active |
| Flashing white | Localization active |
| Flashing orange/red | General warning active |
| Flashing red | General error active |
| Flashing yellow/turquoise | Maintenance required |
| Flashing blue (briefly) | Wireless connection established |
| Flashing purple/green | Internal update process active |
| Flashing turquoise (briefly) | Device start |
| Lit up red (permanently) | Serious error (device faulty) |

# Overview of available functions

| Function |
|---|
| Self-commissioning function (autonomous detection of end positions) |
| Start initialization |
| Deactivation/dimming of high-visibility position indicator |
| Position feedback OPEN |
| Position feedback CLOSED |
| Reading option for the current valve position (0.0 to 100.0%) |
| Reading option for initialized end positions |
| Reading option for the determined travel time |
| Reading option for the condition monitoring sensor values<br>(temperature, air humidity, internal pressure) |
| Adjustable warning threshold for exceeding or not reaching the sensor values |
| Transmission of warning or error messages |
| Automatic detection of the valve control function |
| Monitoring the valve movement profile for deviations (diagnostic function) |
| Feedback for operating mode |
| Location function |
| Inversion of LED colours |
| Inversion of feedback signals |
| Switch point setting (tolerance) |
| Operating hours counter reading |
| Cycle counter reading (on-site) |
| Total cycle counter reading |
| Digital parameter representation |
| Configurable process data variables |
| Configurable functions of standard IO pins 1 and 2 (SIO operation) |
| App operating option (BLE) |
| Reset to default settings |

# Sensor system for status monitoring

Various sensors are installed on the device which make it possible to diagnose the status. The measured values are output on the electrical interface(s) and so can be processed. Additionally, for each relevant measured value, warning thresholds are defined that generate a warning or error message when they are not reached or are exceeded. This means that unacceptable influences that would damage the device or reduce its service life can be reacted to in a timely manner.

The following measured values are detected internally:

- Internal temperature
- Internal humidity
- Internal pressure
- Control air supply pressure
- Installation position (in two directions)
- Acceleration (in three axes)
- Current consumption
- Supply voltage

The axes for evaluating the acceleration in the X, Y and Z directions are defined in accordance with the visualisation below.

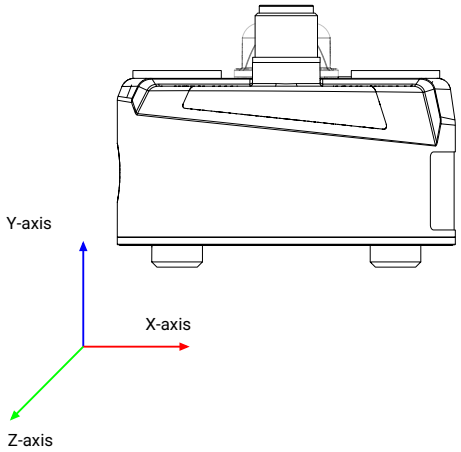


The following correlation is provided in the details of the mounting angles:

- The frontal inclination angle corresponds to the Z axis.
- The side inclination angle corresponds to the X axis.

# Integrated diagnostic functions

GEMÜ 12A0 has integrated diagnostic functions that provide information early on about irregularities in the switch characteristics of pneumatically operated process valves. These diagnostic functions continuously monitor the movements of the actuator and detect deviations from normal operating behaviour.

This can generate the following messages:

- **“No movement or incorrect movement in the Open/Closed direction”:**
  Signals that no or incomplete movement has taken place (e.g. due to no or insufficient control pressure or mechanical blockage).
- **“Duration error in the Open/Closed direction”:**
  Indicates an above-average switching time, e.g. in the event of a pressure drop or mechanical resistance.

These diagnostic functions, including the resulting diagnostic messages, can be deactivated via parameters.

# Range overview

### Compatibility with linear actuators on the new platform generation

Every size is compatible with one or more actuator sizes of valves with linear actuators on the new platform generation. Please ensure that the size is compatible with the actuator size on the selected valve.

| Size 12A0 direction of movement code L (linear) and air supply code I (integrated) | Compatible linear actuator size |
|---|---|
| 1 | 1 |
| 2 * | 2, 3 |
| 3 | 4, 5, 6 |

Size 1 ≙ size 2 plus mounting plate and longer indicator spindle

* Special function code X = explosion protection optionally possible

### Compatibility with quarter turn actuators

Compatibility with quarter turn actuators also depends on the size and can be found in the following table:

| Size 12A0 direction of movement code R (rotary) and air supply code E (external) | Quarter turn actuator compatibility |
|---|---|
| 1 | - |
| 2 | (VDI/VDE 3845, borehole pattern 80x30 mm, shaft height 20 and 30 mm) * |
| 3 | - |

* Other borehole patterns on request

# Order data

The order data provide an overview of standard configurations.

Please check the availability before ordering. Other configurations available on request.

Note: If there are restrictions on the customer or on the system side which prohibit the use of a Bluetooth interface, we recommend using an order variant with a deactivated Bluetooth interface or without a Bluetooth interface.

- For designs with a Bluetooth interface, the option also exists to deactivate the interface via parameters independently later or to uninstall the type E1B0 Bluetooth module.
- For designs without a Bluetooth interface, the option also exists to retrofit the interface independently later.

Note: The IO-Link version also supports an SIO mode as standard. This means that conventional 24 V DC signals are used.

## Order codes

| 1 Type | Code |
|---|---|
| Intelligent electrical position indicator | 12A0 |

| 2 Electrical interface | Code |
|---|---|
| IO-Link | IO |

| 3 Action | Code |
|---|---|
| Any | 0 |

| 4 Direction of movement | Code |
|---|---|
| Linear | L |
| Rotary | R |

| 5 Device version | Code |
|---|---|
| Basic | B |

| 6 Interface/size | Code |
|---|---|
| Size 1 | 1 |
| Size 2 | 2 |
| Size 3 | 3 |

| 7 Body material | Code |
|---|---|
| Plastic | P |

| 8 Options | Code |
|---|---|
| Without | 0 |

| 9 Electrical connection | Code |
|---|---|
| M12 connector | 1 |

| 10 Air supply | Code |
|---|---|
| Integrated | I |
| External | E |

| 11 Wireless interface | Code |
|---|---|
| Without | 0 |
| Bluetooth | B |

| 12 Local user interface | Code |
|---|---|
| LEDs | L |

| 13 Mechanical option | Code |
|---|---|
| Without | 0 |

| 14 Special version | Code |
|---|---|
| Without | |

| 14 Special version | Code |
|---|---|
| Explosion protection | X |

## Order example

| Ordering option | Code | Description |
|---|---|---|
| 1 Type | 12A0 | Intelligent electrical position indicator |
| 2 Electrical interface | IO | IO-Link |
| 3 Action | 0 | Any |
| 4 Direction of movement | L | Linear |
| 5 Device version | B | Basic |
| 6 Interface/size | 2 | Size 2 |
| 7 Body material | P | Plastic |
| 8 Options | 0 | Without |
| 9 Electrical connection | 1 | M12 connector |
| 10 Air supply | I | Integrated |
| 11 Wireless interface | B | Bluetooth |
| 12 Local user interface | L | LEDs |
| 13 Mechanical option | 0 | Without |
| 14 Special version | | Without |

# Technical data

## Medium

**Working medium:** Compressed air and inert gases

## Temperature

**Ambient temperature:** -20 – 60 °C (standard version)
10–40 °C (special version code X)

**Control medium temperature:** -20 — 60 °C

**Storage temperature:** -20 — 70 °C

## Pressure

**Control pressure:** max. 10 bar
The applied pressure must not exceed the maximum control pressure of the process valve.

## Product compliance

**EMC Directive:** 2014/30/EU

**RoHS Directive:** 2011/65/EU

**Approval:** Fieldbus/communication: IO-Link specification V1.1.4

**Explosion protection:** 2014/34/EU

**ATEX marking (only special function X):**
Ⓔx Gas: II 3G Ex ec IIC T4 Gc X
Ⓔx Dust: II 3D Ex tc IIIC T100°C Dc X

**FMEDA:**

| | |
|---|---|
| **Product description:** | Intelligent GEMÜ electrical position indicator 12A0 |
| **Device type:** | B |
| **Software version:** | V1.1.X.X |
| **Fail safe function:** | The fail-safe state is defined as a High (24 V DC) signal at pin 4 (device version 24 V IO-Link) |
| **HFT (hardware fault tolerance):** | 0 |

## Mechanical data

**Installation position:** Optional

**Weight:**

| | |
|---|---|
| Size 1, linear | 210 g |
| Size 2, linear | 130 g |
| Size 2, rotary | 235 g |
| Size 3, linear | 290 g |

**Linear travel sensor:**

| | Size 1 and 2 | Size 3 |
|---|---|---|
| **Minimum stroke:** [1] | 2.0 mm | 5.0 mm |
| **Maximum stroke:** [2] | 29.0 mm | 45.0 mm |
| **Correlation between travel sensor spindle/valve position** [3] | Retracted (top) ≙ 100% (valve open)<br>Extended (bottom) ≙ 0% (valve closed) | |

[1] Relevant for successful initialization.

[2] Corresponds to the linearized stroke range.

[3] Relative to the setting value of the “Inversion of travel sensor signal” parameter = 0 (deactivated). If the inversion of the travel sensor signal is activated, the correlation is correspondingly inverted.

**Rotary travel sensor:**

| | |
|---|---|
| **Minimum angle of rotation:** [1] | 7° |
| **Maximum angle of rotation:** | -7° to 97° |
| **Mounting bracket:** | Suitable for actuators with VDI/VDE 3845 interface, borehole pattern 80x30 mm, shaft height 20 and 30 mm |

[1] Relevant for successful initialization

## Operating conditions

**Ambient conditions:** Use indoors and outdoors
Dry and wet environments

**Height:** Up to 2000 m (above sea level)

**Relative air humidity:** 0–100%

**Protection class:**

| Single device as supplied | Mounted to actuator/mounting bracket |
|---|---|
| Unintended operating condition | Size 1–3, linear and size 2, rotary: **IP 65**<br><br>Size 2, linear: **IP 67** (only for piped air outlet) |

**Degree of contamination:** 4 (pollution degree)

## Electrical data

**Supply voltage Uv:** 18 - 30 V DC (in accordance with IO-Link specification)

**Duty cycle:** Continuous duty

**Reverse polarity protection:** yes

**Electrical protection class:** III

**Current consumption:**

| SIO mode | IO-Link mode |
|---|---|
| Maximum 40 mA | Maximum 50 mA |

**Electrical connection type:** 1 x 5-pin M12 plug (A-coded)

**Switching characteristic:**

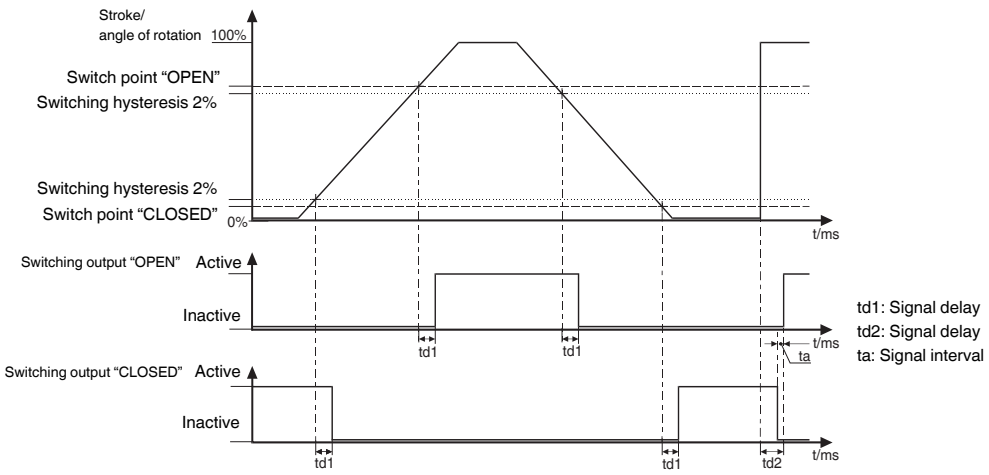


Switch points in data in percent of the programmed stroke, with reference to the lower end position (0%)

**Switch points:**

| | Size 1 and 2 | Size 3 |
|---|---|---|
| **Switch point CLOSED** | Default setting: 12% (adjustable from 0–90%) | |
| **Switch point OPEN** | Default setting: 75% (adjustable from 10–100%) | |
| **Min. switch point CLOSED** | 0.8 mm for linear/2° for rotary | 1.2 mm |
| **Min. switch point OPEN** | 0.5 mm for linear/2° for rotary | 0.75 mm |
| **Switching hysteresis** | 2%<br>(relative to the initialized range upstream of the respective switch point) | |

If the percentage switch points dependent on the programmed stroke are less than the permissible min. switch points, the min. switch points will apply automatically.
The min. switch points refer to the value before achieving the initialized end position values for the respective item. For example, the CLOSED end position is output at the very latest from 0.8 or 1.2 mm/2° before reaching the initialized end position value of the CLOSED position. The detection and feedback of end positions can also take place earlier (dependent on the stroke or angle of rotation) due to the set percentage value of switch point OPEN or CLOSED.
A difference of at least 10% must be maintained between the switch point settings.

**Interface:**

| | Bluetooth Low Energy (only with integrated wireless interface) | IO-Link |
|---|---|---|
| Function | Parameterization, configuration, diagnostics and operation | Parameterization, configuration, diagnostics and operation |
| Prerequisite | Compatible smartphone/tablet with Android or iOS [1)]<br>• Apple iOS: Version 16.6 or higher<br>• Android: Version 8.0 (“Oreo”) or higher<br>• Bluetooth 4.0 LE or newer | IO-Link master spec. 1.1 |
| Version | Bluetooth 5.4 (Low Energy) | IO-Link spec. V1.1.4 |

[1)] The compatible GEMÜ app can be downloaded in the respective stores (Apple App Store or Google Play Store).

## *Wireless-specific parameters*

**Technology:** Bluetooth Low Energy (only possible in conjunction with the GEMÜ app)

**Frequency:** 2.4 GHz (2.4–2.4835 GHz)

**Output power:** Max. 11.2 dBm

## Digital outputs (Standard IO pins 1* and 2)

*Standard IO pin 1 can be used as input or output depending on the selected function. Default setting = Output

**Note:** Outputs are overload proof. In the event of overheating due to too long an overload, the device switches off until the temperature has fallen below the temperature threshold once more.

**Type of contact:** Push-Pull

**Switching current:** Max. 100 mA

**Voltage drop Vdrop:** max. 0.9 V DC at 100 mA

**Switching voltage:** $+U_v - V_{drop}$

## Optional digital input (Standard IO pin 1*)

*Standard IO pin 1 can be used in SIO operation as input or output depending on the selected configuration. Default setting = Output

**Input current:** max. 50 µA

**Input voltage:** max. 30 V DC

**High level:** > 12.5 V DC

**Low level:** < 9 V DC

## Sensor system for status monitoring

| Value | Value range | Sensor resolution | Deviation | Typical deviation | Long-term stability |
|---|---|---|---|---|---|
| Internal temperature | -40 to 100 °C | 0.016 °C | ± 1.60 °C [1] | ± 0.20 °C [1] | < ± 0.02 °C/year |
| Internal humidity | 0 to 100% | 0.03% | ± 3.5% between 20 to 80%<br>± 6.5% between 0 to 100% | ± 2% between 20 to 80%<br>± 3.5% between 0 to 100% | ± 0.25%/year |
| Internal pressure | 260 to 1260 mbar | 24 bit | ± 1.0 mbar | ± 0.1 mbar | - |
| Control air supply pressure | 0 to 30 bar | 1.31 mbar | ± 110 mbar | ± 30 mbar | ± 30 mbar/year |
| Installation position (in two directions) | -180° to 180° | 16 bit | ± 3.1° [2] | | - |
| Acceleration (in three axes) | -156.96 m/s² to 156.96 m/s² | 16 bit | ±1.48 m/s² | ± 0.52 m/s² | - |
| Current consumption | 0 to 375 mA | 16 bit | ±3.0 mA | ±0.5 mA | - |
| Supply voltage | 0 to 36 V | 16 bit | ±0.5 V [3] | ±0.05 V [3] | - |

[1] The value is measured on the inside of the housing with the corresponding influences of the device electronics (e.g. heating).

[2] The data refers to a vibration-free status. In the case of vibrations, the deviation can be significantly greater or a value can no longer be determined.

[3] In the case of increased loads, the outputs in SIO mode can show an additional deviation of max. 0.5 V.

# Dimensions

Linear BG1

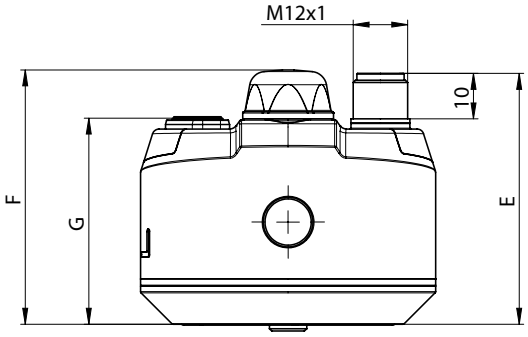


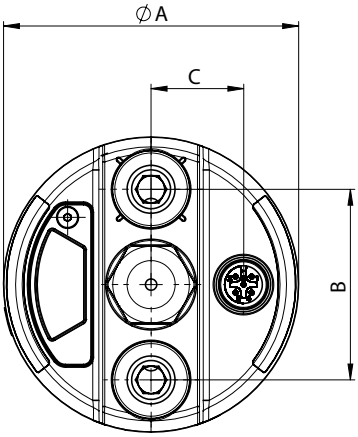


Linear BG2

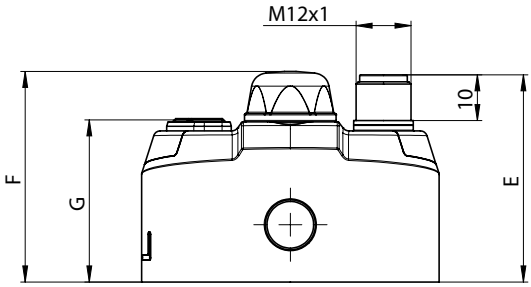


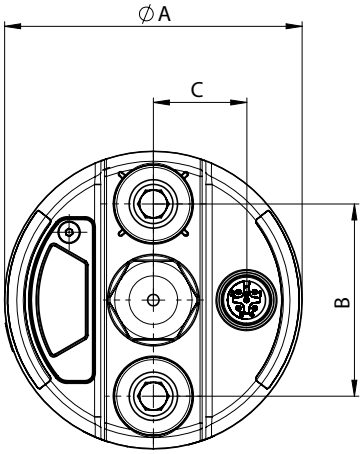


Linear BG3

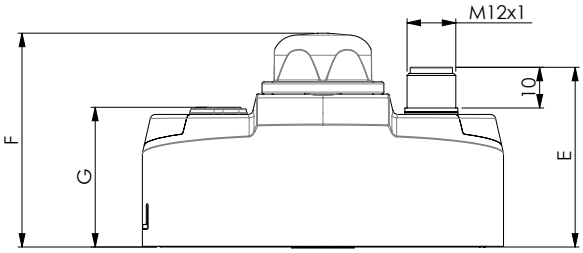


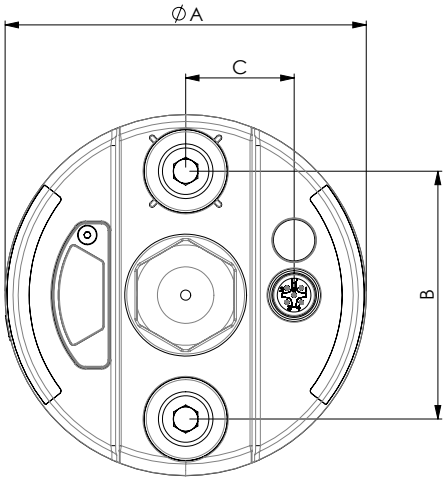

## Rotary BG2

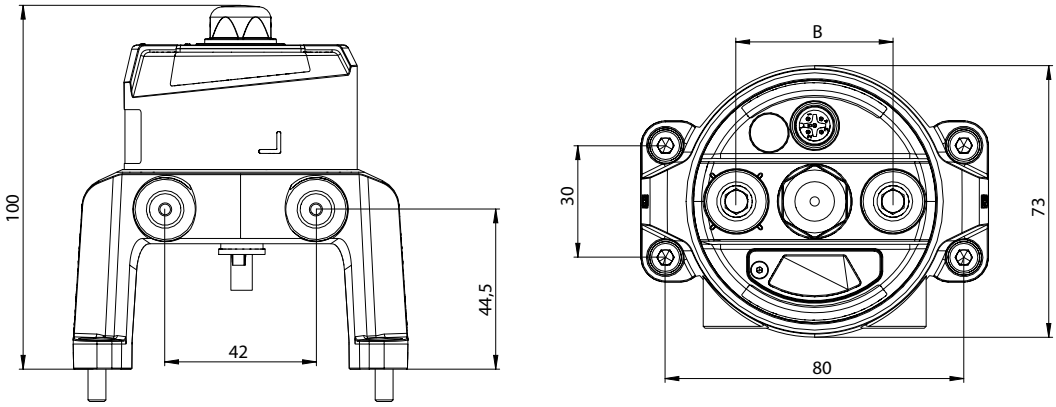


| | Dia. A | B | C | E | F | G |
|---|---|---|---|---|---|---|
| BG1 (only linear) | 65.0 | 42.0 | 20.4 | 55.3 | 56.0 | 45.4 |
| BG2 (linear and rotary) | 65.0 | 42.0 | 20.4 | 45.3 | 46.0 | 35.4 |
| BG3 (linear) | 88.9 | 61.0 | 26.7 | 44.25 | 52.65 | 34.4 |

BG = size
Dimensions in mm

# Electrical connection

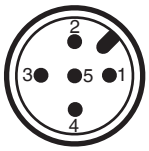


| | Description |
|---|---|
| 1 | Uv+, 24 V DC, supply voltage |
| 2 | I/Q/Standard IO pin 1* (24 V DC, OPEN end position output) |
| 3 | Uv-, GND |
| 4 | C/Q IO-Link/Standard IO pin 2** (24 V DC, CLOSED end position output) |
| 5 | n.c.*** |

* Depending on the selected configuration of the associated “Standard IO pin 1 function” parameter, can be used as an input or output in SIO operation. Default setting = OPEN end position output

** Output function in SIO operation can be configured via the associated “Standard IO pin 2 function” parameter.
Default setting = CLOSED end position output

* Pin 5 is not relevant for the function and may therefore be populated (visible) or not populated (not present).

# Pneumatic connection

## Linear design

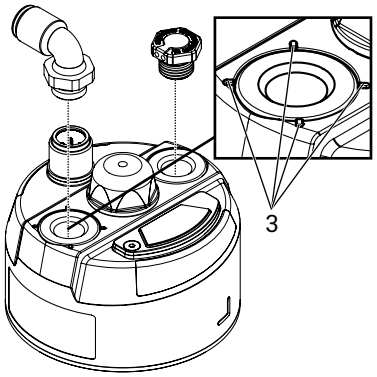


Note: The figure shows the attachment options for single acting (NO or NC)

| Connection | Marking | Designation | Connection size |
|---|---|---|---|
| 1 | Marking on connection (see figure above **3**) | Working connection for process valve (with integrated control pressure detection) | BG1 and BG2: **G1/8**<br>BG3: **G1/4** |
| 2 | (without marking) | Process valve spring chamber ventilation (single acting)/working connection 2 for process valve (only double acting) | BG1 and BG2: **G1/8**<br>BG3: **G1/4** |

The product comes with two pneumatic connections (for commercially available 6x4 mm pneumatic tubing) and a venting plug as standard. These are provided as follows:

| Control function of valve actuator | Connector 1 | Connector 2 |
|---|---|---|
| Single acting<br>(NO or NC)<br>(see figure at the top right) | Pneumatic connection | Venting plug* |
| Double acting | Pneumatic connection | Pneumatic connection |
| * With piped air outlet: Pneumatic connection. The venting plug is not suitable for IP 67 and is not recommended for damp ambient conditions. | | |

## Rotary design

Figure 1

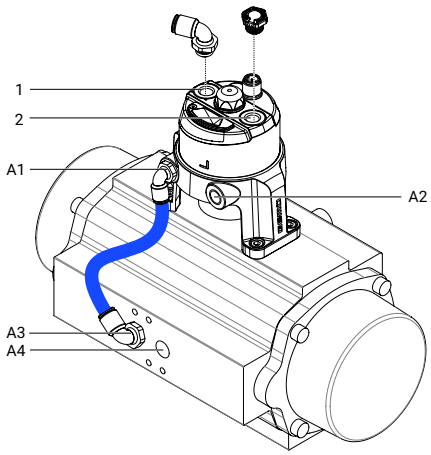


Figure 2, note: The figure shows the attachment options for single acting (NO or NC)

| Connection | Marking | Designation | Connection size |
|---|---|---|---|
| 1 | Marking on the connection | Working connection 1 (with integrated control pressure detection) | **G1/8** |
| 2 | (without marking) | Working connection 2 (only double acting) | **G1/8** |
| A1 | A1 | Working connection 1 from adapter to quarter turn actuator | **G1/8** |
| A2 | A2 | Working connection 2 from adapter to quarter turn actuator (only double acting) | **G1/8** |
| A3 | Dependent on the actuator | Dependent on the actuator | Dependent on the actuator |
| A4 | Dependent on the actuator | Dependent on the actuator | Dependent on the actuator |

The product comes with two pneumatic connections (for commercially available 6x4 mm pneumatic tubing) and a venting plug as standard. These are provided as follows:

| Control function of valve actuator | Connector 1 | Connector 2 | Connector A1 | Connector A2 | Connectors A3 and A4 |
|---|---|---|---|---|---|
| Single acting (NO or NC) (see figure 2) | Pneumatic connection | Venting plug* (connection not required) | Pneumatic connection | (connection not required) | A pneumatic connection appropriate for the actuator in question must be fitted on the system side (not included in the scope of delivery) |
| Double acting | Pneumatic connection | Pneumatic connection (not included in the scope of delivery) | Pneumatic connection | Pneumatic connection (not included in the scope of delivery) | A pneumatic connection appropriate for the actuator in question must be fitted on the system side (not included in the scope of delivery) |
| * With piped air outlet: Pneumatic connection. The venting plug is not suitable for IP 67 and is not recommended for damp ambient conditions. | | | | | |

Connectors 1, 2, A1 and A2 must be appropriately protected against the penetration of moisture. Unused connectors (for example, connectors 2 and A2 for single acting actuators) should be tightly sealed.

**Note:** The pneumatic connection can also be made directly with the quarter turn actuator only (A3 and A4). However, this means that the option to record the control pressure via the position indicator and to make internal device diagnoses based on the control pressure is lost. With this connection option, all connectors (1, 2, A1 and A2) must be sealed on the system side.

# Specific data relating to IO-Link

**Physics:** Physics 2 (3-wire design)

**Port configuration:** Type A port

**Transmission rate:** 38400 baud

**Min. cycle time:** 10 ms

**Vendor ID:** 401

**Device ID:** 1220610 (0x12A002)

**ISDU support:** Yes

**SIO operation:** Yes

**Block parameterization:** Yes

**IO-Link specification:** V1.1.4

**Information for IO-Link:** IODD files can be downloaded via https://ioddfinder.io-link.com/ or www.gemugroup.com.

# Process data

| Outputs (Master → Device) | | | |
|---|---|---|---|
| **Bit** | **Description** | **Default setting function** | **Logic** |
| 0 | Digital device input 1 | Deactivated | |
| 1 | Digital device input 2 | Deactivated | |
| 2 | Digital device input 3 | Initialization input | 0 = normal operation<br>1 = activate initialization |
| 3 | Digital device input 4 | Localization input | 0 = location function inactive<br>1 = activate location function |
| 4 | Digital device input 5 | Deactivated | |
| 5 | Digital device input 6 | Deactivated | |
| 6 | Digital device input 7 | Deactivated | |
| 7 | Digital device input 8 | Deactivated | |

| Device-side digital input signals can be used to start various actions, such as starting initialization/location function<br>The function can be set by the associated non-cyclical parameter data | | | |
|---|---|---|---|
| Digital device input 1 to 8 function | 0 | Deactivated | No function |
| | 3 | Initialization input | Initialization is activated if this signal is active. |
| | 4 | Localization input | The location function is activated if this signal is active. |

| Inputs (Device → Master) | | | |
|---|---|---|---|
| **Bit** | **Description** | **Default setting function** | **Logic** |
| 0 | Digital device output 1 | OPEN feedback | 0 = process valve not in OPEN position<br>1 = process valve in OPEN position |
| 1 | Digital device output 2 | CLOSED feedback | 0 = process valve not in CLOSED position<br>1 = process valve in CLOSED position |
| 2 | Digital device output 3 | Feedback for initialization active | 0 = normal operation<br>1 = initialization mode active |
| 3 | Digital device output 4 | Deactivated | |
| 4 | Digital device output 5 | Deactivated | |
| 5 | Digital device output 6 | Deactivated | |
| 6 | Digital device output 7 | Deactivated | |
| 7 | Digital device output 8 | Deactivated | |
| 8 to 23 | Analogue device output | Valve position feedback | 0.0 to 100.0% valve position |

| Device-side digital output signals can be used to output various statuses, such as end position feedback/errors/alarms.<br>→ The function can be set via the associated non-cyclical parameter data | | | |
|---|---|---|---|
| Digital device output 1 to 8 function | 0 | Deactivated | No function |
| | 1 | OPEN feedback | Feedback for valve position OPEN |
| | 2 | CLOSED feedback | Feedback for valve position CLOSED |
| | 3 | Error output | Output if an error is detected |
| | 4 | Warning output | Output if a warning is detected |
| | 5 | Feedback for initialization active | Feedback when initialization is active |

## IO-Link system commands

System commands can be transmitted via the subindex 0x0002. The following are supported by the device:

| Designation | System command | Description |
|---|---|---|
| Application Reset | 0x81 | Resets the technology-specific parameters. This allows the device to be brought into a pre-defined state without interrupting the corresponding communication and without the need for a switch-off cycle. |
| Back-to-Box | 0x83 | This function allows the device to be reset to the original parameterization. This command is useful if, for example, a device is removed from an existing plant and reactivated as a spare part. After the command has been executed, IO-Link communication is stopped until the next device start. |
| Reset Cycle Counter User | 0xA2 | Resets the user switching cycle counter. |

# Accessories

**GEMÜ 1219**

**Cable socket / cable plug M12**

GEMÜ 1219 is an M12, 5-pin connector (cable socket/cable plug). Straight and/or 90° angled plug type. Defined cable length or with threaded connection without cable. Various materials available for the threaded ring.

It is recommended that a straight connector is used for this product.

| Description | Length | Order number |
|---|---|---|
| 5-pin, straight | without cable | 88205544 |
| | 2 m cable | 88205542 |
| | 5 m cable | 88205543 |
| | 10 m cable | 88270972 |
| | 15 m cable | 88346791 |
| 5-pin, angle | without cable | 88205545 |
| | 2 m cable | 88205534 |
| | 5 m cable | 88205540 |
| | 10 m cable | 88210911 |
| | 15 m cable | 88244667 |

**GEMÜ 1560**

**IO-Link master**

The GEMÜ 1560 IO-Link master is used for parametrization, actuation, commissioning and for evaluating process and diagnostics data on products with IO-Link interface with communication standard in accordance with IEC 61131-9. The IO-Link master is available with USB port for use on a computer or with a Bluetooth or WLAN interface for use on mobile devices (iOS and Android). GEMÜ 1560 can be ordered separately or as a set for GEMÜ products including the required adapter.

| Description | Order designation | Order number |
|---|---|---|
| IO-Link master<br>kit (adapter plus cable) | 1560USBS 1 A40A12AU A | 99072365 |
| IO-Link master<br>kit (adapter plus cable) | 1560 BTS 1 A20A12AA A | 99130458 |

Subject to alteration | 10.2026 | 88898032

GEMÜ Gebr. Müller Apparatebau GmbH & Co. KG
Gert-Müller-Platz 1, 74635 Kupferzell, Germany
Phone +49 (0) 7940 1230 · info@gemue.de
www.gemu-group.com