GEMÜ 1242

Electrical position indicator



Features

- Fieldbus connection AS-Interface and DeviceNet (optional)
- Communication and programming interface IO-Link
- Adjustable switch point tolerances
- Speed^{-AP} function for fast mounting and initialization
- High visibility position indicator by LED
- On-site or remote end position programming via programming input

Description

The position indicator GEMÜ 1242 is suitable for mounting on pneumatically operated actuators. The position of the valve spindle is reliably electronically detected and evaluated using play-free and non-positive mounting. Intelligent microprocessor controlled functions facilitate commissioning and support during operation. The current position of the valve is displayed via high-visibility LEDs and fed back via electrical signals. The GEMÜ 1242 has been specially designed for valves with a stroke of 2 to 75 mm.

Technical specifications

- **Ambient temperature:** 0 to 60 °C
- **Linear measuring range:** 2 to 75 mm
- **Radial measuring range:** 0 to 90°
- **Supply voltages:** 24 V DC
- **Protection class :** IP 67
- **Electrical connection types:** M12 plug
- **Electrical interfaces:** AS-Interface I DeviceNet I IO-Link
- **Conformities:** ATEX I CSA I EAC I ETL Listed C US I FMEDA I IECEx I NEC 500

Technical data depends on the respective configuration

webcode: GW-1242

Product line

			
	GEMÜ 1240	**GEMÜ 1241**	**GEMÜ 1242**
Linear measuring range	5 Up to 75 mm	5 Up to 75 mm	2 Up to 75 mm
Radial measuring range	-	0 - 90°	0 - 90°
Ambient temperature	-20 Up to 60 °C	0 Up to 60 °C	0 Up to 60 °C
Optical position indicators			
High visibility LED	-	-	●
Mechanical	●	●	-
On-site LED	-	-	●
Electrical connection types			
Cable glands	●	●	-
Connectors	●	●	●
Switch types			
Microswitch	●	-	-
2-wire proximity switch (NAMUR)	●	●	-
3-wire proximity switch	●	-	-
Communication modes			
AS-Interface	-	-	●
DeviceNet	-	-	●
IO-Link	-	-	●
Without	●	●	-
Supply voltage			
24 V DC	●	-	●
250 V AC	●	-	-
8 V NAMUR	●	●	-
Conformities			
ATEX	-	●	●
CSA	-	-	●
EAC	-	-	●
ETL Listed C US	-	-	●
FMEDA	-	-	●
IECEx	-	●	●
NEC 500	-	-	●

Product description

Size 1, 50 mm

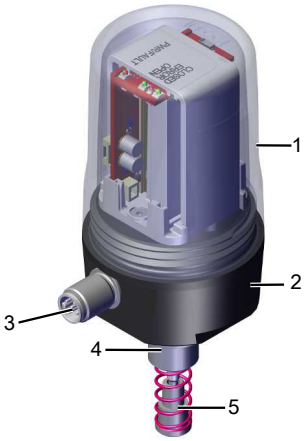

Size 2, 75 mm

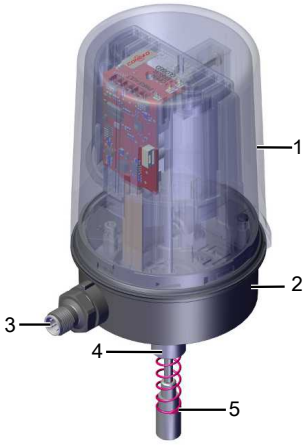

Item	Name	Materials	
		Size 1, 50 mm	Size 2, 75 mm
1	Housing cover – standard version:	PC	PC
2	Housing base	Anodized aluminium or SS	PPS
3	Electrical connection	Threaded piece: SS Insert: PA	Threaded piece: PPS or SS Insert: PA
4	Adapter piece	SS	SS
5	Mounting kit, valve-specific	Valve-specific materials	Valve-specific materials
	Seals	EPDM and NBR	NBR

Status LEDs

As well as the electrical position feedback and error analysis, a visual signal is emitted by LEDs that can be seen from above as well as a high visibility LED.

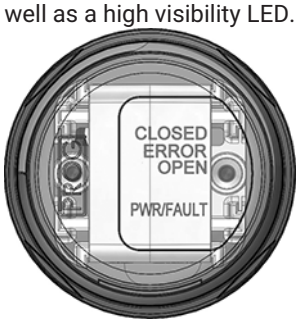

24 V / AS-Interface / IO-Link version

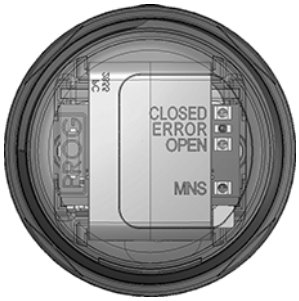

DeviceNet version

LED	Colour		Function
	Standard [1]	Inversed [2]	
CLOSED	Green	Orange	Process valve in CLOSED position
ERROR	Red	Red	Error
OPEN	Orange	Green	Process valve in OPEN position
High visibility LED	Green	Orange	Process valve in CLOSED position
	Orange	Green	Process valve in OPEN position
	Alternating green/orange	Alternating green/orange	Programming mode
	Flashes orange	Flashes orange	Error
PWR/FAULT (24 V version, code 000)	Green		Power on
	Red		Supply voltage too low
PWR/FAULT (ASi version, code A2, A3, A4)	Green		Communication active
	Red		Communication error/address 0
	Flashes red		Device error
PWR/FAULT (IO-Link version, code IOL)	Green		SIO operation
	Flashes green		Communication active
	Red		Communication error or supply voltage too low
MNS (DeviceNet version, code DN)	Flashes green		Ready for communication
	Green		Communication active
	Flashes red		Communication error
	Red		Communication error, device has disconnected independently from the bus

1) **Option**
Code 00: Without

2) **Option**
Code 40: Inversed LED feedback

For order codes see chapter "Order data"

[3] The flash codes of the PWR/FAULT LED are specified according to AS-Interface and provide feedback about the status of the AS-Interface communication.

[4] The flash codes of the MNS LEDs are specified according to DeviceNet and give feedback about the status of the DeviceNet communication.

GEMÜ CONEXO

The interaction of valve components that are equipped with RFID chips and an associated IT infrastructure actively increase process reliability.



Thanks to serialization, every valve and every relevant valve component such as the body, actuator or diaphragm, and even automation components, can be clearly traced and read using the CONEXO pen RFID reader. The CONEXO app, which can be installed on mobile devices, not only facilitates and improves the "installation qualification" process, but also makes the maintenance process much more transparent and easier to document. The app actively guides the maintenance technician through the maintenance schedule and directly provides him with all the information assigned to the valve, such as test reports, testing documentation and maintenance histories. The CONEXO portal acts as a central element, helping to collect, manage and process all data.

For further information on GEMÜ CONEXO please visit:
www.gemu-group.com/conexo

Ordering

GEMÜ Conexo must be ordered separately with the ordering option "CONEXO".

Installing the RFID chip (1)

Size 1, 50 mm



Size 2, 75 mm

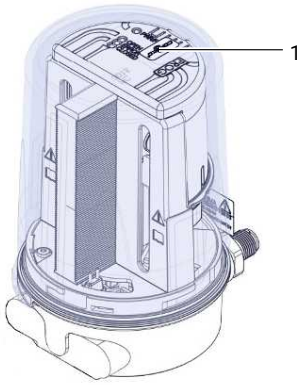

Availability

Option	Code	Size 1, 50 mm	Size 2, 75 mm
Housing material [1]	**01**	-	X
	07	X	-
	14	X	-
Electrical connection [2]	**01**	X	X
	02	X[3]	X[3]
Special version	**X**	X	-
	Y	X	-

1) **Housing material**
Code 01: PPS base, PC cover
Code 07: Stainless steel base, PC cover
Code 14: Aluminium base, PC cover

2) **Electrical connection**
Code 01: M12 plug, 5-pin
Code 02: M12 plug, 8-pin

[3] For 24 V / IO-Link (code 000) only

Overview of available functions

Function	Version				
	24 V / IO-Link	AS-Interface			DeviceNet
		A2	A3	A4	
Optical high visibility position indicator	X	X	X	X	X
Deactivation high visibility position indicator	X	-	-	X	X
On-site programming	X	X	X	X	X
Deactivation of on-site programming	X	-	-	X	X
Position feedback Open	X	X	X	X	X
Position feedback Closed	X	X	X	X	X
Feedback for operating mode	X	X	X	X	X
Location function	X	-	-	X	X
Inversion of LED colours	X	-	-	X	X
Inversion of feedback signals	X	-	-	X	X
Switch point setting (tolerance)	X	X	X	X	X
Setting stroke reduction alarm	X	-	-	-	X
Feedback stroke reduction alarm	X	-	-	X	X
Feedback programmed positions	X	-	-	-	X
Feedback current positions	X	-	-	-	X
Feedback internal error	X	X	X	X	X
Feedback sensor error	X	X	X	X	X
Feedback programming error	X	X	X	X	X
Feedback over-temperature	X	-	-	-	-
Counter Powerfail	X	-	-	-	-
Counter Power on	X	-	-	-	-
Programming counter	X	-	-	-	-
Counter programming error	X	-	-	-	-
Counter sensor error	X	-	-	-	
Counter over-temperature	X	-	-	-	-
Cycle counter (on-site)	X	-	-	-	X
Total cycle counter	X	-	-	-	X
Default	X	-	-	-	Via DeviceNet

Order data

The order data provide an overview of standard configurations.

Please check the availability before ordering. Other configurations available on request.

Note: A valve specific mounting kit is required for assembly. For designing the mounting kit, the valve type, nominal size, control function and actuator size must be stated.

Order codes

1 Type	Code
Electrical position indicator	1242

2 Fieldbus	Code
Without, 24 V version, with IO-Link	000
AS-Interface, 31 Slaves, 4E/4A	A2
AS-Interface, 62 Slaves, 4E/3A	A3
AS-Interface, 62 slaves, 8I/8O	A4
DeviceNet	DN

3 Accessory	Code
Accessories	Z

4 Housing material	Code
PPS base, PC cover	01
Stainless steel base, PC cover	07
Aluminium base, PC cover	14

5 Function	Code
Position feedback Open / Closed	00

6 Electrical connection	Code
M12 plug, 5-pin	01

6 Electrical connection	Code
M12 plug, 8-pin	02

7 Option	Code
Without	00
Inversed LED feedback	40

8 Switch	Code
Electronics	E0

9 Connection diagram	Code
M12 plug, 5-pin	01
M12 plug, 8-pin	02

10 Travel length	Code
Potentiometer, 50 mm length	050
Potentiometer, 75 mm length	075

11 Special version	Code
Without	
NEC 500 and UL/CSA approval	Y
ATEX (2014/34/EU), IECEx	X

Order example

Ordering option	Code	Description
1 Type	1242	Electrical position indicator
2 Fieldbus	000	Without, 24 V version, with IO-Link
3 Accessory	Z	Accessories
4 Housing material	14	Aluminium base, PC cover
5 Function	00	Position feedback Open / Closed
6 Electrical connection	01	M12 plug, 5-pin
7 Option	00	Without
8 Switch	E0	Electronics
9 Connection diagram	01	M12 plug, 5-pin
10 Travel length	050	Potentiometer, 50 mm length
11 Special version		Without

Technical data

Temperature

Ambient temperature:

Standard or with special version code Y	0–60 °C
Special version code X	0–55 °C

Storage temperature: -10 — 70 °C

Product compliance

EMC Directive: 2014/30/EU

Technical standards used:

24 V	
Interference emission	EN 61000-6-3
Interference resistance	EN 61000-6-2

IO-Link	
Interference emission	EN 61000-6-3
Interference resistance	EN 61000-6-2

AS-Interface	
Interference emission	In accordance with AS-Interface Spec. 3.0
Interference resistance	In accordance with AS-Interface Spec. 3.0
Interference emission/ interference resistance	EN 62026-2:2013 + A1:2019

DeviceNet	
Interference emission	EN 61000-6-3
Interference resistance	EN 61000-6-2

Explosion protection: ATEX (2014/34/EU) and IECEx, order code Special version X
NEC 500 (ISA 12.12.01), order code Special version Y

ATEX marking: Gas: Ⓔx II 3G Ex ec nC IIC T4 Gc X
Dust: Ⓔx II 3D Ex tc IIIC T80°C Dc X

IECEx marking: Gas: Ⓔx Ex ec nC IIC T4 Gc
Dust: Ⓔx Ex tc IIIC T80°C Dc
Certificate: IECEx IBE 18.0029 X

NEC marking: Class I, Division II, Groups C & D, T4

Approvals:

	24 V	AS-Interface	IO-Link	DeviceNet
Fieldbus/ communication	-	Travel sensor version 050: AS-Interface certificate no. 125602 Travel sensor version 075: AS-Interface certificate no. 125602	Travel sensor version 050: IO-Link specification V 1.1 Travel sensor version 075: IO-Link specification V 1.1	n.n.

FMEDA:

Product description:	GEMÜ electrical position indicator 1242
Device type:	B
Valid software version:	V1.1.X.X
Fail-safe function:	The fail-safe state is defined as a High (24 V DC) signal at pin 4 (device version 24 V IO-Link), if the current position of the integrated travel sensor is smaller than the switch point CLOSED (default setting 12%).
HFT (Hardware Fault Tolerance):	0

Further information, see safety manual

Mechanical data

Installation position: Optional

Weight:

Size 1	Size 2
Aluminium: 320 g Stainless steel: 600 g	420 g

Protection class: IP 67

IP NEMA 4X (UL 61010-1, UL 50E), only available as special version code Y

Travel sensor:

	Size 1	Size 2
Minimum stroke:	2 mm	5 mm
Maximum stroke:	46 mm	75 mm
Hysteresis:	0.2 mm	0.5 mm
Accuracy:	0.2% Full Scale	

Electrical data

Electrical connection type: 1 x 5-pin M12 plug (A-coded) *

* The number of pins may vary depending on the fieldbus version (see chapter "Electrical connection").

1 x 8-pin M12 plug (A-coded)

Supply voltage: 24 V DC (18 to 30 V DC) (according to IO-Link specifications)

26.5 to 31.6 V DC (according to AS-Interface specifications)

11 to 25 V DC (according to DeviceNet specifications)

Current consumption:

24 V / IO-Link	AS-Interface	DeviceNet
typically 40 mA	typically 50 mA	typically 30 mA

Duty cycle: Continuous duty

Electrical protection class: III

Reverse polarity protection: yes

Line fuse: 630 mA medium time lag, for order code Fieldbus 000

Switching characteristic:

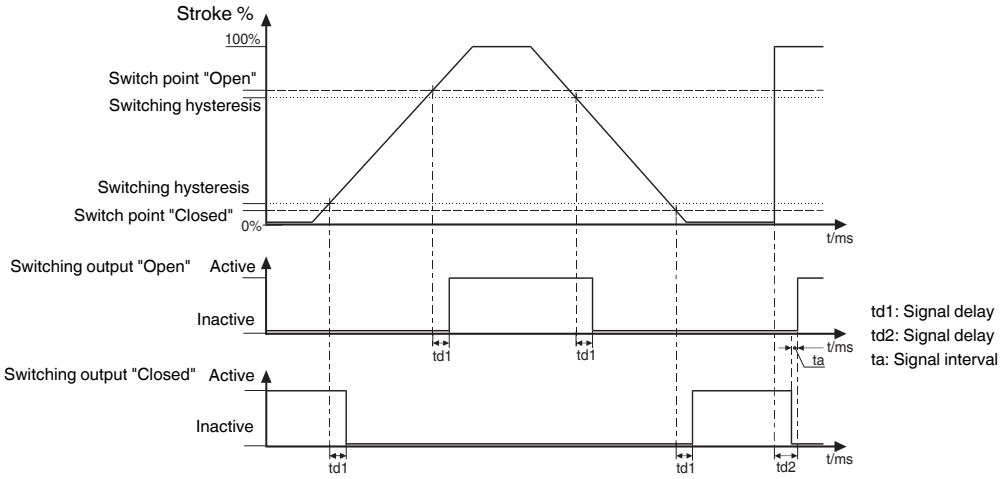

Switch points: 24 V, IO-Link, AS-Interface, DeviceNet: The data in percent refer to the programmed stroke, before each end position

Switch points: ASi-5: The data in percent refers to the programmed stroke, with reference to the lower end position (0%)

Switch points:

	Size 1	Size 2
Default setting switch point CLOSED	12%	12%
Default setting switch point OPEN	25%	25%
Min. switch point CLOSED	0.8 mm	2 mm
Min. switch point OPEN	0.5 mm	1.25 mm

If the percentage switch points dependent on the programmed stroke are smaller than the permissible min. switch points, the min. switch points apply automatically.

Dimensions

Size 1

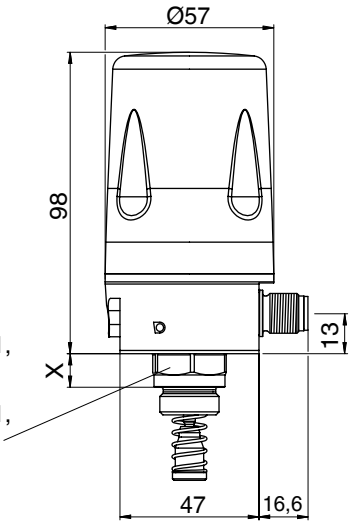

WAF 20 for mounting kit M12x1,
x = 9 mm
WAF 24 for mounting kit M16x1,
x = 11 mm
dependent on valve used

Dimensions in mm

Size 2

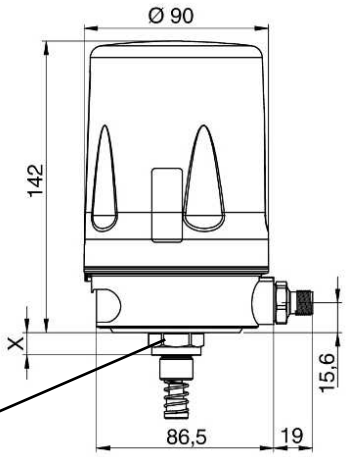

WAF 20 for mounting kit M12x1,
x = 9 mm
WAF 24 for mounting kit M16x1,
x = 11 mm
depending on the valve that is used
Dimensions in mm

Electrical connection

24 V / IO-Link, ordering option Fieldbus code 000, electrical connection code 01

Pin assignment

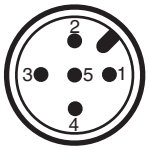

Pin	Signal name
1	Uv, 24 V DC, supply voltage
2	24 V DC, open end position output
3	U, GND
4	24 V DC, closed end position output, C/Q IO-Link
5	24 V DC, programming input

Pin 5 is highly active. If not used, connect to GND or leave open.

Inputs (pin 5)

Input impedance: Min. 27 kΩ

Input voltage: max. 30 V DC

High level: ≥ 18 V DC

Low level: ≤ 5 V DC

Outputs (pin 2, 4)

Internal wiring:

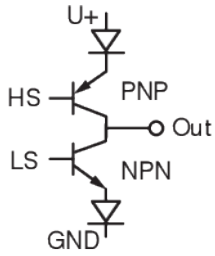

Push-Pull

Max. switching current: ± 100 mA

Max. voltage drop Vdrop: 3 V DC at 100 mA

Switching voltage: $+U_v - V_{drop}$ push high
$-U_v + V_{drop}$ pull low

24 V / IO-Link, ordering option Fieldbus code 000, electrical connection code 02

Pin assignment

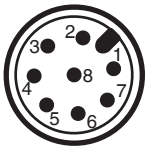

Pin	Signal name
1	Uv, 24 V DC, supply voltage
2	24 V DC, open end position output
3	U, GND
4	24 V DC, closed end position output
5	24 V DC, programming input
6	n.c.
7	24 V DC, error output
8	n.c.

Pin 5 is highly active. If not used, connect to GND or leave open.
The following errors are indicated via pin 7 (error output): Sensor error, pneumatic error, programming error, internal error

Inputs (pin 5)

Input impedance: Min. 27 kΩ

Input voltage: max. 30 V DC

High level: ≥ 18 V DC

Low level: ≤ 5 V DC

Outputs (pin 2, 4)

Internal wiring:

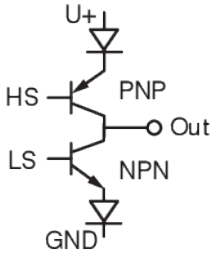

Push-Pull

Max. switching current: ± 100 mA

Max. voltage drop Vdrop: 3 V DC at 100 mA

Switching voltage: $+U_v - V_{drop}$ push high
$-U_v + V_{drop}$ pull low

AS-Interface, ordering option Fieldbus, code A2, A3, A4

Pin assignment

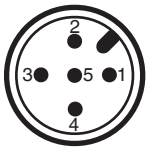

Pin	Signal name
1	AS-Interface +
2	n.c.*
3	AS-Interface -
4	n.c.*
5	n.c.*

* Pins 2, 4 and 5 are not relevant for the function and may therefore be populated (visible) or not populated (not present).

Ensure a potential equalization connection for AS-Interface (3.0). Implement the potential equalization either via a pre-assembled earthing kit or ensure that there is a sufficiently conductive connection (R ≤ 100 Ω) to the system earth via the mechanically connected valve fitting.

Potential equalization is not required for housing versions with a PPS base
(except for special functions X and Y).

DeviceNet, ordering option Fieldbus, code DN

Pin assignment

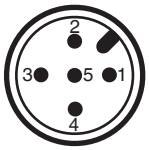

Pin	Signal name
1	Shield
2	V+
3	V-
4	CAN_H
5	CAN_L

Specific data – IO-Link

Physics: Physics 2 (3-wire design)

Port configuration: Port type A

Transmission rate: 38400 baud

Frame type in Operate: 2.5

Min. cycle time: 2.3 ms

Vendor-ID: 401

Device-ID: 124201

Product-ID: 1242 IO-LINK

ISDU support: yes

SIO operation: yes

IO-Link specification: V1.1

Information for IO-Link: IODD files can be downloaded via https://ioddfinder.io-link.com/ or www.gemu-group.com.

Process data

Device → Master

Name	Bit	Values
Valve position Open	0	0 → Process valve not in Open position
		1 → Process valve in Open position
Valve position Closed	1	0 → Process valve not in Closed position
		1 → Process valve in Closed position
Programming mode	2	0 → Normal operation
		1 → Programming mode

Master → Device

Name	Bit	Values
Programming mode	1	0 → Normal operation
		1 → Programming mode
Locate	2	0 → Off
		1 → On

Parameter overview

NOTICE

All IO-Link parameters that contain sub-indexes can also be addressed in bundles via sub-index 0.

Index [Hex]	Sub-index	Access rights	Parameters	Length	Data type	Default settings	Setting options
0x10	0	ro	Vendor Name	6 bytes	StringT	GEMUE	-
0x12	0	ro	Product Name	13 bytes	StringT	4242 IO-Link	-
0x13	0	ro	Product ID	8 bytes	StringT	4242 IO-LINK	-
0x15	0	ro	Serial number	9 bytes	StringT	0 – 4294967296	-
0x16	0	ro	Hardware Revision	8 bytes	StringT	Rev. xx	-
0x17	0	ro	Firmware Revision	10 bytes	StringT	V x.x.x.x	-
0x50	1	rw	Inversion of LED colours	1 bit	Boolean	0	0 = Standard 1 = Inversed
	2	rw	Inversion of feedback signals	1 bit	Boolean	0	0 = Standard 1 = Inversed
	3	rw	Function of high visibility	3 bit	UIntegerT	3	0 = off 1 = open/closed (33%) 2 = open/closed (66%) 3 = open/closed (100%)
	4	rw	Programming mode	1 bit	Boolean	0	0 = automatic 1 = manual
	5	rw	On-site programming	1 bit	Boolean	0	0 = enabled 1 = disabled
	6	rw	Inversion of outputs	1 bit	Boolean	0	0 = standard 1 = inversed
0x51	1	rw	Switch Point OPEN request	8 bit	UIntegerT	25%	3%–97%
	2	rw	Switch Point CLOSED request	8 bit	UIntegerT	12%	3%–97%
	3	ro	Switch Point OPEN real	8 bit	UIntegerT	25%	Display of values 3%–97%
	4	ro	Switch Point CLOSED real	8 bit	UIntegerT	12%	Display of values 3%–97%
0x52	1	rw	Alarm Stroke reduction OPEN	4 bit	UIntegerT	1	0 = disabled 1 = 25% of Switch Point 2 = 50% of Switch Point 3 = 75% of Switch Point
	2	rw	Alarm Stroke reduction CLOSED	4 bit	UIntegerT	1	0 = disabled 1 = 25% of Switch Point 2 = 50% of Switch Point 3 = 75% of Switch Point
	3	rw	Alarm opening time	8 bit	UIntegerT	0	0 = disabled 1–255 s
	4	rw	Alarm closing time	8 bit	UIntegerT	0	0 = disabled 1–255 s

Index [Hex]	Su-bindex	Access rights	Parameters	Length	Data type	Default settings	Setting options
	5	rw	Valve type	8 bit	UIntegerT	0	0 = unknown 1 = normally closed 2 = normally open
0x53	1	ro	Programmed position OPEN	16 bit	UIntegerT	0	Display of numerical values 0–4092
	2	ro	Programmed position CLOSED	16 bit	UIntegerT	0	
	3	ro	Programmed position STROKE	16 bit	UIntegerT	0	
0x54	1	ro	Last position OPEN	16 bit	UIntegerT	0	
	2	ro	Last position CLOSED	16 bit	UIntegerT	0	
	3	ro	Last position STROKE	16 bit	UIntegerT	0	
0x56	1	rw	Valve cycles user	24 bit	UIntegerT	0	Can be reset to 0, display of numerical values 0–16777215
	2	ro	Valve cycles total	24 bit	UIntegerT	0	Display of numerical values 0–16777215
0x57	1	ro	Counter Powerfail	16 bit	UIntegerT	0	Display of numerical values 0–65535
	2	ro	Counter Power on	16 bit	UIntegerT	0	
	3	ro	Counter Programming	16 bit	UIntegerT	0	
	4	ro	Counter Sensor calibration	16 bit	UIntegerT	0	
	5	ro	Counter Prog error no stroke	16 bit	UIntegerT	0	
	6	ro	Counter Prog error less stroke	16 bit	UIntegerT	0	
	7	ro	Counter Prog error after sensor error	16 bit	UIntegerT	0	
	11	ro	Counter Sensor error OPEN	16 bit	UIntegerT	0	
	12	ro	Counter Sensor error CLOSED	16 bit	UIntegerT	0	
	16	ro	Counter Over temperature	16 bit	UIntegerT	0	
0x60	0	ro	Actual AD-value	16 bit	UIntegerT	0	Display of numerical values 0–4092

Events

Meaning	Value	Type	Mode
Internal error	0x8CA2	Error	Appear / Disappear
Sensor error in position OPEN	0x8CA4	Error	Appear / Disappear
Sensor error in position CLOSED	0x8CA5	Error	Appear / Disappear
Programming error with no stroke	0x8CA6	Error	Appear / Disappear
Programming error with to less stroke	0x8CA7	Error	Appear / Disappear
Programming error after sensor error	0x8CA8	Error	Appear / Disappear
Not calibrated	0x8CA9	Error	Appear / Disappear
Stroke reduction OPEN	0x8CB5	Warning	Appear / Disappear
Stroke reduction CLOSED	0x8CB6	Warning	Appear / Disappear
Parameter value out of Range	0x8DE0	Notification	Single Shot
Parameter value changed	0x8DE1	Notification	Single Shot

Specific data - AS-Interface

	A2 version	A3 version	A4 version
AS-Interface specification	3.0; max. 31 slaves	3.0; max. 62 slaves	3.0; max. 62 slaves
AS-Interface profile	S 7.F.E (4I/4O)	S 7.A.E (4I/3O)	S 7.A.A (8I/8O)
I/O configuration	7	7	7
ID code	F	A	A
ID2 code	E	E	A
AS-Interface approval	Size 1: AS-Interface certificate no. 96002		

Inputs

Bit		Default	Function	Version			Logic
				A2	A3	A4	
DI0	0	Indication of OPEN position		X	X	X	0 = process valve not in OPEN position 1 = process valve in OPEN position
DI1	0	Indication of CLOSED position		X	X	X	0 = process valve not in CLOSED position 1 = process valve in CLOSED position
DI2	0	Indication of operating mode		X	X	X	0 = normal operation 1 = programming mode
DI3	0	Error 2		X	X	X	see error analysis
DI4	0	Error 3		-	-	X	
DI5	0	Error 4		-	-	X	
DI6, DI7	not used			-	-	X	
PF	0	Error 1		X	X	X	see error analysis

Outputs

Bit	Default	Function	Version			Logic
			A2	A3	A4	
DO0, DO1	not used		X	X	X	
DO2	0	Setting slave in programming mode	X	X	X	0 = normal operation 1 = programming mode
DO3	0	Programming mode	X	-	-	0 = manual programming 1 = automatic programming
	0	Function of high visibility position indicator	-	-	X	0 = activated 1 = deactivated
DO4	0	Inversion of feedback signals	-	-	X	0 = standard 1 = inversed
DO5	0	Inversion of LED colours	-	-	X	0 = standard 1 = inversed
DO6	0	Location function	-	-	X	0 = deactivated 1 = activated
DO7	0	On-site programming	-	-	X	0 = enabled 1 = disabled

Specific data - DeviceNet

General data

Communication modes: Function, Polling, Change of state, Cyclic, Bit strobe

Identity				
Class	Inst.	Attr.	Function	Value
1h	1h	1h	Vendor ID	869
		2h	Product Type	43
		3h	Product Code	1242
		4h	Rev.	2.2 [1)]
		5h	Status	Device status according to DeviceNet specifications
		6h	Series No.	Continuous serial number

Identity				
Class	Inst.	Attr.	Function	Value
		7h	Name	1242 DN position indicator

1) Use EDS file in accordance with revision status of the device

Note: Download EDS files from www.gemu-group.com

Net topology - DeviceNet system

To avoid malfunction the trunk cable is fitted with resistors on both sides. The drop cables do not require bus ends.

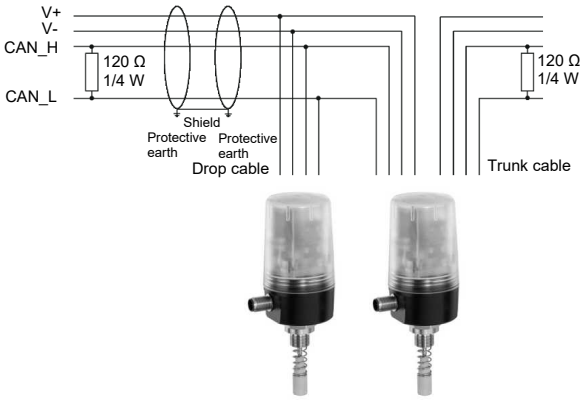

Maximum cable length

Baud rate [kBaud]	Trunk cable		Drop cable	
	Thick cable	Thin cable	Max. cable length per drop cable	Max. drop cable accumulated length
125	500 m	100 m	6 m	156 m
250	250 m	100 m	6 m	78 m
500	100 m	100 m	6 m	39 m

Inputs

Bit	Default	Designation	Function	Logic
0, 1	not used			
2	0	Programmingmode	Operating mode	0 = normal operation 1 = programming mode
3	0	Position Closed	CLOSED position	0 = process valve not in CLOSED position 1 = process valve in CLOSED position
4	0	Position Open	OPEN position	0 = process valve not in OPEN position 1 = process valve in OPEN position
5	0	Calibrationmode	Calibration mode	0 = normal operation 1 = calibration mode
6	0	Global warnings	Warning	0 = warning not active 1 = warning active
7	0	Global errors	Error	0 = error not active 1 = error active

As seen from the DeviceNet master, Class 64h, Inst. 1h, Attr. 1h

Outputs

Bit	Default	Designation	Function	Logic
0 … 2	not used			

Bit	Default	Designation	Function	Logic
3	0	Location function	Location function	0 = location function not active 1 = location function active
4	not used			
5	0	Manual programming	Manual programming mode	0 = manual programming mode not active 1 = manual programming mode active
6	0	Automatic programming	Automatic programming mode:	0 = automatic programming mode not active 1 = automatic programming mode active
7	not used			

As seen from the DeviceNet master, Class 64h, Inst. 1h, Attr. 1h

Parameter overview

Class	Inst.	Attr.	Parameters	Length	Data type	Access	Standard value	Value range
Fh	1h	1h	Inversion of LED colours	1 byte	Boolean	Get/Set	0	0 = standard 1 = inversed
Fh	2h	1h	Inversion of signals	1 byte	Boolean	Get/Set	0	0 = standard 1 = inversed
Fh	3h	1h	Function of high visibility	1 byte	USINT	Get/Set	3	0 = OFF 1 = 33% 2 = 66% 3 = 100% 4 = Closed 100%; Open OFF 5 = Closed OFF; Open 100%
Fh	4h	1h	On-site programming	1 byte	Boolean	Get/Set	0	0 = enabled 1 = disabled
Fh	5h	1h	Switch Point OPEN request	1 byte	USINT	Get/Set	25	3%–97%
Fh	6h	1h	Switch Point OPEN real	1 byte	USINT	Get	0	Display of values 0%–100%
Fh	7h	1h	Switch Point CLOSED request	1 byte	USINT	Get/Set	12	3%–97%
Fh	8h	1h	Switch Point CLOSED real	1 byte	USINT	Get	0	Display of values 0%–100%
Fh	9h	1h	Alarm stroke reduction OPEN	1 byte	USINT	Get/Set	1	0 = disabled 1 = 25% 2 = 50% 3 = 75%
Fh	Ah	1h	Alarm stroke reduction CLOSED	1 byte	USINT	Get/Set	1	0 = disabled 1 = 25% 2 = 50% 3 = 75%
Fh	Bh	1h	Alarm opening time	1 byte	USINT	Get/Set	0	0–255 (0 = off)
Fh	Ch	1h	Alarm closing time	1 byte	USINT	Get/Set	0	0–255 (0 = off)
Fh	Fh	1h	Programmed position OPEN	2 bytes	UINT	Get	0	Display of numerical values 0–4092
Fh	10h	1h	Programmed position CLOSED	2 bytes	UINT	Get	0	Display of numerical values 0–4092
Fh	11h	1h	Programmed stroke	2 bytes	UINT	Get	0	Display of numerical values 0–4092

Class	Inst.	Attr.	Parameters	Length	Data type	Access	Stand-ard value	Value range
Fh	12h	1h	Last position OPEN	2 bytes	UINT	Get	0	Display of numerical values 0–4092
Fh	13h	1h	Last position CLOSED	2 bytes	UINT	Get	0	Display of numerical values 0–4092
Fh	14h	1h	Last stroke	2 bytes	UINT	Get	0	Display of numerical values 0–4092
Fh	15h	1h	Valve position	2 bytes	UINT	Get	0	Display of numerical values 0–4092
Fh	16h	1h	Sensor error	1 byte	USINT	Get	0	0 = Sensor OK 1 = Sensor error position closed 2 = Sensor error position open
Fh	17h	1h	Programming error	1 byte	USINT	Get	1	0 = Programming OK 1 = Not calibrated 2 = No stroke 3 = Stroke < min. stroke 4 = Sensor error position closed 5 = Sensor error position open 6 = Sensor error position closed + open
Fh	19h	1h	Internal error	1 byte	USINT	Get	0	0 = Device OK 1 = Invalid crc check 2 = Invalid serial number 3 = Memory error
Fh	1Ah	1h	Stroke reduction warning	1 byte	USINT	Get	0	0 = Stroke OK 1 = Stroke reduction position closed 2 = Stroke reduction position open 3 = Stroke reduction position closed + open
Fh	1Bh	1h	Valve cycles user	4 bytes	UDINT	Get/Set	0	Can be reset to 0, display of numerical values 0–429496729
Fh	1Ch	1h	Valve cycles total	4 bytes	UDINT	Get	0	Display of numerical values 0–429496729

Accessories



GEMÜ 4242000ZMA

Programming magnet

The programming magnet is used to start automatic initialization.

Order number: 88377537



GEMÜ 1219

Cable socket / cable plug M12

The GEMÜ 1219 is a connector (cable socket / cable plug) M12, 5-pin. Straight and/or 90° angled plug type. Defined cable length or with threaded connection without cable. Various materials available for the threaded ring.

Description	Length	Order number
5-pin, angle	without cable	88205545
	2 m cable	88205534
	5 m cable	88205540
	10 m cable	88210911
	15 m cable	88244667
5-pin, straight	without cable	88205544
	2 m cable	88205542
	5 m cable	88205543
	10 m cable	88270972
	15 m cable	88346791
8-pin, angle	5 m cable	88374574
8-pin, straight	without cable	88304829



GEMÜ 4180

AS-Interface connector

AS-Interface connector (M12 on AS-Interface, flat cable)

Order number: 88073531



GEMÜ 1560

IO-Link master

The GEMÜ 1560 IO-Link master is used for parametrization, actuation, commissioning and for evaluating process and diagnostics data on products with IO-Link interface with communication standard in accordance with IEC 61131-9. The IO-Link master is available with USB port for use on a computer or with a Bluetooth or WLAN interface for use on mobile devices (iOS and Android). GEMÜ 1560 can be ordered separately or as a set for GEMÜ products including the required adapter.

Description	Order designation	Order number
IO-Link master kit (adapter plus cable)	1560USBS 1 A40A12AU A	99072365
IO-Link master kit (adapter plus cable)	1560 BTS 1 A20A12AA A	99130458



Subject to alteration | 10.2026 | 88469714

GEMÜ Gebr. Müller Apparatebau GmbH & Co. KG
Gert-Müller-Platz 1, 74635 Kupferzell, Germany
Phone +49 (0) 7940 1230 · info@gemue.de
www.gemu-group.com