GEMÜ LSC

Limit switch box for quarter turn actuators



Features

- Adjustable switch point tolerances
- Simple mounting and retrofitting to quarter turn actuators
- Can be attached to all quarter turn valves in accordance with the VDI/VDE 3845 standard interface
- Up to four position feedback messages
- Compact, solid housing
- Solenoid valve connection (optional)
- 3D optical position indicator (optional)
- Open/Closed LED display (optional)
- Low temperatures to -40 °C (optional)

Description

The GEMÜ LSC limit switch box is suitable for mounting to manually and pneumatically operated quarter turn valves. It is also fitted with an optical position indicator for visual confirmation of position.

Technical specifications

- **Ambient temperature:** -25 to 80 °C
- **Radial measuring range:** 0 to 90°
- **Supply voltages:** 5–250 V AC/DC
- **Protection class :** IP66. IP67
- **Electrical connection types:** Plug, Harting I Plug, Hirschmann I M20 cable gland I M12 plug I NPT threaded connection
- **Switch types:** Reed contact I Microswitch I 2-wire proximity switch (NAMUR) I 3-wire proximity switch
- **Conformities:** FMEDA I IECEx I EAC I ATEX

Technical data depends on the respective configuration

webcode: GW-LSC

Product description



Item	Name	Materials
1	Housing cover	PC or Vestamid (ATEX version)
2	Housing base	PA6 or Vestamid (ATEX version)
3	Mounting kit	Code KK = PA6 Code KE, AE = Stainless steel 1.4305
4	Tower optical position indicator (option code 4D)	PC and PA6
	Seals	EPDM, NBR

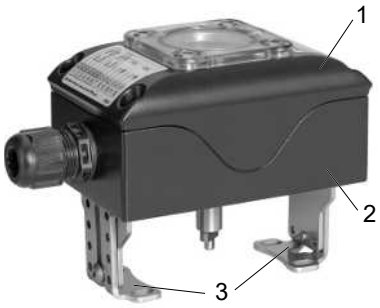

Item	Name	Materials
1	Housing cover	Aluminium
2	Housing base	Aluminium
3	Mounting kit	Stainless steel 1.4305
	Seals	EPDM, NBR

Order data

The order data provide an overview of standard configurations.

Please check the availability before ordering. Other configurations available on request.

Products ordered with **bold marked ordering options** are so-called preferred series.

Order codes

1 Type	Code
Limit switch box for quarter turn valves	LSC

2 Switch	Code
Changeover contact, microswitch, 0.1 A (250 V AC), 0.1 A (24 V DC) Honeywell, V15H10-SPDT, gold contacts	104
Changeover contact, microswitch, 10 A (250 V AC), 2.5 A (24 V DC) ZF, D44X-SPDT	**105**
Changeover contact, microswitch, Gold: 0.1 A (250 V AC), 0.1 A (24 V DC) Silver: 10 A (250 V AC), 2.5 A (24 V DC) CROUZET, 83161.8-SPDT	108
Changeover contact, microswitch, 10 A (250 V AC), 2.5 A (24 V DC), DPDT ZF, D44X-DPDT	109
Changeover contact, microswitch, ATEX ia 30 V DC, 52 mA, SPST NO Honeywell, V15H10, gold-plated contacts	110
Changeover contact, microswitch, Gold: 0.1 A (250 V AC), 0.1 A (24 V DC) Silver: 10 A (250 V AC), 2.5 A (24 V DC) CROUZET, 83161.8-DPDT, gold contacts	111
Changeover contact, microswitch, ATEX de,t Ue: 250 V, Ie: 4 A AC, 400 mA DC Bartec, 07-1511-1030	120
Changeover contact, microswitch, ATEX de,t Ue: 30 V, Ie: 400 mA AC/DC Bartec, 07-1511-3530	121
Changeover contact, microswitch, ATEX de,t Ue: 250 V Ie: 4 A AC, 150 mA DC, Crouzet, 831391-SPDT	122
Proximity switch, 2-wire, NAMUR, ATEX ia IFM, NS5002	**205**
Proximity switch, 2-wire, break contact/make contact, PNP/NPN, 5–36 V DC IFM, IS5026	207
Proximity switch, 2-wire, NAMUR, ATEX ia P+F, SJ 3.5 N	208
Proximity switch, 2-wire, NAMUR, ATEX ia P+F, NJ2-V3-N	209
Proximity switch, 2-wire, NAMUR, ATEX ia P+F, SJ 3.5 SN	211
Proximity switch, 2-wire, NAMUR, ATEX ia P+F, NJ2-12GK-SN	212
Proximity switch, 2-wire, make contact, 5–60 V DC P+F, NBB3-V3-Z4	213
Proximity switch, 2-wire, NAMUR, ATEX ia P+F, NJ3-18GK-S1N	214
Proximity switch, 2-wire, make contact, 20–250 V AC Turck, BI2-Q10S-AZ31X	220

2 Switch	Code
Proximity switch, 2-wire, make contact, 3.7–30 V DC P+F, NBB2-V3-Z4L	222
Proximity switch, 3-wire, make contact, PNP, 10–30 V DC IFM, IS5001	**305**
Proximity switch, 3-wire, make contact, PNP, 10–30 V DC P+F, NBB2-V3-E2	306
Proximity switch, 3-wire, make contact, NPN, 10–36 V DC IFM, IS5003	320
Proximity switch, 3-wire, dual make contact, PNP, 10–30 V DC, ATEX tb, tc IFM, IN511A	322
Reed sensor, 3-wire, SPDT-CO (form C), 30 V AC/DC, ZF, MP200703	R01

3 Accessory	Code
Accessories	Z

4 Housing/mounting kit material	Code
Plastic housing Plastic mounting kit	**KK**
Plastic housing Stainless steel mounting kit	KE
Aluminium housing Stainless steel mounting kit	AE
Plastic housing for manually operated ball valves	KM

5 Electrical connection	Code
M12 plug, 5-pin	1112
M12 plug, 8-pin M20 x 1.5 for 1 solenoid valve connection with 500 mm cable	12 MA
M20 x 1.5 cable gland, plastic	**3101**
M20 x 1.5 cable gland, stainless steel	3107
M20 x 1.5 cable gland, nickel-plated brass	3112
M20 x 1.5 cable gland, plastic M20 x 1.5 for 1 solenoid valve connection with 500 mm cable	31MA
M20 x 1.5 cable gland, plastic M20 x 1.5 for 2 solenoid valve connections with 500 mm cable	31MB
NPT ½ threaded connection	3201
2 x NPT ½ threaded connection	32MN
Hirschmann plug N6RAM	HM6R
Harting plug: HS25199 Housing: Han 3A-EG-QB-M20 Pin: Han 7D-STI-C Crimp contact: R 15-STI-C-1 QMM (AU)	HM7D

5 Electrical connection	Code
Harting plug: PE-HSM20-8PM Housing: Han 3M-eg-QB-M20 Pin: Han 8D-M Crimp contact: R 15-STI-C-1.5 QMM	HM8D

6 Option	Code
Without	**00**
3D display with pressure compensating element for outdoor use	3A
3D display	3D
3D display for L-port	3L
Large OCT position display Open-closed tower	4D
Pressure compensating element for outdoor use	DA
Extended ambient temperature -25 °C to +120 °C	HT
LED display for OPEN/CLOSE max. 24 V DC	LD
Extended ambient temperature -40 °C.....	NT

7 Approval	Code
SIL 1–3 (IEC 61508:2010)	S

8 Approval	Code
Without	
ATEX (2014/34/EU), IECEx	X

Order example

Ordering option	Code	Description
1 Type	LSC	Limit switch box for quarter turn valves
2 Switch	105	Changeover contact, microswitch, 10 A (250 V AC), 2.5 A (24 V DC) ZF, D44X-SPDT
3 Accessory	Z	Accessories
4 Housing/mounting kit material	KK	Plastic housing Plastic mounting kit
5 Electrical connection	3101	M20 x 1.5 cable gland, plastic
6 Option	00	Without
7 SIL	S	SIL 1–3 (IEC 61508:2010)
8 Approval		Without

Technical data

Temperature

Ambient temperature:

Switch (code)	Housing material	
	Polyamide/aluminium	Vestamid/aluminium (ATEX version)
104, 105, 108, 109, 111, R01	-25 — 80 °C	-
207, 213, 220, 222, 305, 306, 320	-25 — 70 °C	-
120, 121, 122, 322	-	Vestamid: -20 — 40 °C Aluminium: -20 — 60 °C
110, 205*, 208, 209, 211, 212, 214	-	-25 — 70 °C

*Switch (code 205) to -20 °C

Storage temperature:

Switch (code)	Housing material	
	Polyamide/aluminium	Vestamid/aluminium (ATEX version)
104, 105, 108, 109, 111, R01	-25 — 80 °C	-
207, 213, 220, 222, 305, 306, 320	-25 — 70 °C	-
120, 121, 122, 322	-	Vestamid: -20 — 40 °C Aluminium: -20 — 60 °C
110, 205*, 208, 209, 211, 212, 214	-	-25 — 70 °C

*Switch (code 205) to -20 °C

Product conformities

EMC Directive: 2014/30/EU

Explosion protection: ATEX (2014/34/EU) and IECEx, order code Special version X

ATEX marking:

Switch: Code 110, 205, 208, 209, 211, 212, 214

Gas: Ⓔx II 2G Ex ia IIC / IIB T6 / T4 Gb
Dust: Ⓔx II 2D Ex ia IIIC T80°C / T110°C Db
Certificate: IBExU 11 ATEX 1154

For the 31MA or 31MB electrical connection, only pilot valves/solenoid valves with the Ex ia type of ignition protection may be used.

Switch: Code 120, 121, 122

Gas: Ⓔx II 2G Ex db eb IIC/IIB T6 Gb
Dust: Ⓔx II 2D Ex tb IIIC T80 °C Db
Certificate: IBExU 12 ATEX 1022 X

Switch: Code 322

Dust: Ⓔx II 2D Ex tb IIIC T80°C Db
Ⓔx II 3D Ex tc IIIC T80°C Dc
Certificate: IBExU 12 ATEX 1022 X

For the 31MA or 31MB electrical connection, only pilot valves/solenoid valves with the Ex d, Ex dm or Ex m for Dust-Ex Ex nA types of ignition protection may be used.

IECEx marking:

Switch: Code 110, 205, 208, 209, 211, 212, 214

Gas: Ⓔx Ex ia IIC/IIB T6/T4 Gb
Dust: Ⓔx Ex ia IIIC T80°C/T110°C Db
Certificate: IECEx IBE 13.0042

For the 31MA or 31MB electrical connection, only pilot valves/solenoid valves with the Ex ia type of ignition protection may be used.

Switch: Code 120, 121, 122

Gas: Ⓔx Ex db eb IIC/IIB T6 Gb
Dust: Ⓔx tb IIIC T80°C Db
Certificate: IECEx IBE 13.0041 X

Switch: Code 322

Dust: Ⓔx Ex tb IIIC T80°C Db
Ⓔx Ex ts IIIC T80°C Dc
Certificate: IECEX IBE 13.0041 X

For the 31MA or 31MB electrical connection, only pilot valves/solenoid valves with the Ex d, Ex dm or Ex m for Dust-Ex Ex nA types of ignition protection may be used.

FMEDA:

Product description:	GEMÜ electrical position indicator LSC
Type of valve:	A
Fail safe function:	The end position is reported at the right time within the defined limits.
HFT (Hardware Fault Tolerance):	0

Further information and calculated values available on request

Mechanical data

Installation position:	Optional
Weight:	780 g
Protection class:	IP66, IP67 (code AE) IP67 (code KK, KE, KM) For outdoor use, the LSC must be equipped with the ordering option “Pressure compensating element”.
Measuring range radial:	0 to 90 °

Electrical data

Electrical connection type:

M12 plug, 5-pin (code 1112)

M12 plug, 8-pin and solenoid valve connection (code 12MA)

M20 x 1.5 cable gland for cables with a diameter of 6 to 12 mm (code 3101)

M20 x 1.5 stainless steel cable gland for cables with a diameter of 6–12 mm (code 3107)

M20 x 1.5 nickel-plated brass cable gland for cables with a diameter of 6–12 mm (code 3112)

M20 x 1.5 cable gland for cables with a diameter of 6 to 12 mm and solenoid valve connection (code 31MA)

M20 x 1.5 plastic cable gland and two solenoid valve connections (code 31 MB)

NPT ½ threaded connection (code 3201)

Two NPT ½ threaded connections (code 32MN)

Hirschmann plug N6RAM (code HM6R)

Harting plug HS25199 with housing Han 3A-EG-QB-M20 and pin Han 7D-STI-C as well as crimp contact R 15-STI-C-1 QMM (AU) (code HM7D)

Harting plug PE-HSM20-8PM with housing Han 3M-eg-QB-M20 and pin Han 8D-M as well as crimp contact R 15-STI-C-1,5 QMM (code HM8D)

Microswitch

Switch type:

Switch (code)	Type
104[2)], 105[2)], 108[2)], 120[2)], 121, 122[2)]	SPDT
110	SPST
109[2)], 111[2)]	DPDT

Rated voltage:

Switch (code)	Rated voltage
104[2)], 105[2)], 109[2)]	250 V AC/24 V DC
120[2)], 122[2)]	Ue: 250 V
110	30 V DC
108[1)2)], 111[1)2)]	Au: 250 V AC; 24 V DC, Ag: 250 V AC; 24 V DC
121	Ue: 30 V

Rated current:

Switch (code)	Current consumption
105[2)], 109[2)]	250 V AC: 10 A, 24 V DC: 2.5 A
108[1)2)], 111[1)2)]	Gold: 250 V AC: 10 A; 24 V DC: 2.5 A Silver: 250 V AC: 0.1 A; 24 V DC: 0.1 A
110	32 mA
104[2)]	250 V AC: 0.1 A; 24 V DC: 0.1 A
120[2)]	Ie: 4 A AC, 400 mA DC
121	Ie: 400 mA AC/DC
122[2)]	Ie: 4 A AC, 150 mA DC

[1)] When switching with stronger signals, the gold evaporates and becomes a silver contact

[2)] When using electrical connection codes 1112 and 12MA, the rated values are reduced to 4 A (60 V AC/DC)

Magnetic reed sensor

Switch type:

Switch (code)	Type
R01	SPDT-CO

Supply voltage:

Switch (code)	Supply voltage
R01	Max. 30 V AC/DC

Current consumption:

Switch (code)	Current consumption
R01	Max. 200 mA

2-wire proximity switch

Switch type:

Switch (code)	Type
205, 208, 209, 211, 212, 214	2-wire NAMUR
207, 213, 220, 222	2-wire, make contact

Supply voltage:

Switch (code)	Supply voltage
205, 208, 209, 211, 212, 214	8.2 V DC
207	5–36 V DC
220	20–250 V AC 10–300 V DC
222	3.7–30 V DC

Current consumption:

Switch (code)	Current consumption
205	≤ 1 mA (damped) ≤ 2.1 mA (undamped)
208, 209, 211, 212, 214	≤ 1 mA (damped) ≤ 3 mA (undamped)
207	Max. 200 mA
213, 220	Max. 100 mA
222	Max. 30 mA

3-wire proximity switch

Switch type:

Switch (code)	Type
305, 306, 322	3-wire, make contact, PNP
320	3-wire, make contact, NPN

Supply voltage:

Switch (code)	Supply voltage
305, 306	10 - 30 V DC
320, 322	10 - 36 V DC

Current consumption:

Switch (code)	Current consumption
305, 320	Max. 200 mA
306	Max. 100 mA
322	Max. 250 mA

Dimensions

Housing/mounting kit material (code KK)

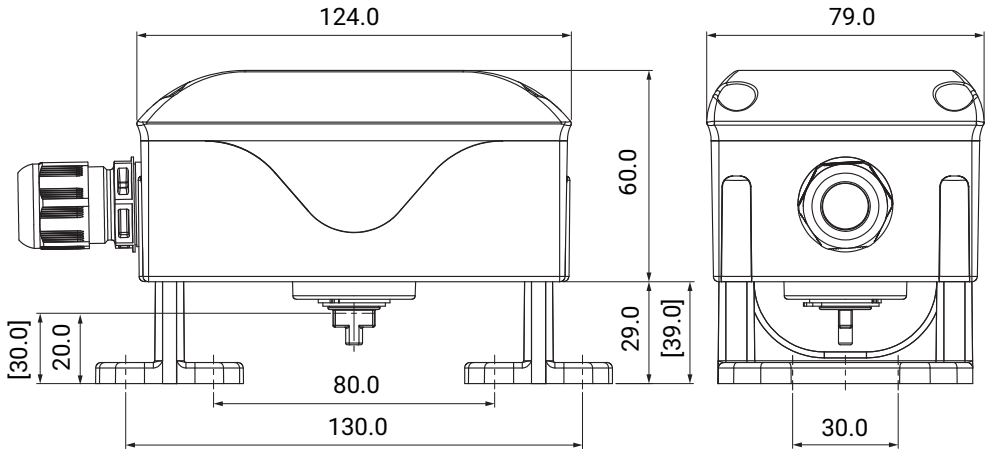

Housing/mounting kit material (code KE, AE)

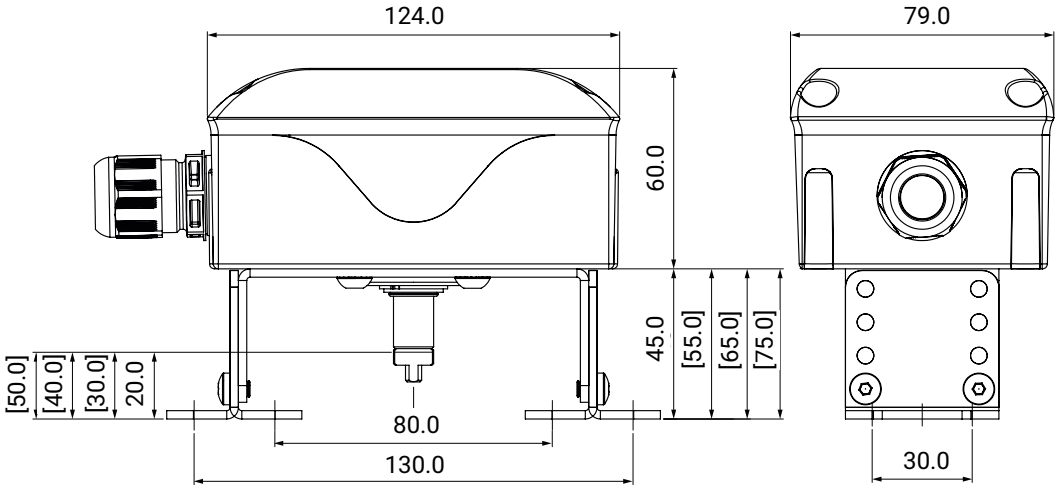

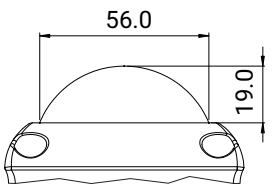

“Option” ordering option, code 3D

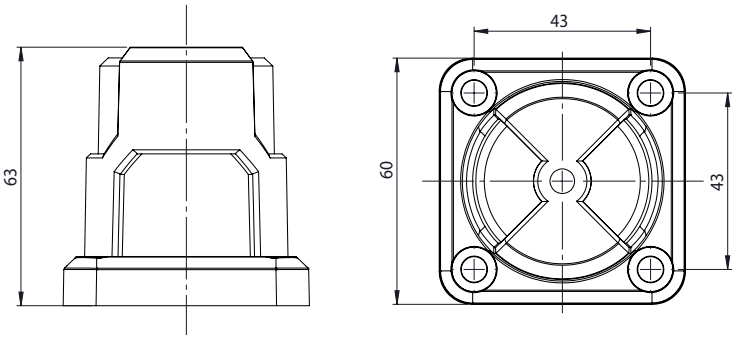

“Option” ordering option, code 4D

Dimensions in mm

Various borehole patterns are available for installation on the pneumatic quarter turn actuators:

Borehole pattern	Housing/mounting kit material (code KK)	Housing/mounting kit material (code KE, AE)
80 x 30 x 20	X	X
80 x 30 x 30	X	X
130 x 30 x 30	X	X
130 x 30 x 50	-	X

For installation on manually operated valves, an LSC with material code KM and mounting kit LSFS01 must be entered. The correct selection is made via the GEMÜ accessories configurator.

Dimensions in mm

Electrical connection

For explosion-proof applications/designs, please observe the information from the "Product conformities" chapter.

Microswitch

SPDT, switch ordering option, code 104, 105, 108

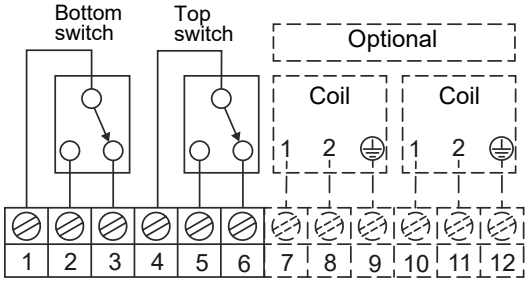

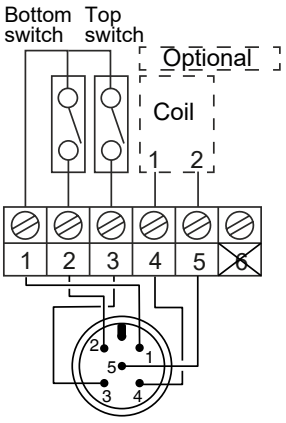

M12 connection options

DPDT, switch ordering option, code 109, 111

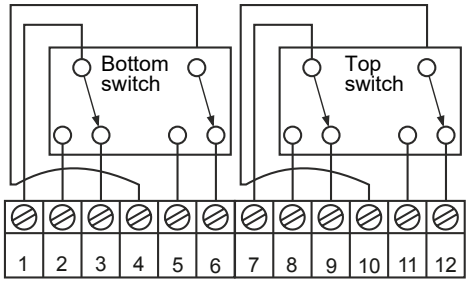

Note: Solenoid valve connection not possible

SPST, switch ordering option, code 110

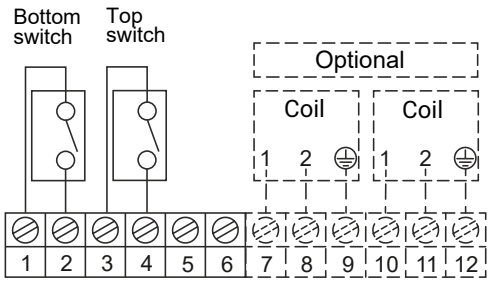

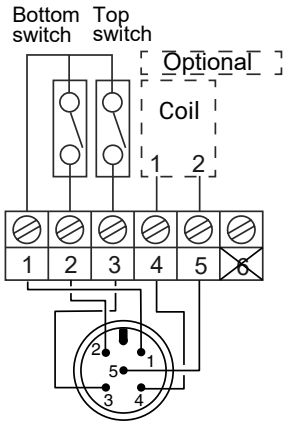

M12 connection options

SPDT, switch ordering option, code 120, 121, 122

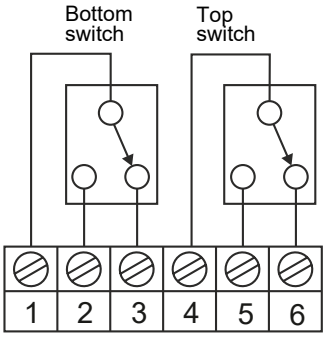

Note: Solenoid valve connection not possible

Magnetic reed sensor

SPDT-CO, switch ordering option, code R01

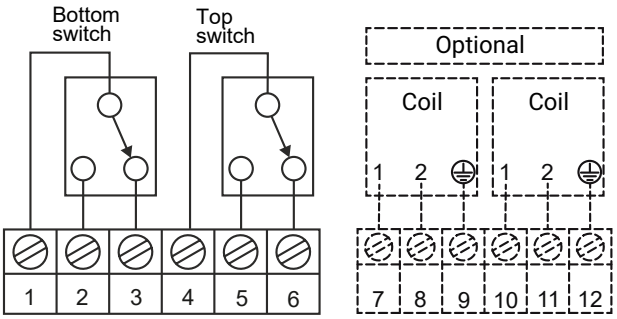

2-wire proximity switch

NAMUR, "Switch" ordering option, code 205, 208, 209, 211

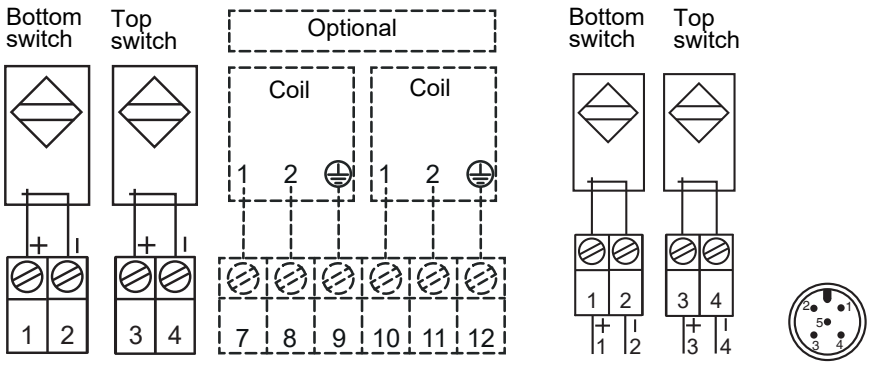

M12 connection options

Make contact, switch ordering option, code 207

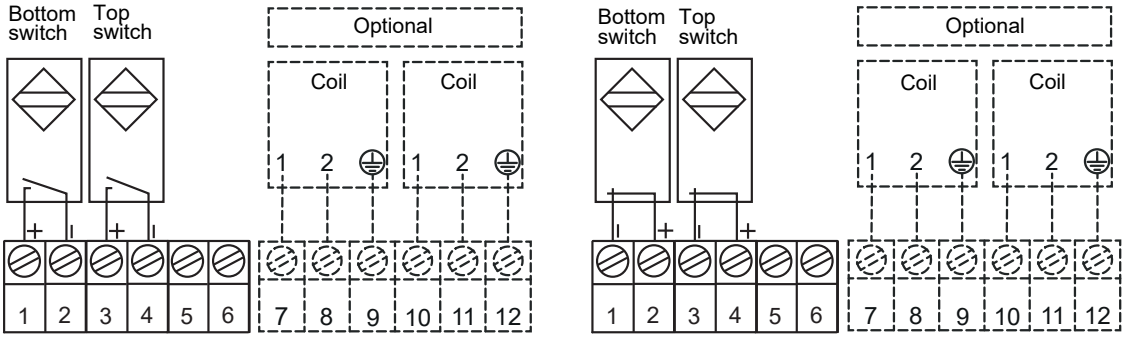

NAMUR, switch ordering option, code 212

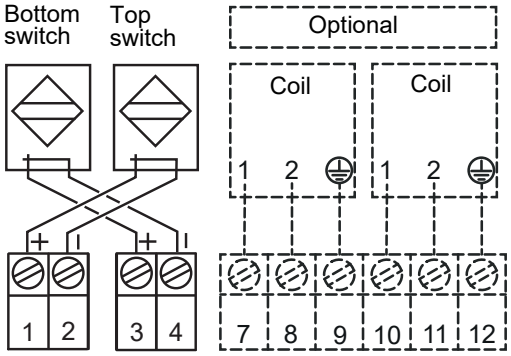

Make contact, switch ordering option, code 213

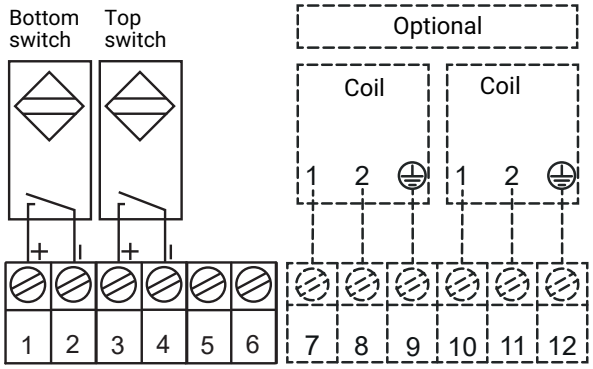

NAMUR with fail safe function, make contact, switch ordering option, code 214

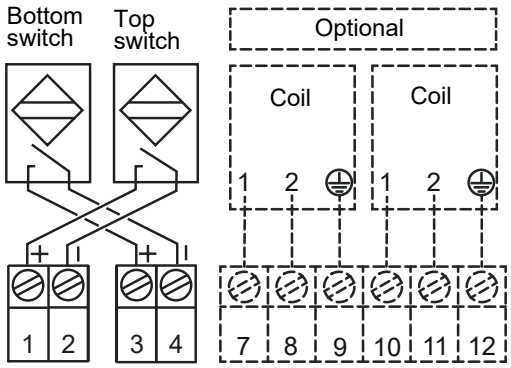

Make contact, AC/DC, switch ordering option, code 220

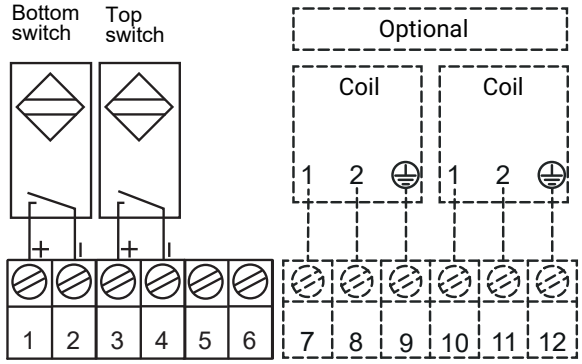

Make contact, switch ordering option, code 222 with Harting plug (HM8D)

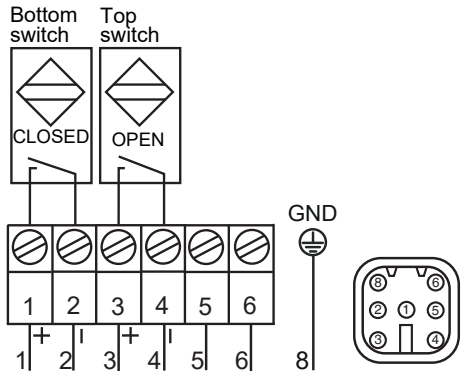

3-wire proximity switch

Make contact, PNP, switch ordering option, code 305

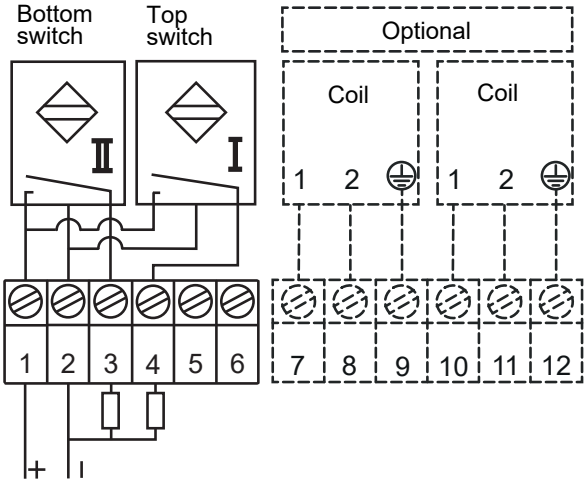

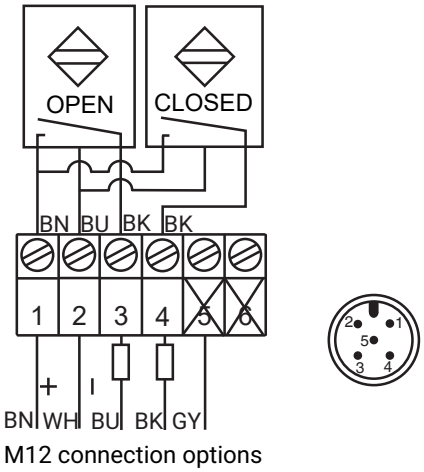

M12 connection options

Make contact, PNP, switch ordering option, code 306, 322

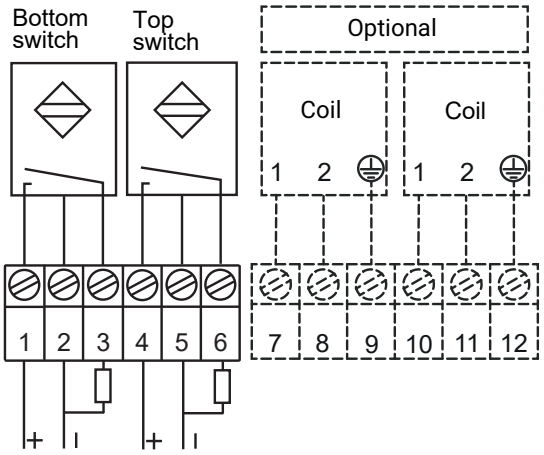

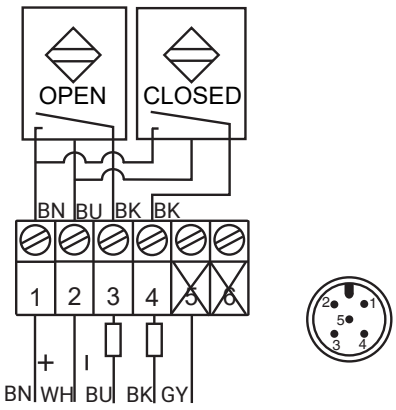

M12 connection options

Make contact, NPN, switch ordering option, code 320

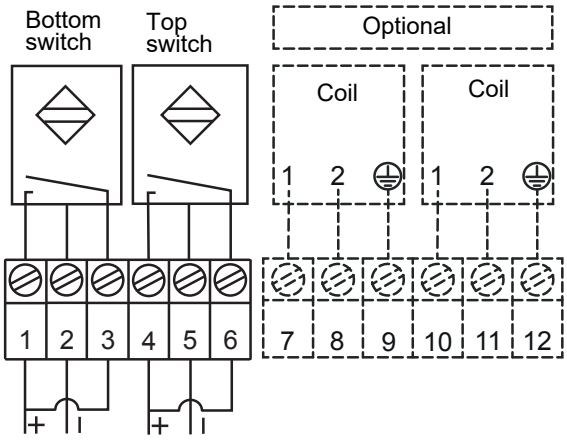

Accessories



GEMÜ LSC S01Z BV

Mounting kit for manually operated ball valves

The mounting kit is suitable for mounting the limit switch box (LSC) on ball valves with hand levers and with a top flange in accordance with ISO 5211.

Nominal size	Flange size	Item number	Order description
DN 8 – 20	F04	88494998	LSCS01Z BV F04
DN 25 – 32	F05	88495013	LSCS01Z BV F05
DN 40 - 50	F07	88495019	LSCS01Z BV F07
DN 65 - 100	F10	88495024	LSCS01Z BV F10
DN 80 - 100	F12*	88582104	LSCS01Z BV F12

Only limit switch boxes which are ordered with the "housing/mounting kit material" order code KM can be installed with this mounting kit.

The ball valve must be ordered with the K-no. 7056.

*) for GEMÜ 711 with connection code 46



GEMÜ LSC S01Z BFV

Mounting kit for manually operated butterfly valves

The mounting kit is suitable for mounting the limit switch box (LSC) on manually operated butterfly valves and with a top flange in accordance with ISO 5211.

Butterfly valves with hand levers

One of the following mounting kits must be ordered for butterfly valves with hand levers:

For GEMÜ type	Nominal size	Flange size	Item number	Order designation
487, R487	DN 25 - 100	F05	88582110	LSCS01Z BFV F05
	DN 125 - 150	F07	88582111	LSCS01Z BFV F07
D487	DN 25 - 200	F07	88582111	LSCS01Z BFV F07
497	DN 25–40	F05	88582110	LSCS01Z BFV F05
	DN 50-150	F07	88582111	LSCS01Z BFV F07

Only limit switch boxes which are ordered with the "housing/mounting kit material" order codes KK, KE or AE can be installed with this mounting kit.

Butterfly valves with gearboxes

No mounting kit is required for butterfly valves with gearboxes. The butterfly valve must be ordered with the K-no. 7042.

Only limit switch boxes which are ordered with the "housing/mounting kit material" order codes KK, KE or AE can be mounted.



Subject to alteration | 11.2026 | 88587338

GEMÜ Gebr. Müller Apparatebau GmbH & Co. KG
Gert-Müller-Platz 1, 74635 Kupferzell, Germany
Phone +49 (0) 7940 1230 · info@gemue.de
www.gemu-group.com